Installation and operating instructions for the CADDY ADVANCED CR wood furnace (PF01021)

Certified according to CSA B415.1-10, CSA B366.1, UL391.

FURNACE MODELS INCLUDED IN THIS MANUAL

WOOD ONLY | Parallel WOOD ADD-ON
(Allowed only in the USA)

Read these instructions carefully before installing and operating your furnace.

CONGRATULATIONS!

You have purchased one of the finest wood furnaces available on the market. We are confident that your furnace will provide years of comfort and safe operation.

Please save these instructions!

Verified and tested for Canada and the United States by an accredited laboratory.

This manual is available for free download on the manufacturer's web site. It is a copyrighted document. Re-sale is strictly prohibited. The manufacturer may update this manual from time to time and cannot be responsible for problems, injuries, or damages arising out of the use of information contained in any manual obtained from unauthorized sources.

Eco-energy at the hearth of your home

Caddy
250, de Copenhague,
St-Augustin-de-Desmaures (Québec)
CANADA G3A 2H3

Printed in Canada

46366A
2026-08-20

TABLE OF CONTENT

1 INTRODUCTION **4**
2 APPLIANCE PERFORMANCE (1) **5**
3 GENERAL FEATURES **6**
4 SPECIFICATIONS **7**
5 LABELS **8**
6 TECHNICAL DATA **10**
7 FURNACE DIMENSIONS **10**
8 CHIMNEY AND DRAFT **12**
9 SAFETY RULES **12**
9.1 GENERAL REQUIREMENTS 12
9.2 ODOUR FROM THE PAINT 12
9.3 ASH DISPOSAL 12
9.4 CREOSOTE BUILD-UP AND REMOVAL 12
9.5 SMOKE DETECTOR 13
9.6 ASH DRAWER 13
9.7 ASH GRATE 13
9.8 ADDITIONAL FRESH AIR SUPPLY 13
10 FIREWOOD **15**
CADDY ADVANCED CR WOOD FURNACE OR PARALLEL ADD-ON PF01021 ..... **17**
11 INSTALLATION INSTRUCTIONS **18**
11.1 BLOWER INSTALLATION 18
11.2 HOT AIR PLENUM TEMPERATURE PROBE INSTALLATION AND CONNECTION (RTD) 18
11.3 UNIT LOCATION 19
11.4 MINIMUM CLEARANCES TO COMBUSTIBLE MATERIALS AND FLOOR PROTECTION 20
11.4.1 MINIMUM CLEARANCES TO COMBUSTIBLE MATERIALS 20
11.4.2 MINIMUM CLEARANCES TO COMBUSTIBLES MATERIALS FOR AIR RETURN DUCT 21
11.4.3 MINIMUM CLEARANCES TO COMBUSTIBLES MATERIALS FOR HOT AIR PLENUM 21
11.4.4 FLOOR PROTECTION 21
11.5 STOVE PIPE CONNECTION 22
11.6 ELECTRICAL CONNECTIONS 24
11.7 FRESH AIR SUPPLY INSTALLATION 25
11.8 TOOL HOLDER INSTALLATION 26
11.9 HOT AIR PLENUM 27
12 PARALLEL INSTALLATION **27**
13 HEATPUMP / AIR CLIMATIZATION INSTALLATION **29**
14 ELECTRICAL ELEMENT PA01106 INSTALLATION **31**
15 GAS FURNACE INSTALLATION **32**
16 THERMOSTAT INSTALLATION **33**
16.1 WOOD FURNACE ONLY 33
16.2 PARALLEL ADD-ON 36
17 FURNACE OPERATION **38**
17.1 HOW IT WORKS 38
17.2 HOW RELOAD BUTTON WORKS 38
17.3 HOW TO LIGHT AND RELOAD THE FURNACE 39
17.3.1 COLD START AND COAL EMBER BED LIGHTING (The led button light is OFF) 40
17.3.2 HOT EMBER BED RELOAD (The led button light is ON or slowly blinking) 41
17.4 YOUR FIRST FIRES 41
17.5 LIGHTING FIRES 42
17.5.1 CONVENTIONAL FIRE STARTING 42
17.5.2 THE TOP-DOWN FIRE 42
17.5.3 TWO PARALLEL LOGS 42
17.5.4 USING FIRE STARTERS 42
18 MAINTAINING WOOD FIRES **43**
18.1 GENERAL ADVICE 43
18.1.1 RAKING EMBERS 43
18.1.2 RELOADING WITH EMBERS 44

18.1.3 CONTROL OF THE AIR SUPPLY ... 44
18.1.4 BUILDING DIFFERENT FIRES FOR DIFFERENT NEEDS ... 44
18.1.5 SMALL FIRES TO TAKE THE CHILL OUT OF THE HOME ... 44
18.1.6 LONG LASTING LOW OUTPUT FIRES ... 44
18.1.7 HIGH OUTPUT FIRES FOR COLD WEATHER ... 44
18.1.8 MAXIMUM BURN CYCLE TIMES ... 44
18.2 PROLONGED POWER OUTAGE ... 45
19 THE VENTING SYSTEM ... 45
19.1 GENERAL ... 45
19.2 SUITABLE CHIMNEYS ... 45
19.3 FACTORY-BUILT METAL CHIMNEYS ... 46
19.3.1 MASONRY CHIMNEYS ... 46
19.4 MINIMUM CHIMNEY HEIGHT ... 47
19.5 CHIMNEY LOCATION ... 47
19.6 SUPPLY OF COMBUSTION AIR ... 48
19.6.1 Conventional Home ... 49
19.7 INSTALLING THE CHIMNEY CONNECTOR ... 49
19.7.1 INSTALLATION OF SINGLE WALL CHIMNEY CONNECTOR ... 50
20 FURNACE MAINTENANCE ... 52
20.1 ASH REMOVAL ... 52
20.2 CLEANING DOOR GLASS ... 54
20.3 DOOR ADJUSTMENT ... 54
20.4 REPLACEMENT OF GLASS AND GASKETS ... 55
20.5 MAINTENANCE OF FURNACE EXTERIOR FINISH ... 56
20.6 HEAT EXCHANGERS CARE ... 57
20.7 THERMOCOUPLES CARE ... 60
20.8 CHIMNEY MAINTENANCE ... 61
20.9 REFRACTORY BRICK INSPECTION ... 61
20.10 SMOKE PIPE INSPECTION ... 62
20.11 BLOWER MOTOR MAINTENANCE ... 62
20.12 INSTALLATION OF SECONDARY AIR TUBES AND BAFFLE ... 62
21 1IN FILTER ADAPTER ... 63
22 TROUBLESHOOTING ... 64
23 OPTIONAL ACCESSORIES ... 66
24 EXPLODED DIAGRAM AND PARTS LIST ... 67
25 ELECTRICAL DIAGRAM ... 83
25.1 BLOWER HOUSING WITH REGULAR MOTOR ... 83
25.2 BLOWER HOUSING WITH ECM MOTOR ... 84
26 WHY PURCHASE THROUGH AN AUTHORIZED CADDY DEALER? ... 85
CADDY LIMITED WARRANTY ... 86

IMPORTANT NOTE

This furnace and its hot air duct system must be sold and installed by a professional. In the absence of a professional installer, the manufacturer reserves the right to void its warranty or to refuse any technical support.

REGISTER YOU WARRANTY ONLINE

To receive full warranty coverage, you will need to show evidence of the date you purchased your furnace. Keep your sales invoice. We also recommend that you register your warranty online at: https://www.caddyfurnaces.com/en/warranty/warranty-registration

Registering your warranty online will help us to rapidly find the information needed about your furnace.

For support purposes and to improve your customer experience, you can connect your Caddy CR furnace to the wireless network where it is installed. Follow the manual (46398) given with the CADDY ADVANCED CR furnace.

1 INTRODUCTION

This furnace uses the *Dual Fire*© technology with a two-stage electronic combustion control. Find peace of mind with a self-regulated combustion that allows easy ignition. Its automated air supply and self regulated systems synchronize with your thermostat to offer additional safety, optimize comfort, and reduce emissions with minimal maintenance. This model meets the emissions limits of CSA B415.1-10 Standard and EPA 40CFR Part 60, subpart QQQQ (2020 limit).

To optimize the efficiency of your furnace, here is some advice that you should follow when installing or operating your Caddy Advanced CR.

- Respect the local codes (when in doubt, consult your local dealer).
- Make sure your furnace is installed according to the instructions on the certification label.

All control must be adjusted by a qualified technician. Adjustment of controls and blower speed must comply with CMMTQ recommendations, while respecting the recommended static pressure ranges in the furnace's hot air plenum. We recommend that our wood heating products be installed and serviced by professionals certified in the USA by the NFI (National Fireplace Institute®) or in Canada by WETT (Wood Energy Technology Transfer) or in Quebec by the APC (Association des Professionnels du Chauffage). **This furnace has been developed and built for residential heating. Commercial and industrial use is prohibited and will void the warranty.**

2 APPLIANCE PERFORMANCE (1)

Fuel type	Dry cordwood	
Recommended heating area [*]	1,000 to 2,500 ft² (93 à 232 m²)	
Combustion chamber volume	3.6 ft³ (0.102 m³)	
Maximum burn time [*]	10 h	
Maximum input capacity (dry cordwood) (2)	310,000 BTU	
Overall heat output rate (min. to max.) (3)	19,354 BTU/h to 47,052 BTU/h (5.6 kW to 13.8 kW)	
Average overall efficiency (8)	76.6% (HHV)(5)	82.0% (LHV)(6)
Delivered heat output rate (min. to max.) (7)	13,297 BTU/h to 42,234 BTU/h (3.9 kW to 12.4 kW)	
Average delivered efficiency (4)	60.7% (HHV)(5)	65.0% (LHV)(6)
Optimum overall efficiency (9)	83.2%	
Optimum heat transfer efficiency (14)	81%	
Average particulate emissions rate (10)(11)	0.095 lb/mm BTU (0.041 g/MJ)	
Average CO (12)	8.78 lb/mm BTU (3.78 g/MJ)	
Average electrical power consumption (13)	330 W (PSC blower at 0.2" WC) and 220 W (ECM blower at 0.2" WC)	

[*] Recommended heating area and maximum burn time may vary subject to furnace location in home, chimney draft, heat loss factors, climate, fuel type and other variables. The recommended heating area for a given appliance is defined by the manufacturer as its capacity to maintain a minimum acceptable temperature considering that the space configuration and the presence of heat distribution systems have a significant impact in making heat circulation optimum.

(1) Values as certified to CSA B415.1-10, except for recommended heating area, combustion chamber volume, maximum burn time and maximum input capacity. Performances based on a fuel load prescribed by the standard at 10 lb./ft³ and with moisture content between 18% and 28%.

(2) Input value at 10lb/ft³ fuel loading density and dry energy value of 8,600BTU/lb.

(3) Overall: Radiated and delivered heat together at10lb/ft³ fuel loading density over one total burn cycle.

(4) Efficiency based on delivered heat when allowing cycling from high to low burn to simulate thermostat demand.

(5) Higher Heating Value of the fuel.

(6) Lower Heating Value of the fuel.

(7) Delivered: Remotely provided to other rooms through ducting at 10 lb./ft³ fuel loading density over one total burn cycle.

(8) Efficiency based on radiated and delivered heat when allowing cycling from high to low burn to simulate thermostat demand.

(9) Optimum overall efficiency at a specific burn rate (LHV).

(10) Based on delivered heat output.

(11) This appliance is officially tested and certified by an independent agency.

(12) Carbon Monoxide. Based on overall heat output at 10lb/ft³ fuel loading density.

(13) Unless stated otherwise, measures were taken directly at the main power source and include all electrical components present in the appliance.

(14) The optimum heat transfer efficiency is for the low burn rate and represents the appliance's ability to convert the energy contained in the wood logs into energy transferred to the room in the form of heat and does not consider the chemical losses during combustion.

3 GENERAL FEATURES

Maximum log length	21 in (533 mm) / north-south**
Diameter of the flue collar	6 in (152 mm)
Recommended connector pipe diameter	6 in (152 mm)
Recommended chimney diameter	6 in (152 mm)
Required type of chimney	CAN/ULC S629, UL 103 HT (2100 °F)
Baffle material	C-Cast or equivalent
Alcove installation	Not approved
Mobile home installation‡	Not approved
Weight (without option)	635 (288 kg)
Shipping weight (without option)	705 lb (320 kg)
PSC Blower: PA08581 (wood only)	1/3 HP, direct drive, 1 speed, up to 875 CFM
ECM Blower: PA08582 (wood only)	1/2 HP, direct drive, 1 speed, up to 875 CFM
Filter - dimensions (Width x Height x Depth) (included with optional blower assembly)	14 in x 25 in x 2 in (356 mm x 635 mm x 51 mm)
Filter - quantity	1
Particulate emission standard	EPA / CSA B415.1-10
USA standard (safety)	UL 391
Canadian standard (safety)	CSA B366.1

*** East-west: through the door you see the longitudinal sides of the logs; north-south: through the door you see the tips of the logs.*

‡ *Mobile home (Canada) or manufactured home (U.S.): The U.S. Department of Housing and Urban Development describes "prefabricated homes" better known as "mobile homes" as follows; buildings constructed on fixed wheels and those transported on temporary wheels/axles installed on a permanent foundation. In Canada, a mobile home is a dwelling in which the assembly of each component is completed or substantially completed before the dwelling is moved to a location to be placed on a foundation, connected to service facilities and which meets the CAN/CSA-Z240 MH standard.*

4 SPECIFICATIONS

Color	Grey and black
Thermostatic control	Yes
Door type	Single, glass with cast iron frame
Glass type	Ceramic glass
Air return plenum - dimensions (Depth or Height)	15 3/4 in
Air return plenum - dimension (Width)	24 3/4 in
Hot air plenum - dimensions (Depth or Height)	28 5/8 in
Hot air plenum - dimension (Width)	24 1/2 in
Ash pan - dimensions (Width x Depth x Height)	13 5/8 in x 20 1/2 in x 4 in
Clearance - front	48 in
Clearance - back wall	24 in from the blower housing recommended service clearance
Clearance - side wall	6 in
Clearance - side wall	24 in recommended service clearance
Clearances - ducts	6 in for the first 6 feet and 1 in after
Clearance - recommended for maintenance on left side	24 in
Top cold air plenum option - material	Galvanized steel
Top cold air plenum option - dimensions (Width x Depth x Height)	24 7/8 in W x 15 7/8 in D x 10 3/4 in H
Top cold air plenum option - smoke pipe diameter	6 in
Fresh air intake adapter option	5 in
Fresh air intake adapter - connection location	Left or right
Tested and listed as per applicable standards	By an accredited laboratory (CAN/USA)
Warranty	Limited lifetime

5 LABELS

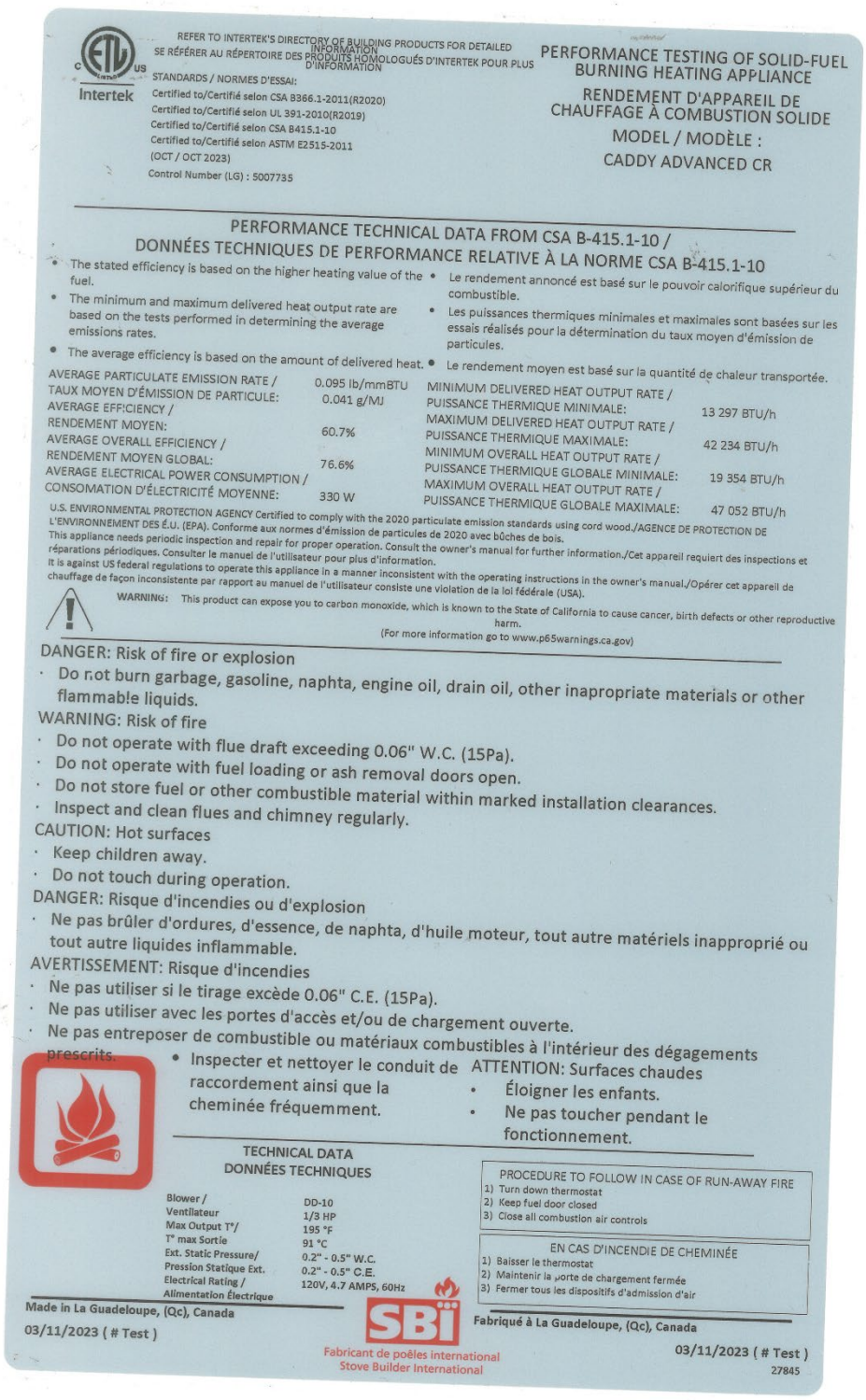

REFER TO INTERTEK'S DIRECTORY OF BUILDING PRODUCTS FOR DETAILED INFORMATION
SE RÉFÉRER AU RÉPERTOIRE DES PRODUITS HOMOLOGUÉS D'INTERTEK POUR PLUS D'INFORMATION

Intertek

STANDARDS / NORMES D'ESSAI:
Certified to/Certifié selon CSA B366.1-2011(R2020)
Certified to/Certifié selon UL 391-2010(R2019)
Certified to/Certifié selon CSA B415.1-10
Certified to/Certifié selon ASTM E2515-2011
(OCT / OCT 2023)
Control Number (LG) : 5007735

PERFORMANCE TESTING OF SOLID-FUEL BURNING HEATING APPLIANCE
RENDEMENT D'APPAREIL DE CHAUFFAGE À COMBUSTION SOLIDE
MODEL / MODÈLE :
CADDY ADVANCED CR

PERFORMANCE TECHNICAL DATA FROM CSA B-415.1-10 /
DONNÉES TECHNIQUES DE PERFORMANCE RELATIVE À LA NORME CSA B-415.1-10

- The stated efficiency is based on the higher heating value of the fuel.
- The minimum and maximum delivered heat output rate are based on the tests performed in determining the average emissions rates.
- The average efficiency is based on the amount of delivered heat.

- Le rendement annoncé est basé sur le pouvoir calorifique supérieur du combustible.
- Les puissances thermiques minimales et maximales sont basées sur les essais réalisés pour la détermination du taux moyen d'émission de particules.
- Le rendement moyen est basé sur la quantité de chaleur transportée.

AVERAGE PARTICULATE EMISSION RATE / TAUX MOYEN D'ÉMISSION DE PARTICULE:	0.095 lb/mmBTU 0.041 g/MJ
AVERAGE EFFICIENCY / RENDEMENT MOYEN:	60.7%
AVERAGE OVERALL EFFICIENCY / RENDEMENT MOYEN GLOBAL:	76.6%
AVERAGE ELECTRICAL POWER CONSUMPTION / CONSOMATION D'ÉLECTRICITÉ MOYENNE:	330 W
MINIMUM DELIVERED HEAT OUTPUT RATE / PUISSANCE THERMIQUE MINIMALE:	13 297 BTU/h
MAXIMUM DELIVERED HEAT OUTPUT RATE / PUISSANCE THERMIQUE MAXIMALE:	42 234 BTU/h
MINIMUM OVERALL HEAT OUTPUT RATE / PUISSANCE THERMIQUE GLOBALE MINIMALE:	19 354 BTU/h
MAXIMUM OVERALL HEAT OUTPUT RATE / PUISSANCE THERMIQUE GLOBALE MAXIMALE:	47 052 BTU/h

U.S. ENVIRONMENTAL PROTECTION AGENCY Certified to comply with the 2020 particulate emission standards using cord wood./AGENCE DE PROTECTION DE L'ENVIRONNEMENT DES É.U. (EPA). Conforme aux normes d'émission de particules de 2020 avec bûches de bois.
This appliance needs periodic inspection and repair for proper operation. Consult the owner's manual for further information./Cet appareil requiert des inspections et réparations périodiques. Consulter le manuel de l'utilisateur pour plus d'information.
It is against US federal regulations to operate this appliance in a manner inconsistent with the operating instructions in the owner's manual./Opérer cet appareil de chauffage de façon inconsistente par rapport au manuel de l'utilisateur consiste une violation de la loi fédérale (USA).

WARNING: This product can expose you to carbon monoxide, which is known to the State of California to cause cancer, birth defects or other reproductive harm.
(For more information go to www.p65warnings.ca.gov)

DANGER: Risk of fire or explosion
- Do not burn garbage, gasoline, naphta, engine oil, drain oil, other inapropriate materials or other flammable liquids.

WARNING: Risk of fire
- Do not operate with flue draft exceeding 0.06" W.C. (15Pa).
- Do not operate with fuel loading or ash removal doors open.
- Do not store fuel or other combustible material within marked installation clearances.
- Inspect and clean flues and chimney regularly.

CAUTION: Hot surfaces
- Keep children away.
- Do not touch during operation.

DANGER: Risque d'incendies ou d'explosion
- Ne pas brûler d'ordures, d'essence, de naphta, d'huile moteur, tout autre matériels inapproprié ou tout autre liquides inflammable.

AVERTISSEMENT: Risque d'incendies
- Ne pas utiliser si le tirage excède 0.06" C.E. (15Pa).
- Ne pas utiliser avec les portes d'accès et/ou de chargement ouverte.
- Ne pas entreposer de combustible ou matériaux combustibles à l'intérieur des dégagements prescrits.
- Inspecter et nettoyer le conduit de raccordement ainsi que la cheminée fréquemment.

ATTENTION: Surfaces chaudes
- Éloigner les enfants.
- Ne pas toucher pendant le fonctionnement.

TECHNICAL DATA
DONNÉES TECHNIQUES

Blower / Ventilateur	DD-10 1/3 HP
Max Output T°/ T° max Sortie	195 °F 91 °C
Ext. Static Pressure/ Pression Statique Ext.	0.2" - 0.5" W.C. 0.2" - 0.5" C.E.
Electrical Rating / Alimentation Électrique	120V, 4.7 AMPS, 60Hz

PROCEDURE TO FOLLOW IN CASE OF RUN-AWAY FIRE
1) Turn down thermostat
2) Keep fuel door closed
3) Close all combustion air controls

EN CAS D'INCENDIE DE CHEMINÉE
1) Baisser le thermostat
2) Maintenir la porte de chargement fermée
3) Fermer tous les dispositifs d'admission d'air

Made in La Guadeloupe, (Qc), Canada
03/11/2023 (# Test)

SBI
Fabricant de poêles international
Stove Builder International

Fabriqué à La Guadeloupe, (Qc), Canada
03/11/2023 (# Test)
27845

LISTED STAND ALONE WOOD FURNACE
FOURNAISE AU BOIS HOMOLOGUÉE

Intertek

FOR USE WITH WOOD ONLY

POUR UTILISATION AVEC BOIS SEULEMENT

CONTACT LOCAL BUILDING OFFICIALS ABOUT THE RESTRICTIONS AND INSTALLATION INSPECTION IN YOUR AREA.

COMMUNIQUER AVEC LES AUTORITÉS LOCALES DU BÂTIMENT ET DE LA PRÉVENTION DES INCENDIES AU SUJET DES RESTRICTIONS D'INSTALLATION DANS VOTRE SECTEUR.

FUEL / COMBUSTIBLE : WOOD / BOIS
AC CURRENT ONLY / COURANT CA SEULEMENT

STANDARDS / NORMES D'ESSAI:
Certified to/Certifié selon CSA B366.1-2011(R2020)
Certified to/Certifié selon UL 391-2010(R2019)
Certified to/Certifié selon CSA B415.1-10
Certified to/Certifié selon ASTM E2515-2011
(OCT / OCT 2023)
Control Number (LG) : 5007735

MODEL / MODÈLE :
CADDY ADVANCED CR

Serial Number
No. de Série **999**

MINIMUM CLEARANCES TO COMBUSTIBLE MATERIALS / DÉGAGEMENTS MINIMUM AUX MATÉRIAUX COMBUSTIBLES

WITH SINGLE WALL CONNECTOR / AVEC TUYAU À PAROI SIMPLE		WITH DOUBLE WALL CONNECTOR / AVEC TUYAU À PAROI DOUBLE	
Ceiling (1st 6 feet of	6 in	Ceiling (1st 6 feet of	6 po
Plafond (1er 6 pieds de	152 mm	Plafond (1er 6 pieds de	152 mm
ductwork including plenum) :	1 in	ductwork including plenum) :	1 po
conduit incluant le bonnet) :	25 mm	conduit incluant le bonnet) :	25 mm
Back Wall (from blower box):	5 in	Back Wall (from blower box):	5 po
Mur arrière (du boîtier du ventilateur):	127 mm	Mur arrière (du boîtier du ventilateur):	127 mm
Front Wall :	48 in	Front Wall:	48 po
Mur avant:	1219 mm	Mur avant :	1219 mm
Right Side Wall :	6 in	Right Side Wall:	6 po
Mur latéral droit:	152 mm	Mur latéral droit :	152 mm
Left Side Wall :	24 in	Left Side Wall:	24 po
Mur latéral gauche:	610 mm	Mur latéral gauche :	610 mm
Floor :	0 in	Floor:	0 po
Plancher:	0 mm	Plancher :	0 mm
Flue Pipe :	18 in	Flue Pipe:	18 po
Tuyau à fumée:	457 mm	Tuyau à fumée :	457 mm

INSTALL AND USE ONLY IN ACCORDANCE WITH SBI STOVE BUILDER INTERNATIONAL INSTALLATION AND OPERATION INSTRUCTIONS.
L'INSTALLATION ET L'OPERATION DOIT SE FAIRE SELON LES INSTRUCTIONS D'INSTALLATION ET D'UTILISATION DE SBI FABRICANT DE POÊLES INTERNATIONAL.

PREVENT HOUSE FIRES

- Type of chimney: chimney suitable for use with solid fuel.
- Use with wood only. Do not use other fuels.
- Load fuel carefully, or damage may results.
- Do not use chemicals or fluids to start the fire.
- The heat exchanger, flue pipe and chimney must be cleaned regularly to remove accumulated creosote and ash. Ensure that the heat exchanger, flue pipe and chimney are cleaned during the summer months. The appliance, flue pipe and chimney must be in good condition.
- Do not use this furnace without ducts.
- In the USA, the unit must be installed on a non-combustible floor pad extending at least 16 inches (410 mm) in front of the door opening and at least 8 inches (205 mm) on each side of the door opening. In Canada, the unit must be installed on a non-combustible floor pad extending at least 18 inches (460 mm) in front of the door opening and at least 8 inches (205 mm) at the back and on each side of the unit. The floor pad must have a thickness of at least 0.015" (0.38mm). Consult owner's manual for more details.
- May be connected to ductwork that is still connected to another furnace.

Do not connect this unit to a chimney flue serving another appliance.

- Do not connect ductwork so that reverse flow is possible.
- Do not relocate or bypass any of the safety controls in the original furnace installation.
- Caution: Maintain combustion air to the unit, air starvation is dangerous.

- **The furnace can be used during a power-loss. Remove air filter and let the damper stay in closed position. See owner's manual for optimum performance under those conditions.**

- Do not attempt to light a fire when there is oil vapor present.
- See owner's manual for electrical diagram.
- This furnace is to be operated only by a competent attendant.
- For more information, refer to owner's manual.

PRÉVENEZ LES INCENDIES

- Type de cheminée: cheminée conçue pour utilisation avec combustible solide.
- Brûler du bois seulement. Ne pas utiliser d'autres combustibles.
- Charger avec soin pour éviter d'endommager la fournaise.
- N'utiliser aucun produit chimique ou liquide pour allumer le feu.
- Nettoyer l'échangeur de chaleur, le conduit de raccordement et la cheminée pour enlever la créosote et les cendres accumulées. S'assurer que l'échangeur de chaleur, le conduit de raccordement et la cheminée sont nettoyés à la fin de la saison hivernale. L'appareil, le conduit de raccordement et la cheminée doivent être en bon état.
- Ne pas utiliser cette fournaise sans conduit.
- Aux USA, l'appareil doit être installé sur une plaque incombustible qui excède le devant de l'ouverture de porte d'au moins 16 pouces (410 mm) ainsi que chaque côté de l'ouverture de porte d'au moins 8 pouces (205 mm). Au Canada, l'appareil doit être installé sur une plaque incombustible qui excède le devant de l'ouverture de porte d'au moins 18 pouces (460 mm) ainsi que l'arrière et chaque côté de l'appareil d'au moins 8 pouces (205 mm). La plaque incombustible doit posséder une épaisseur minimale de 0.015" (0.38 mm). Consultez le manuel d'instructions pour plus de détails.
- Peut-être raccordé à des conduits raccordés à un autre générateur d'air chaud.

Ne pas brancher cette unité à une cheminée servant à un autre appareil.

- Ne pas raccorder aux conduits de ventilation de façon à permettre un débit inversé.
- Ne pas relocaliser ou contourner les contrôles de sécurité originaux de la fournaise.
- Attention: Assurer l'air de combustion adéquate à l'appareil, une privation d'air est dangereuse.

Cette fournaise peut être utilisée lors d'une panne de courant. Le filtre à air doit être retiré et le registre d'entrée d'air doit être laissé fermé. Voir le manuel d'instructions pour des performances optimales dans ces conditions.

- Ne pas allumer losrque des vapeurs d'huile sont présentes.
- Voir le manuel d'instructions pour les diagrammes électriques.
- Cette fournaise doit être opéré uniquement par une personne compétente.
- Pour de plus amples renseignements, référez-vous au manuel d'instructions.

Made in La Guadeloupe, (Qc), Canada
03/11/2023 (# Test)

SBI
Fabricant de poêles international
Stove Builder International

Fabriqué à La Guadeloupe, (Qc), Canada
03/11/2023 (# Test)

27844

6 TECHNICAL DATA

MODEL	(DIRECT DRIVE)			THEORETICAL DEBIT	TEMPERATURE VARIATION	STATIC PRESSURE		FILTER
CADDY ADVANCED CR WITH BLOWER / CADDY ADVANCED CR ADD-ON (PARALLEL)	BLOWER	MOTOR	SPEED	(CFM)	(°F)	MIN.	MAX.	(1)
						H2O		
	DD-10	1/3 PSC 1/2 ECM	1	875	55	0,2	0,5	25" x 14" x 2"

7 FURNACE DIMENSIONS

CADDY ADVANCED CR WITH BLOWER

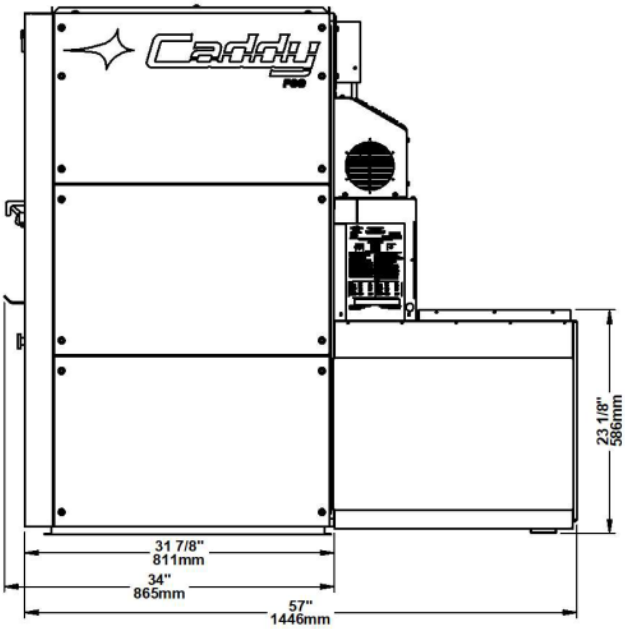

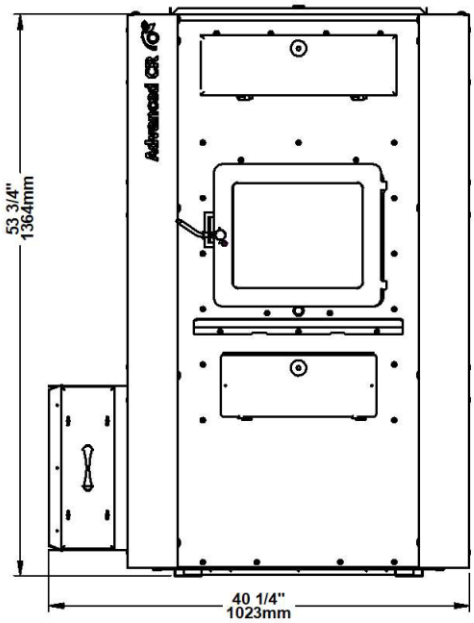

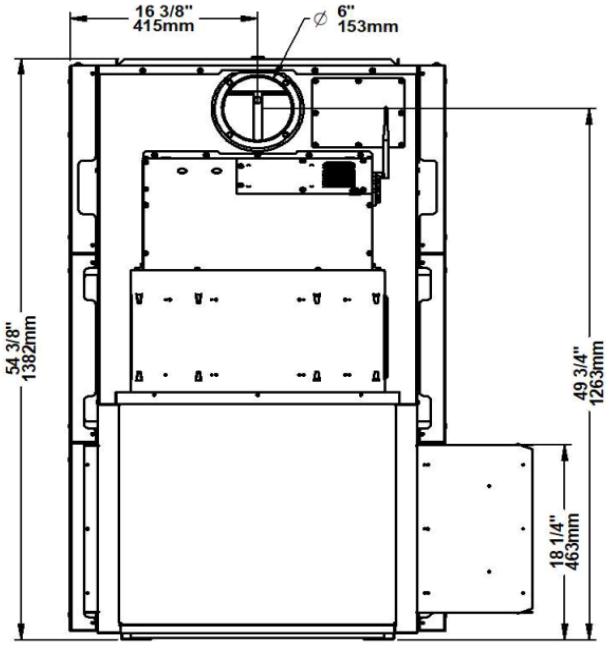

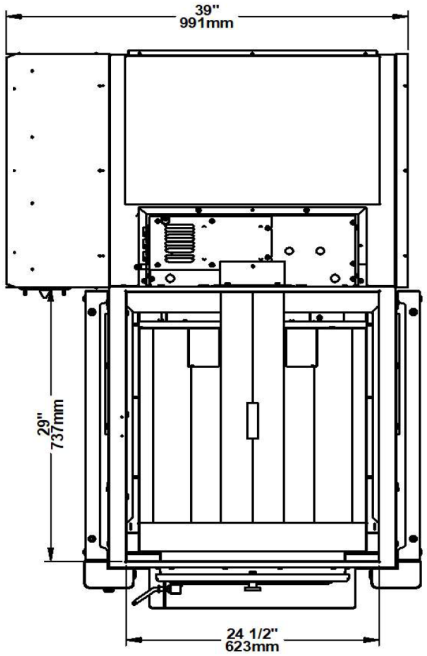

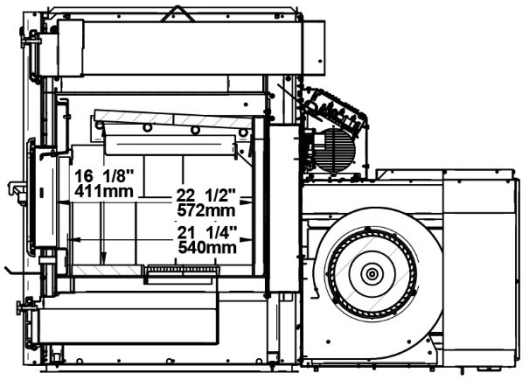

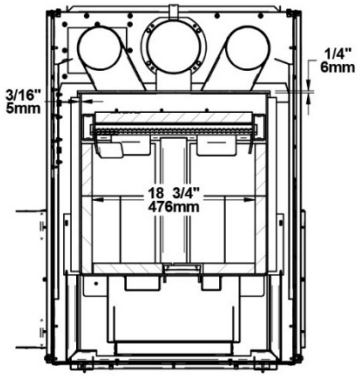

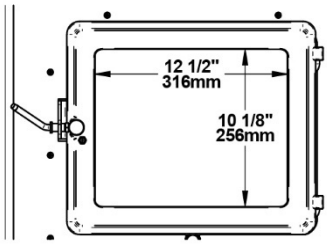

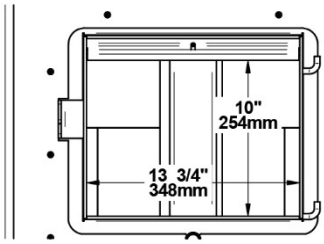

) CADDY ADVANCED CR WITH BLOWER EXTENSION (PA08587)

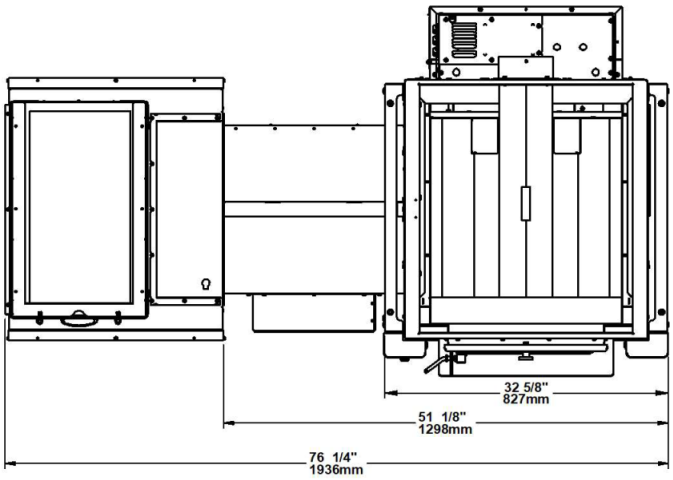

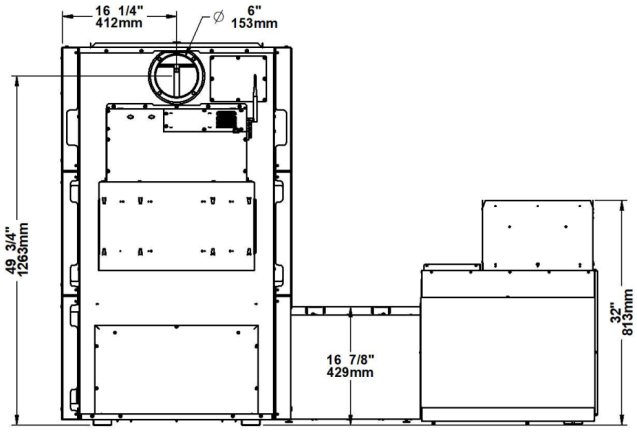

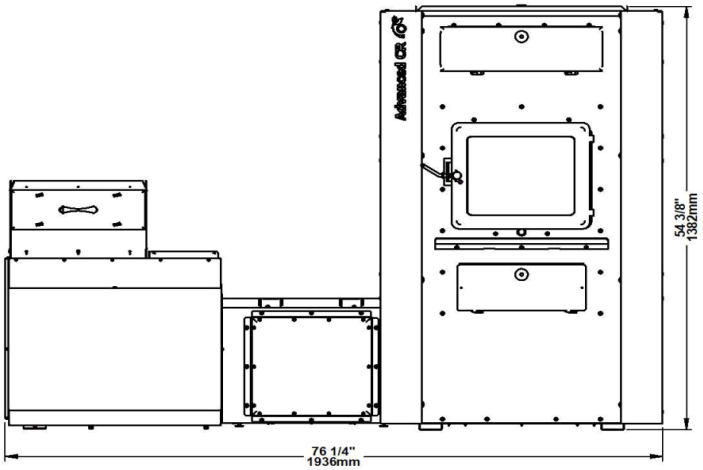

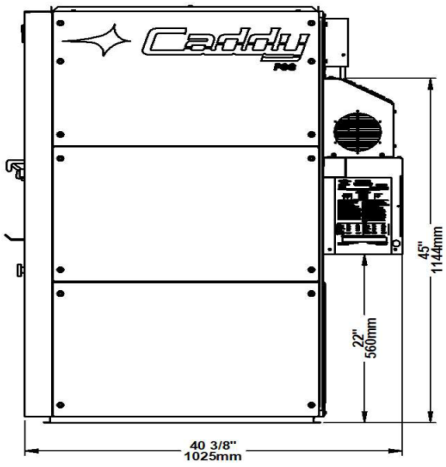

8 CHIMNEY AND DRAFT

This furnace must be connected to a chimney certified for use with wood burning heating appliances, a 6-inch diameter chimney is recommended.

The unit is not to be connected to a chimney being used by another appliance. If the chimney draft exceeds 0.06 IN.W.C., install the barometric draft control that is supplied with the appliance. **Never install a manual damper**. The barometric draft control must be adjusted so that the maximum draft measured at the furnace outlet does not exceed 0.06 IN.W.C. Excessive chimney draft can overheat the appliance and reduce burn time. On the other hand, a lack of draft can lead to poor combustion and backdrafts.

9 SAFETY RULES

WARNING! THE INFORMATION PRINTED ON THE CERTIFICATION PLATE AFFIXED TO THE APPLIANCE ALWAYS TAKES PRECEDENCE OVER INFORMATION CONTAINED IN ANY OTHER PUBLISHED MEDIA (MANUALS, CATALOGS, FLYERS, MAGAZINES OR WEB SITES).

9.1 GENERAL REQUIREMENTS

- **Make sure the chimney outlet and the pipes are clean and in good condition.**
- **Do not use chemical products or liquids to light the fire.**
- **Do not burn wood coated with paint, glue or chemical products.**
- **Do not burn waste, flammable liquids such as gasoline, naphtha, engine oil, or other inappropriate materials.**
- **Do not store wood in the vicinity of the furnace. Respect the required clearances between combustible materials and the heat source.**
- **Caution: the combustion air damper should never be altered for increased firing for any reason whatsoever.**

WARNING! THE ASH DRAWER AND EXCHANGERS ACCESS PANEL GET VERY HOT AND MUST NOT BE HANDLED WITH BARE HANDS.

WARNING: This product can expose you to chemicals, including carbon monoxide, which is known to the State of California to cause cancer, birth defects or other reproductive harm. For more information go to www.P65warnings.ca.gov/

9.2 ODOUR FROM THE PAINT

It is normal that smoke and odours emanate from the unit when you first light it. It is recommended to burn it at a high rate and ventilate the building until the odours disappear. The smoke is not toxic. **This should be done before the hot air ducts are connected to the furnace to prevent smoke dispersion in the home.**

9.3 ASH DISPOSAL

Ashes must be placed in a metal container with a tight-fitting lid. The container should be stored outdoors, well away from combustible materials. This container should not contain any other type of waste. If the ashes and embers are meant to be buried, wait until all embers and ashes have thoroughly cooled before burying.

9.4 CREOSOTE BUILD-UP AND REMOVAL

When wood is burned slowly, it produces tar and other organic vapours which, when combined with moisture, form creosote. Creosote vapours will condense in a relatively cool chimney flue. The result is a build-up of creosote residue accumulation on the inside walls of the furnace's flue pipes and heat exchangers.

To reduce the frequency of chimney cleaning, buy or cut your firewood at least one year in advance prior to using it. Store it in a dry and covered place in order to obtain a minimal moisture rate and to optimize the burn efficiency. Never store wood or combustible materials within installation distances or in the space required for loading wood or ash removal.

When ignited, creosote produces an extremely hot fire inside the chimney.

. During the first year of operation, check the chimney and flues regularly for dirt/creosote build-up. Once you've been able to assess the rate at which the system is clogging up, you'll be able to set up a regular cleaning schedule. Depending on the level of use and the type of wood used, a mid-season cleaning may be necessary. **Annual cleaning is mandatory. If creosote build-up occurs, immediate cleaning is required to eliminate the risk of fire.**

Remember that a small, intense fire is preferable to a large smoldering one, to prevent creosote build-up. It's essential to have an emergency plan in case of a chimney fire. What's more, **it is especially important to clean heat exchangers and flues thoroughly at the end of the season to prevent corrosion.**

9.5 SMOKE DETECTOR

We strongly recommend the use of a smoke/carbon dioxide (CO) detector in your home. It should be installed at a minimum distance of 15 feet (4.57 m) from the appliance to prevent smoke escaping during loading or ignition from triggering the detector unnecessarily.

DOOR GLASS

- To maintain a clean and safe installation, do not build your fire too close to the glass or allow logs to lean on the glass.
- Do not operate your furnace at too low a firing rate. Keep the air inlet opened long enough during the fire start-up to prevent the fire from smothering, otherwise you risk staining the glass unnecessarily.
- An intense fire will help keep your glass clean itself. However, if it is really too dirty, which should not normally happen, you will need to use a damp cloth or glass cleaner for wood burning appliances. Clean the glass **ONLY** when the appliance has cooled. Do not use an abrasive cleaner.

WARNING! DO NOT KNOCK OR SCRATCH THE GLASS AS IT COULD CRACK OR BREAK.

Glass specifications:

- Made of 5/32" (4 mm) thick ceramic glass.
- Do not operate your wood furnace with a broken glass, as this could seriously damage your furnace.
- You can purchase a replacement glass from your Caddy dealer or online at www.caddyfurnaces.com.

9.6 ASH DRAWER

Your furnace is equipped with an ash drawer to collect ashes produced by the combustion of wood. Under no circumstances should the ash drawer be left open during combustion, as this would cause over firing and create an uncontrollable fire, moreover the excess air could cause ash to disperse into the ventilation system.

The drawer must be cleaned regularly. Use an ash vacuum cleaner to remove any ashes from around the drawer. Failure to perform this important operation will cause ashes to disperse into the ventilation system.

It is important that the door, the heat exchanger door, and the ash drawer be kept closed while the appliance is in use. Maintain all gaskets in good condition; in case of deterioration, contact your local dealer for a genuine replacement gasket.

9.7 ASH GRATE

You must replace the ash grate if it is damaged. A replacement grate can be purchased from your local dealer or online at www.caddyfurnaces .com

9.8 ADDITIONAL FRESH AIR SUPPLY

When the furnace and the chimney are completely cold, it may be necessary to provide fresh air by opening a door or a window for a few minutes while lighting the fire. A tightly built or renovated home is prone to lacking the necessary air renewal for the proper operation of a wood-burning appliance.

In such a case, when starting up the fire, avoid operating appliances that evacuate air outside the home, such as:

- Range hood
- Bathroom fan
- Air exchanger
- Ventilated central vacuum system.
- Clothes dryer

Exhaust blowers located in a firewood storage room must be installed so as not to create negative pressure in the room where the furnace is located.

A fresh air supply may be necessary to prevent solid fuel units from smoke spill back into the home. The guidelines for determining whether a combustion air supply is required are not suitable for all situations. When in doubt, it is recommended to install a fresh air supply.

A fresh air supply may be needed if:

- Solid fuel units present anomalies, such as irregular draft, smoke spillage, bad combustion, and/or reversed draft (whether there is combustion or not).
- Existing solid fuel units such as stoves or fireplaces release odours, heat badly, cause smoke returns, or reversed draft (whether there is combustion or not).
- The opening of a window, even slightly, in calm weather (windless), each of the above problems.
- The home has an airtight vapour barrier and fitted windows, and/or is equipped with mechanical devices for evacuating indoor air (air exchangers).
- There is excessive condensation on the windows in winter.
- The home is equipped with a ventilation system.

If these or similar symptoms indicate insufficient air supply, fresh combustion air must be supplied. See section 11.8 INSTALLING A FRESH AIR INTAKE

10 FIREWOOD

What is good firewood?

Good firewood is that which has been cut to the correct length for the furnace, split to a range of sizes and stacked in the open until its moisture content is reduced to 15% to 20%.

Tree species

The tree species from which the firewood is produced is less important than its moisture content. The main difference between tree species is wood density. Hardwoods are denser than softwoods. People living in the coldest regions of North America usually only have spruce, birch, poplar, or other low-density species to burn and yet they can heat their homes successfully.

Homeowners who can obtain both hardwood and softwood sometimes use both types for different purposes. For example, soft woods are a good fuel for relatively mild spring and fall weather because it it ignites quickly and produces less heat Softwoods are not as dense as hardwoods, so for given volume softwood contains less energy than hardwood. Using softwoods avoids overheating the home, which can be a common problem with wood heating in mild weather. Harder woods are best for colder winter weather, when more heat and longer burn cycles are required.

Note that hardwoods like oak, maple, ash and beech take longer to grow and live longer than softwoods like poplar and birch. This makes hardwood species more valuable. The advice given that only hardwoods are good to burn is outdated. The old, leaky cast iron furnaces would not hold a fire overnight unless they were fed large pieces of hardwood. This is no longer the case. You can successfully heat your home by using the less desirable tree species and give the forest a break at the same time.

Log length.

Logs should be cut to be about 1" (25 mm) shorter than the combustion chamber so that they fit in easily. Pieces that are too long make loading the furnace very difficult. The most common length of firewood is 16" (406 mm).

Logs should be of equal length, varying by no more than 1" (25 mm) from one to the next.

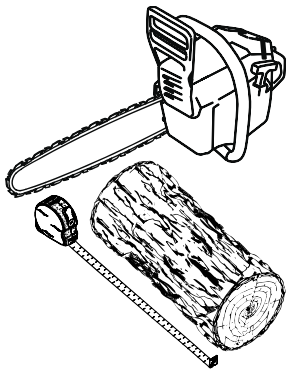

Log size.

Firewood dries more quickly when split. Large logs that are not split can take years to dry sufficiently for burning. Even when dried, unsplit logs are difficult to light because they don't have the sharp edges where the flames first catch. Logs 3" (76 mm) and larger should be split to facilitate drying.

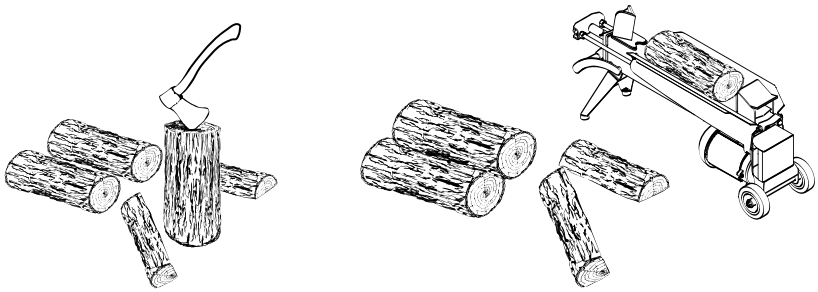

Wood should be split different sizes, from 3" to 6" (76 mm to 152 mm) thick. Having a range of sizes makes starting and rekindling fires much easier. Often, firewood purchased from commercial suppliers is not split small enough to feed a fire. It is sometimes best to re-split the wood before stacking it to dry.

How to dry firewood

Firewood that is not dry enough to burn is the cause of most complaints about wood burning appliances. Constant burning of green or unseasoned wood produces more creosote and involves lack of heat and dirty glass door. See section ***16 FURNACE MAINTENANCE*** for concerns about creosote.

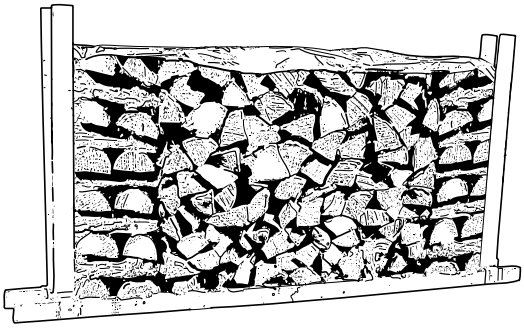

Things to consider in estimating drying time:

- Firewood takes a long time to dry.
- Firewood dries mainly at the exposed ends. Long pieces of wood should be cut to “firewood” length if expected to dry faster.
- Firewood bought from a vendor is rarely dry enough to burn, so it is advisable to buy the wood in spring and dry it yourself.
- Drying is faster in dry climates than in damp, maritime climates.
- Drying is faster in warm summer weather than in winter weather.
- Small logs dry faster than large ones.
- Split logs dry faster than round wood.
- Softwoods take less time to dry than hardwoods.
- Softwoods such as pine, spruce and poplar/aspen can be dry enough to burn after being stacked in the open for only the summer months.
- Hardwoods such as oak, maple and ash can take one, or even two years to dry fully, especially if the pieces are large.
- Firewood dries faster when stacked in the open where it is exposed to sun and wind; it takes much longer to dry when stacked in a woodshed or mound.
- Ready-to-burn firewood has a moisture content of 15 to 20% and will allow your furnace to reach its highest efficiency.

How to assess the moisture content of firewood You can tell whether firewood is dry enough to burn by using the following guidelines:

- Use the firewood moisture meter provided with your furnace to confirm that the moisture content is between 15-20%. For a more accurate value, test the middle of a freshly split piece of firewood.
- Cracks appear at the ends of logs as they dry.
- As wood dries in the sun, it changes color from white or creamy to gray or yellow.
- Knock two pieces of wood together, dry wood sounds hollow and damp wood sounds muffled. Dry wood is much lighter in weight than wet wood.

Split a piece of wood and if the exposed face feels warm and dry to the touch, it's dry enough to burn; if it's damp to the touch, it's not ready. Burn a piece of wood; wet wood will whisper, ooze and sizzle in the fire, dry wood will not.

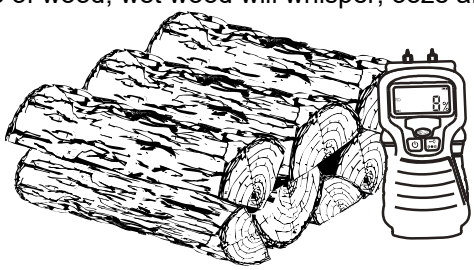

INSTALLATION AND OPERATION INSTRUCTIONS

CADDY ADVANCED CR WOOD FURNACE OR PARALLEL ADD-ON PF01021

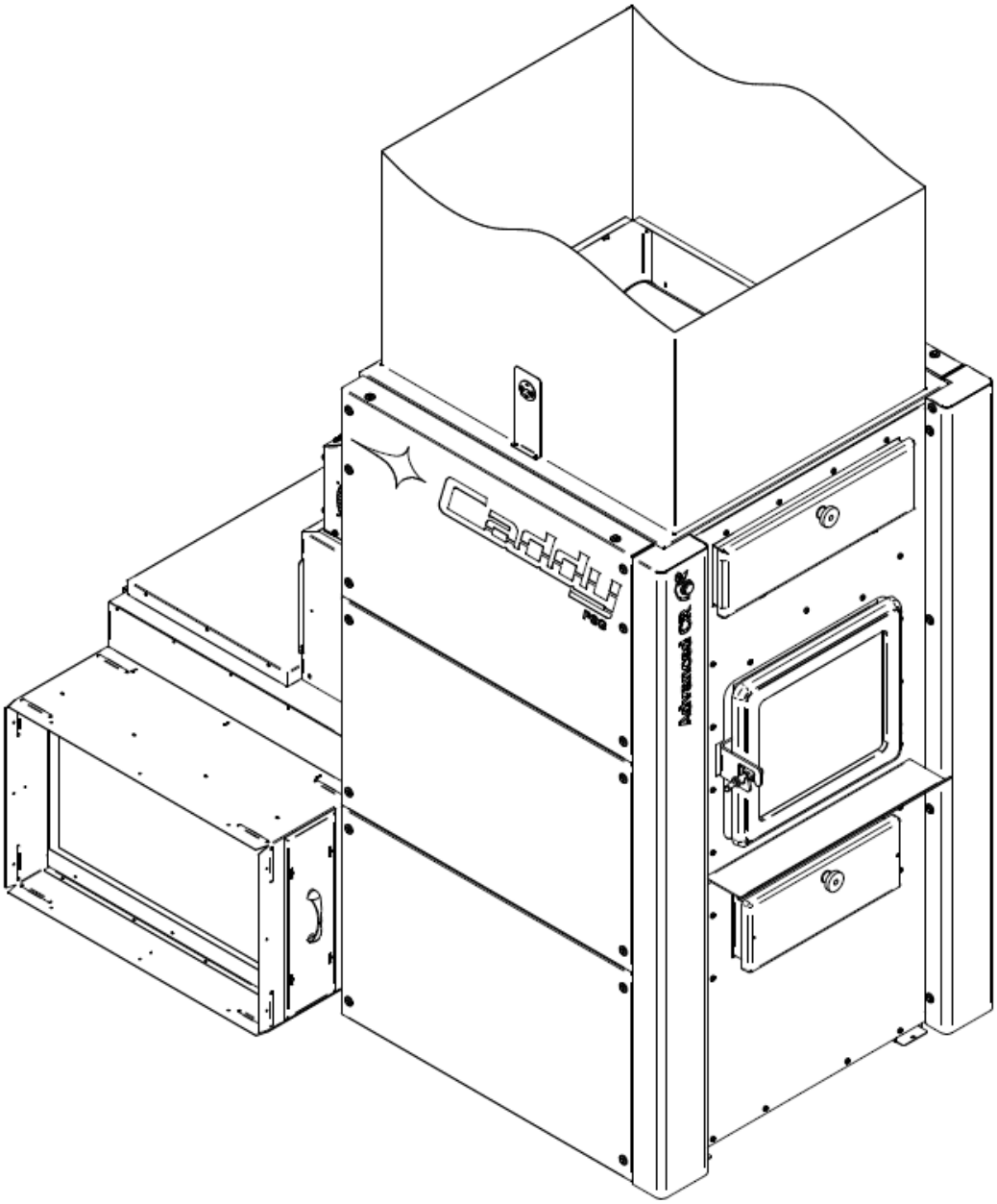

11 INSTALLATION INSTRUCTIONS

Installation must comply with applicable installation codes CSA B.365 “Installation Code for Solid-Fuel-Fired Appliances and Equipment” in Canada and NFPA 90B « Standard for the Installation of Warm Air Heating and Air-Conditioning Systems» in the United States. Moreover, all electrical connections, must comply with Canadian standard CSA C22.1 « Canadian Electrical Code » and NFPA 70 Standard « National Electrical Code » in the United States.

All controls must be adjusted by a qualified technician. Adjustment of controls and blower speed must comply to CMMTQ recommendations and the Warm Air Heating and Air Conditioning National Association and should respect the static pressure ranges in the warm air plenum of the furnace.

We recommend that our woodburning appliances be installed and serviced by professionals who are certified in the United States by NFI (National Fireplace Institute®) or in Canada by WETT (Wood Energy Technology Transfer) or in Quebec by APC (Association des Professionnels du Chauffage).

Inspect the furnace to ensure that it has not been damaged in transit. combustion chamber Remove the components and instruction manual from the combustion chamber and the tools from the furnace exhaust pipes.

The installation instructions in this section apply to the Caddy Advanced CR wood-only and Caddy Advanced CR parallel installation.

WARNING! ONLY USE WIRES SUITABLE FOR 167 °F (75 °C) OR MORE.

11.1 BLOWER INSTALLATION

To use the wood only or parallel add on configuration, blower assembly (PA08581 or PA08582 – sold separately) is required. The installation instructions are provided with the blower.

11.2 HOT AIR PLENUM TEMPERATURE PROBE INSTALLATION AND CONNECTION (RTD)

On the Caddy Advanced CR, a temperature probe (RTD) must be installed on the left-hand side of the furnace using the bracket provided with the unit. The RTD is a probe that reads the temperature within the hot air plenum and is essential to the proper operation of the unit. It is important that the RTD and the RTD support be properly secured to the hot air plenum and furnace.

STEP 1: Secure the RTD bracket **(A)** with two screws **(B)** found in the owner’s manual kit.

STEP 2: Using a drill and a 9/32" bit, drill a hole in the hot air plenum so that the RTD probe can fit into the hole.

STEP 3 & 4: Secure the RTD in place on the hot air plenum using the two self-drilling screws provided with the owner’s manual.

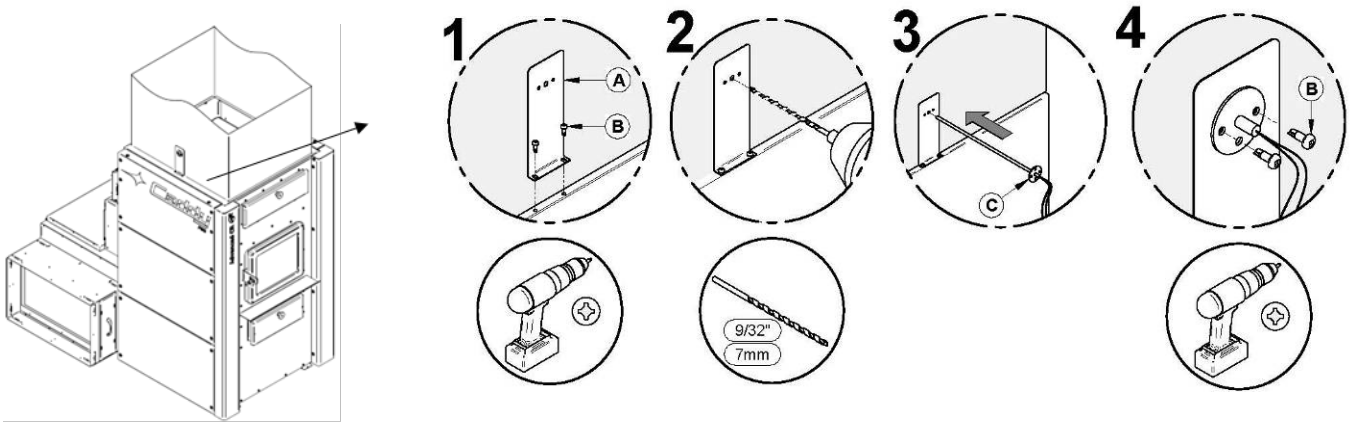

STEP 5: Connect the RTD probe **(B)** to the furnace terminal block marked **"R"**.

STEP 6: Use the grommets **(C)** supplied with the manual to attach the wires from the RTD to the furnace.

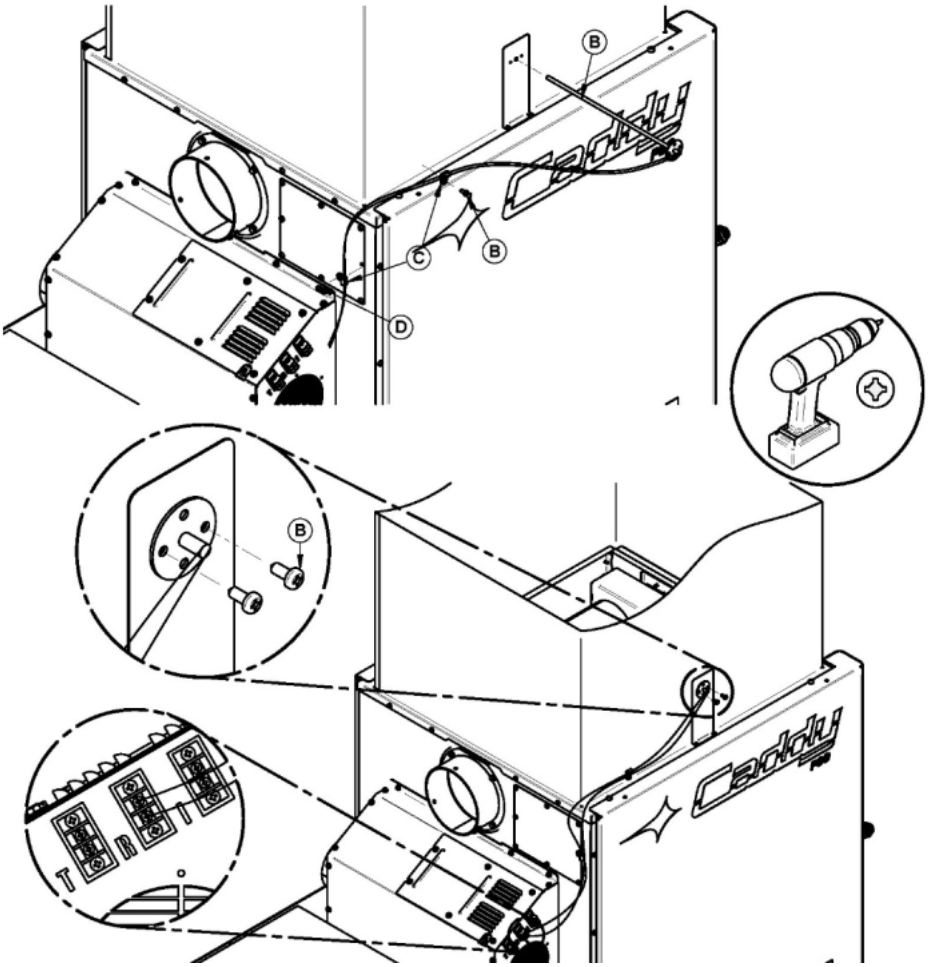

11.3 UNIT LOCATION

- ✓ For a safe, quiet, and efficient operation, the furnace must be leveled in both directions and evenly supported to ensure stability.
- ✓ The furnace must be installed in a location where there is an adequate supply of secondary air to support combustion. In airtight homes, it may be necessary to install an outside air intake. **See section *11.8 FRESH AIR SUPPLY INSTALLATION***

The furnace should be positioned so that the connecting pipe is as short as possible, to eliminate the need for 90-degree elbows. **It is the owner's responsibility to ensure that the unit is properly installed to allow for safe operation.**

11.4 MINIMUM CLEARANCES TO COMBUSTIBLE MATERIALS AND FLOOR PROTECTION

This appliance must be installed in accordance with the instructions on the certification plate affixed to the unit.

11.4.1 MINIMUM CLEARANCES TO COMBUSTIBLE MATERIALS

The clearances shown in this section have been established on the basis of safety tests under normal and abnormal operating conditions in accordance with the procedures set out in standards CSA B366.1 (Canada) and UL 391 (U.S.A.). Compliance with these clearances is essential to prevent the risk of fire.

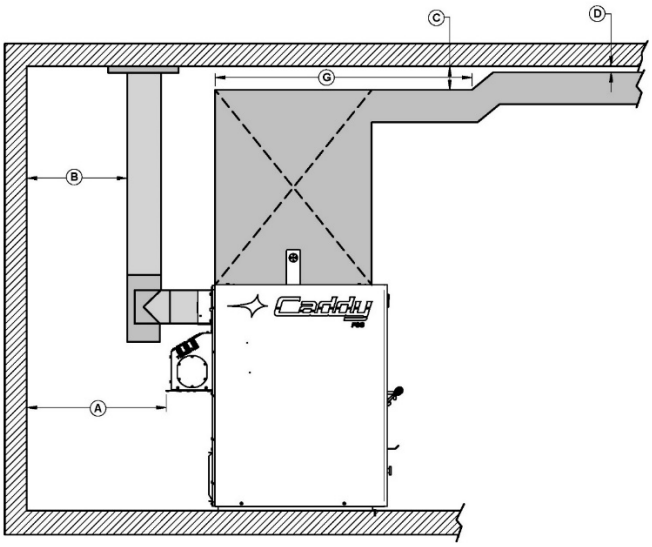

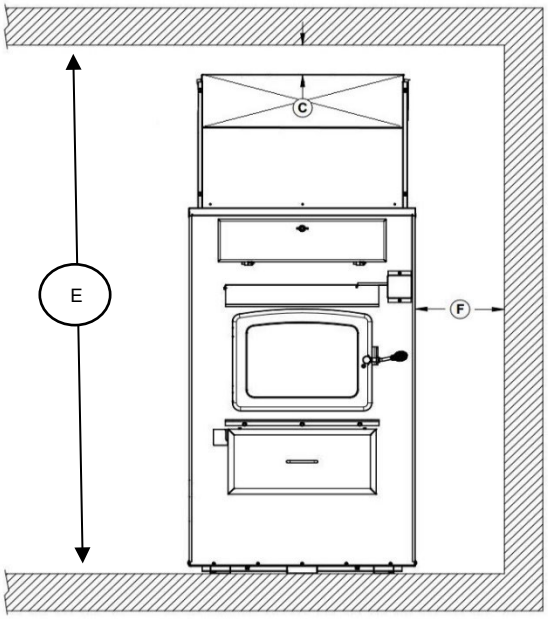

SINGLE WALL PIPE	
MINIMUM CLEARANCES	
A	24" (610 mm)
B	18" (457 mm)
C	6" (152 mm) for the first 6' (G)
D	1" (25 mm)
E	80" (203 cm)
F	6" (152 mm)
G	72" (183 cm)

DOUBLE WALL PIPE	
MINIMUM CLEARANCES	
A	24" (610 mm)
B	18" (457 mm)
C	6" (152 mm) for the first 6' (G)
D	1" (25 mm)
E	80" (203 cm)
F	6" (152 mm)
G	72" (183 cm)

11.4.2 MINIMUM CLEARANCES TO COMBUSTIBLES MATERIALS FOR AIR RETURN DUCT

The return air duct should be at least equal in size to the return air plenum. The air return duct can be installed at zero clearance to combustibles.

11.4.3 MINIMUM CLEARANCES TO COMBUSTIBLES MATERIALS FOR HOT AIR PLENUM

The plenum installed on the furnace must be made of metal in accordance with NFPA 90B, 2-1.3. When a side wall is located within less than 6 feet from the furnace, the hot air duct can pass through it with a clearance of six (6) inches around it. For a wall located more than 6 feet away, the clearances can then be reduced to 1 inch.

11.4.4 FLOOR PROTECTION

- If the floor is made of non-combustible materials (like concrete), no floor protection is required.
- If the floor is made of combustible materials, non-combustible floor protection is required (see table below).

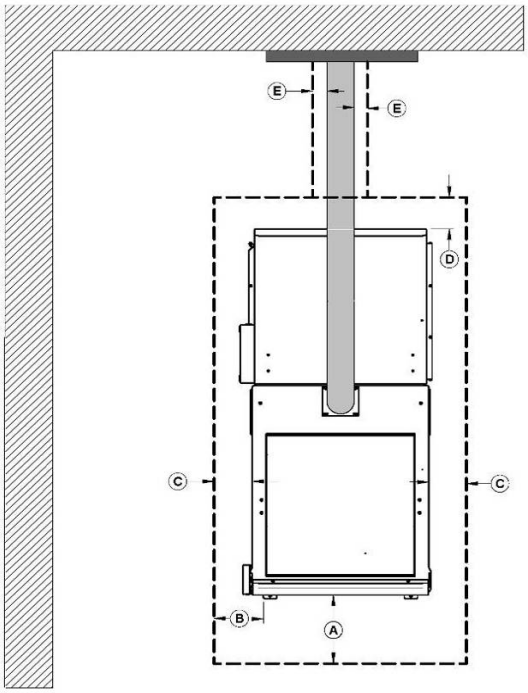

Top view

	FLOOR PROTECTION*	
	CANADA	**USA**
A	18" (457 mm) From door opening	16" (406 mm) From door opening
B	N/A (USA only)	8" (203 mm) From door opening
C	8" (203 mm)	N/A (Canada only)
D	8" (203 mm) – Note 1	N/A (Canada only)
E	N/A (USA only)	Note 2

**Steel with a minimum thickness of 0.015" (0.38 mm) or ceramic tiles sealed together with grout. No protection is required if the unit is installed on a non-combustible floor (ex: concrete).*

***Note 1**: The floor protection at the back of the furnace is limited to the furnace's required clearance (A) if such clearance is smaller than 8 inches (203 mm).*

***Note 2**: Only required under the horizontal section of the connector. Must exceed each side of the connector pipe by at least 2 inches (51 mm).*

11.5 STOVE PIPE CONNECTION

Before connecting the stove pipe, make sure to remove accessories such as the scraper, shovel and poker from the furnace exhaust pipe and/or heat exchangers.

The Caddy Advanced CR furnace is equipped with a 6" diameter flue that can be installed to a 6" chimney approved for solid fuel appliances (2100°F). If the draft exceeds 0.06 IN. W.C., a barometric damper must be installed **(See Draft Damper). Never install a manual chimney damper.**

Best practices and installation code requirements:

- Recommended inner diameter: 6" (152 mm).
- If an increaser is to be used (max 6" (152 mm) to 7" (178 mm)), it must be installed as close as possible to the chimney.
- All stove pipe joints must be secured with three screws. Failure to secure them to each other may allow for separation, leaks, and possible fire.
- A minimum upward slope of 1/4" per foot (20 mm/m) must be maintained on the horizontal portion of the stove pipe. Make sure that each screw penetrates the inner wall of both connectors (male and female). See pictures below showing a male/female coupling.

PROPER INSTALLATION

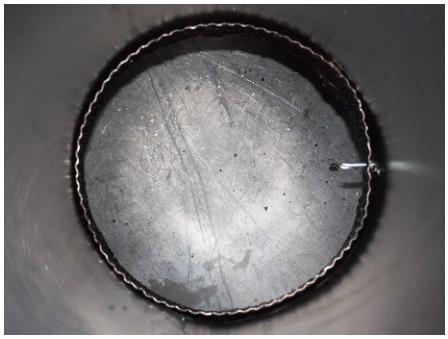

IMPROPER INSTALLATION

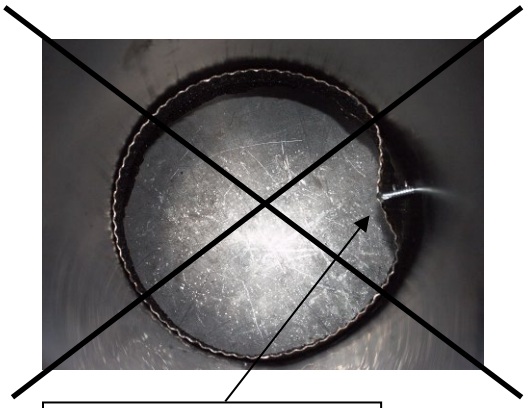

CAUSES RESTRICTION

- A straight flue installation offers the least restriction to smoke evacuation and results in stronger draft. Straight installations also require less maintenance as there are no corners where creosote can settle.
- The use of 45° elbows is strongly recommended.

  The use of more than two 90° elbows is prohibited.

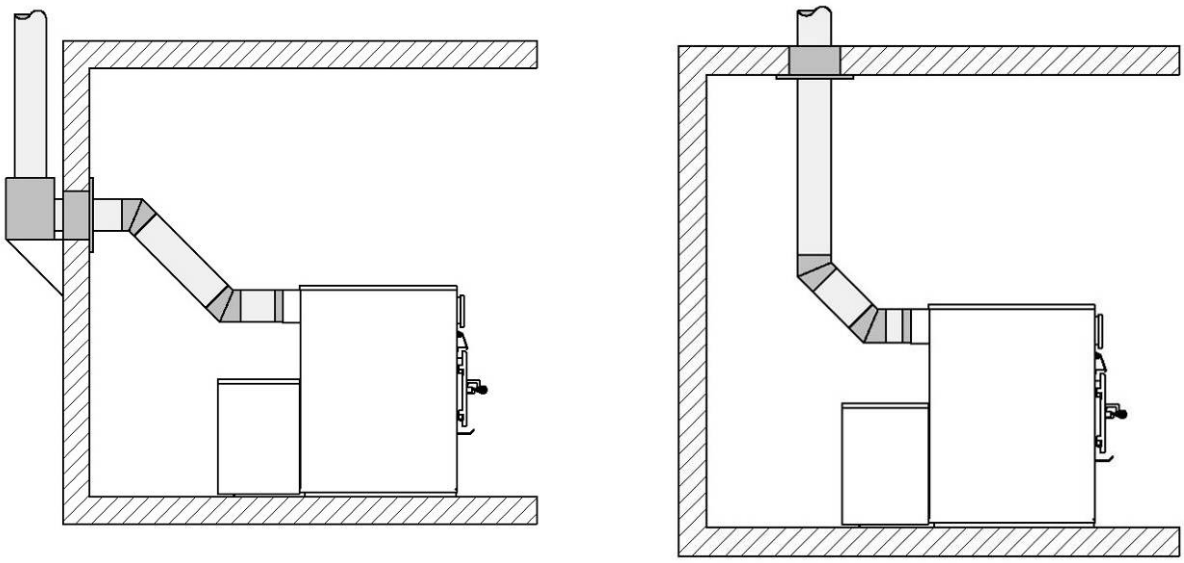

Use 45° elbows where possible, rather than 90° elbows.

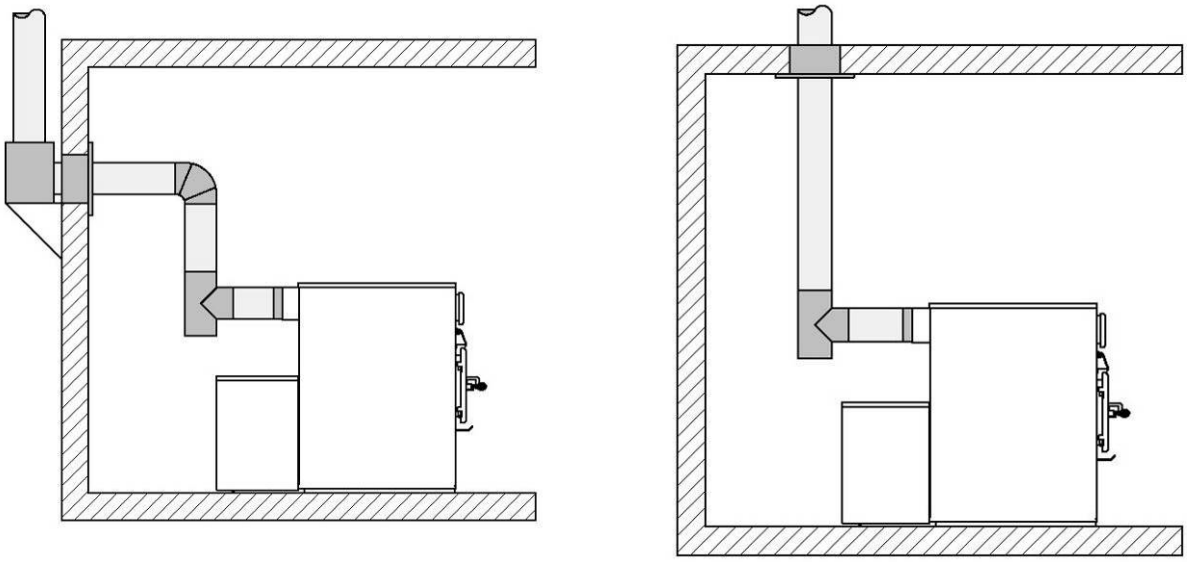

Alternative installations with 90° elbow or tee.

11.6 ELECTRICAL CONNECTIONS

- ✓ **The following instructions do not replace those of your local code.**
- ✓ **Installation and verification of this appliance must be done by a qualified service man.**
- ✓ **The furnace is fully assembled at the factory and no electrical connections are required other than plugging the power cord into an electrical outlet, connecting the RTD probe and thermostat.**

All wiring from the service panel to the heating unit must comply with the current electrical code and all local regulations. It is recommended to supply power to the furnace with its own dedicated 15 amp 120 volt circuit breaker (see wiring diagram). DRAFT REQUIREMENTS

If the draft exceeds 0.06 IN. W.C., a barometric damper must be installed. The barometric damper must be adjusted so that the **maximum draft** measured at the furnace outlet is limited to **0.06 IN. W.C**. On the other hand**, the minimum** draft to be respected is **0.04 IN.W.C**

DRAFT: The draft measurement is taken in the exhaust pipe 18" (457 mm) above the furnace's flue collar using a tube and a pressure gauge (manometer).

- **Poor draft**: **-0.03" W.C. (7.5 Pa) and under**:
  - ✓ Ignition problems, risk of smoke spillage, poor heat exchanger performance.
- **Ideal draft**: **from -0.04" to -0.06" W.C. (10 to 15 Pa)**:
  - ✓ For optimum furnace performance.
  - ✓ A barometric draft control is not required.
- **Excessive draft**: **-0.08" W.C. (20 Pa)**: **WARNING!**
  - ✓ This leads to premature wear of the furnace, a situation which is not covered by warranty.

A draft greater than -0.08 IN. W.C. (20 Pa) leads to combustion runaway (uncontrollable fire) even with the air control in the closed position. The furnace's self-regulating control system reduces the risk of excessive draft. If necessary, a barometric control damper should be installed to control excessive draft. It should be adjusted to limit the maximum draft to -0.06 IN. W.C. (15 Pa).

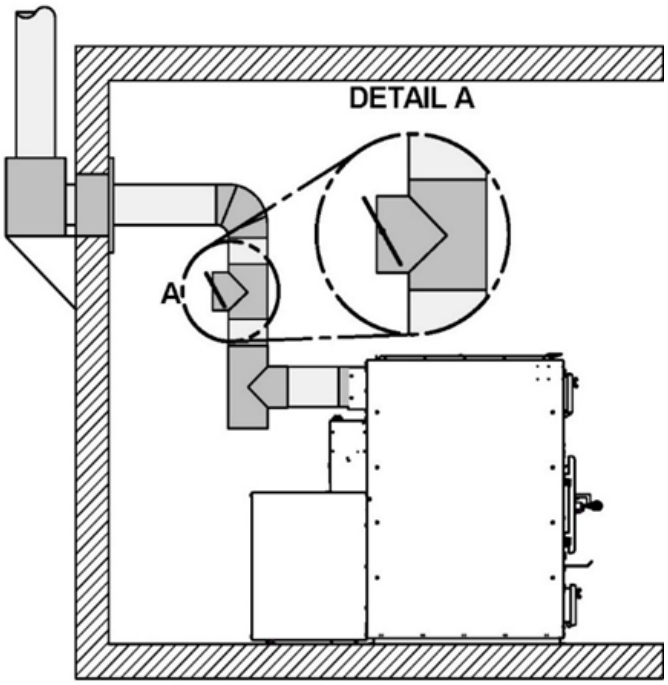

11.7 FRESH AIR SUPPLY INSTALLATION

Fresh combustion air may be supplied in the following ways, provided they comply CSA B365, chapter 5 and NFPA 211:

Direct fresh air supply:

- Appliances may only be connected directly to a fresh combustion air source if they are certified for this type of installation, which must comply with the manufacturer's instructions.
- The Caddy Advanced CR features a fresh-air intake system that has been tested and certified.
- The fresh air supply adapter can be installed on either the left or right side of the furnace, depending on the installation which meets requirements best.

Components provided with the furnace for the installation of a fresh air supply.

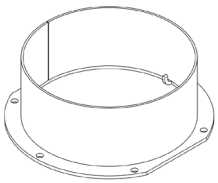

1x fresh air supply adapter 5" (13 mm) **(A)**

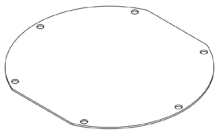

1x fresh air cover **(B)**

12x type A #10 black screws **(C)**

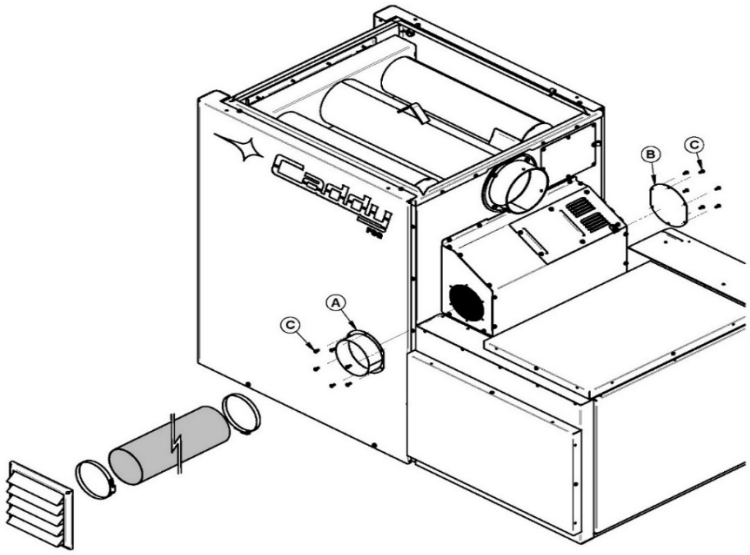

Indirect fresh air supply:

- New combustion air can be supplied using an insulated pipe located no more than 12" (305 mm) from the unit so as not to interfere with its operation.
- The recommended diameter for the fresh air intake pipe is 5" (127 mm).
- Mechanical ventilation system: if the home is equipped with a ventilation system (air exchanger or heat recovery), the ventilation system may be ably to supply sufficient fresh air to the furnace. Otherwise, the homeowners should be aware that the ventilation system may need to be rebalanced by a ventilation technician after the furnace has been installed.

Do not use a barometric draft control damper when a fresh air intake system is installed.

11.8 TOOL HOLDER INSTALLATION

The furnace comes with a tool holder which can be installed on a wall or beam close to the furnace. The components supplied with the furnace are as follows:

1x tool holder **(A)**
PL66268

1x shovel **(B)**
PL48171

1x poker **(C)**
PL48173

1x scraper **(D)**
PL48170

1. Securely fasten the tool holder with the help of two screws.

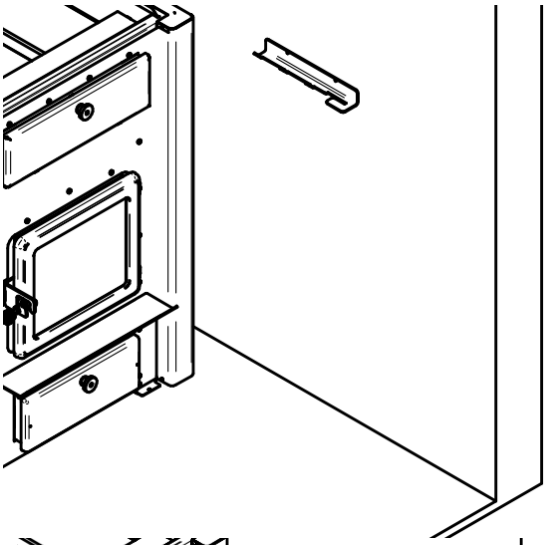

2. Install tools on holder.

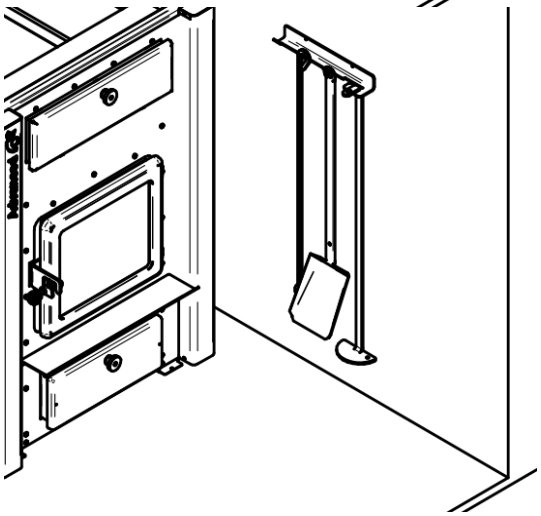

11.9 HOT AIR PLENUM

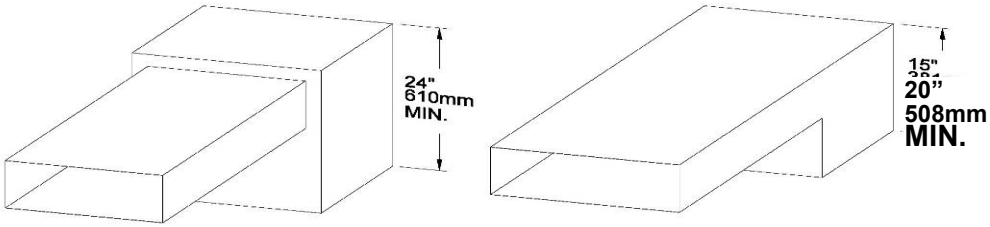

The hot air plenum exiting the furnace must have a minimum height of 24" (610 mm) if the top of the first vertical section is not flush with the first horizontal section. Otherwise, the minimum height of the vertical section must be 20" (508mm). These dimensions, for all hot air furnaces, meet the requirements of CSA B140.4 and UL 391.

To ensure adequate static pressure, the system should be designed so that **the cold air return volume is at least equal or slightly greater than the volume of warm air distributed**.

The warm-air supply-duct system must be constructed of materials with a minimum temperature rating of 250°F.

12 PARALLEL INSTALLATION

- ✓ The installation of the Caddy Advanced CR with another furnace using the same hot air ductwork **is not permitted in Canada**.
- ✓ **This type of installation is only allowed in the United States**.
- ✓ The maximum input BTU of the existing oil, gas, or electric furnace must be equal to or less than the 120 000 maximum input BTU of the wood furnace.
- ✓ It is mandatory to respect minimum clearances between the ductwork and combustible material as if the wood furnace was installed as a stand-alone unit.
- ✓ **The hot air ductwork and furnace must be adjusted so that the static pressure is at least 0.20 IN. WC, but not more than 0.50 IN.WC**.
- ✓ A backflow damper must be installed in the hot air plenum. The back-flow damper prevents that when either unit is being operated by itself, that hot air will flow into the home and not back through the other furnace.
- ✓ Depending on your installation (see examples below), a back-flow damper may be required in each warm air plenum.
- ✓ The warm-air supply outlet of the additional furnace must not be connected to the cold-air return inlet of the existing furnace as a possibility exists of components of the existing furnace overheating and causing it to operate improperly.

Conditional to:

- The clearances required for wood furnace must be respected.
- The clearances between the hot air ducts and combustible materials must meet the highest values between the two furnaces.
- The necessary adjustments are made to the furnace or hot air ducts to maintain a static pressure of between 0.20 and 0.50 IN.W.C.
- A backflow damper must be installed to prevent backflow into either of the two furnaces, and to ensure that hot air circulates through the home and does not return through the plenum of the other furnace. Depending on your configuration, it is possible that more than one damper maybe required to prevent backdrafts in the different hot air ducts (see examples below).

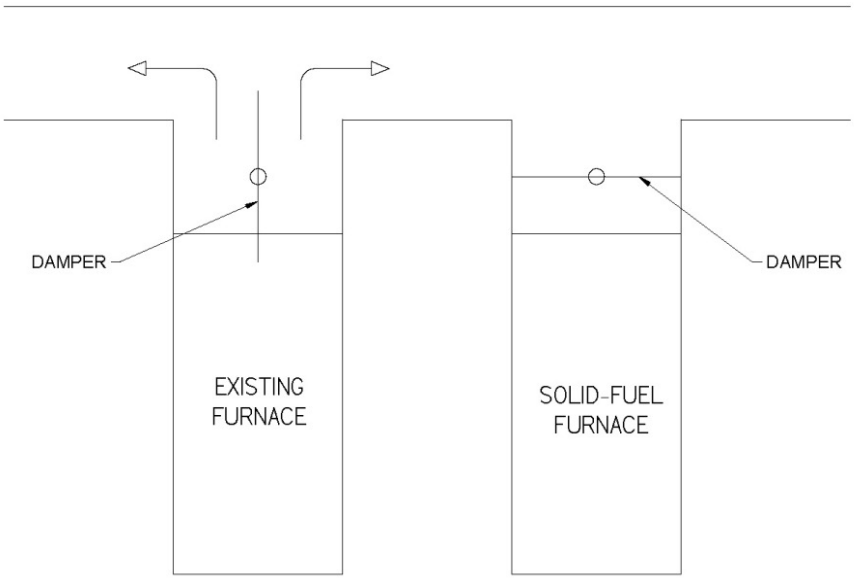

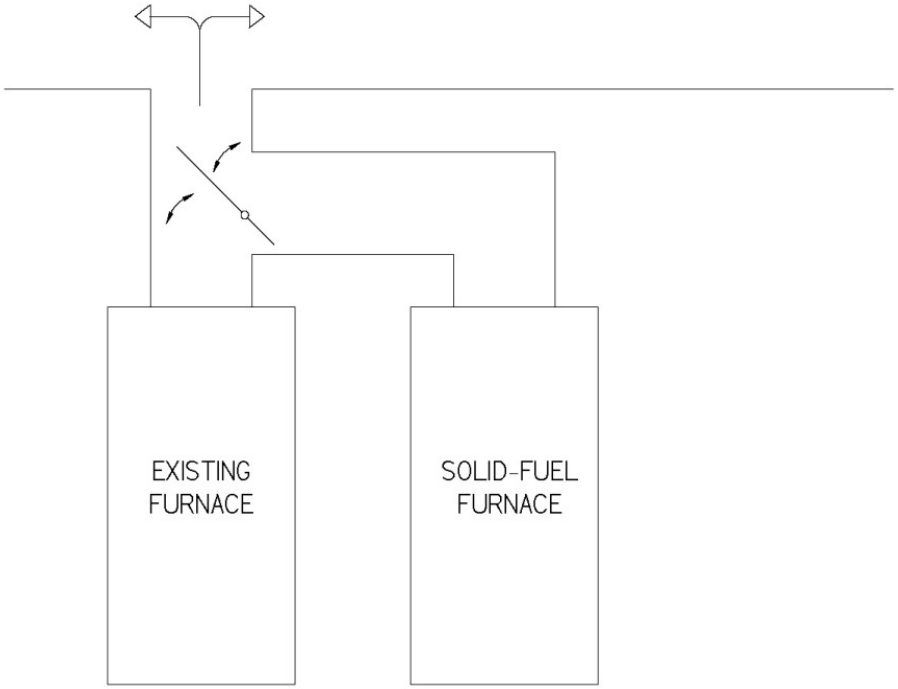

- ✓ To ensure safe installation, both furnaces must never, be operated simultaneously.
- ✓ To do so, the thermostat controlling the existing furnace must be connected to your Caddy Advanced CR interlock terminal. This way, when a heating signal is sent to the existing furnace, the Caddy Advanced CR will receive the same signal, telling it not to turn on, or to go into a shutdown cycle if it is running at the same time of the heating demand from the existing furnace's thermostat

13 HEATPUMP / AIR CLIMATIZATION INSTALLATION

WARNING: In a heat pump system, it is mandatory to add an auxiliary heating (electric or gas). If this instruction was not followed, PSG will not cover any damage under warranty.
WARNING: It is important to install a drain in the ducting where the cooling coil is to evacuate correctly water from condensation.

It is allowed to install a heat pump or air conditioning system with the CADDY ADVANCED CR. The maximum cooling capacity is of **2.5 tons**. The accessories PA03060: CONTROL UNIT AND OPTIONAL ADD-ON MODULES and PA08591: THE HEATPUMP HARNESS must be installed with the furnace and heat pump or AC coil to work properly. The preferred setup is to install the cooling coil in a bypass ducting with dampers. See following image:

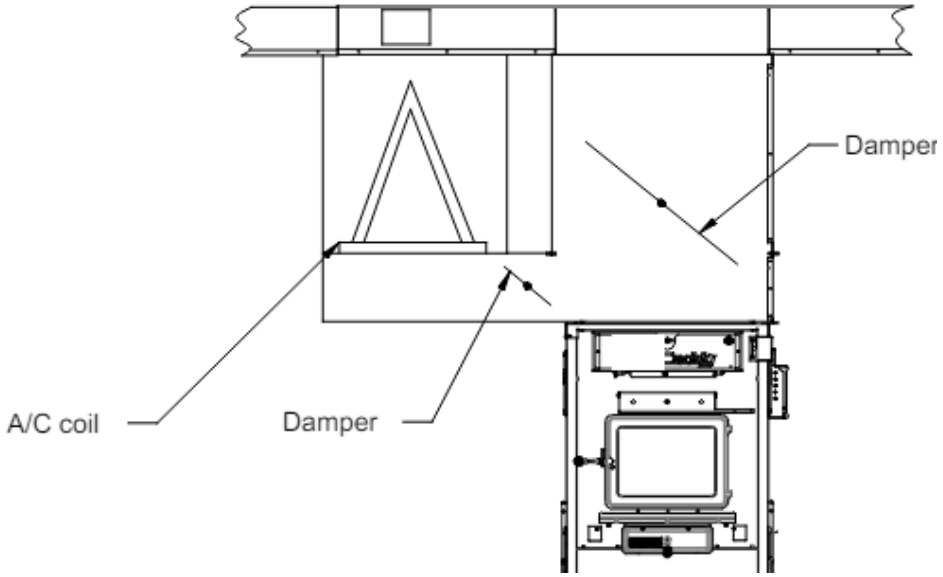

An installation of the heat pump coil in the cold air return is allowed, see following image. However, this configuration could lead to the appearance of rust due to condensation forming in the furnace. This rust is not covered by the warranty. Refer to the warranty statement at the end of the manual for more information. The coil must be part of a furnace or air handler. It is forbidden to install a heat pump in the air return with an electrical element PA01106.

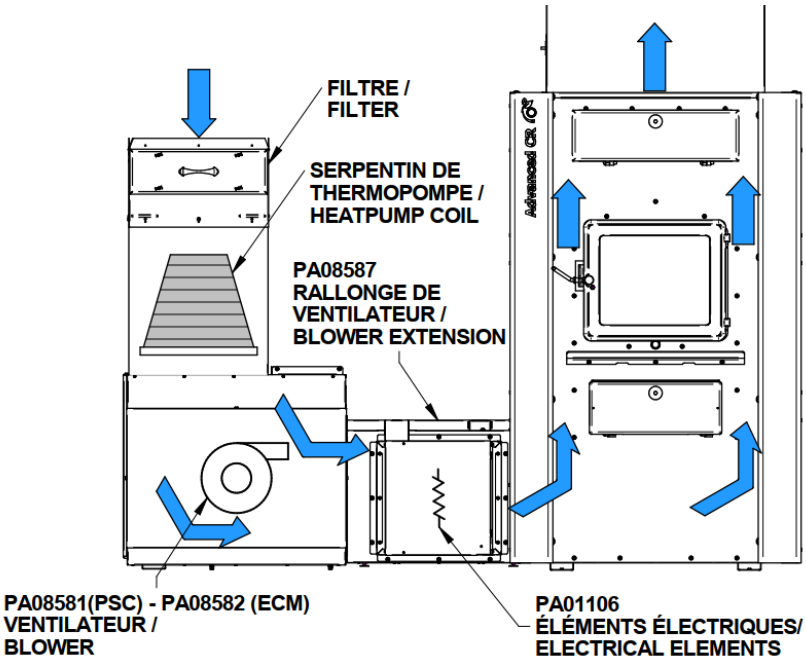

To install a heat pump coil in with an electrical element PA01106, a derivation plenum must be installed just like the next picture.

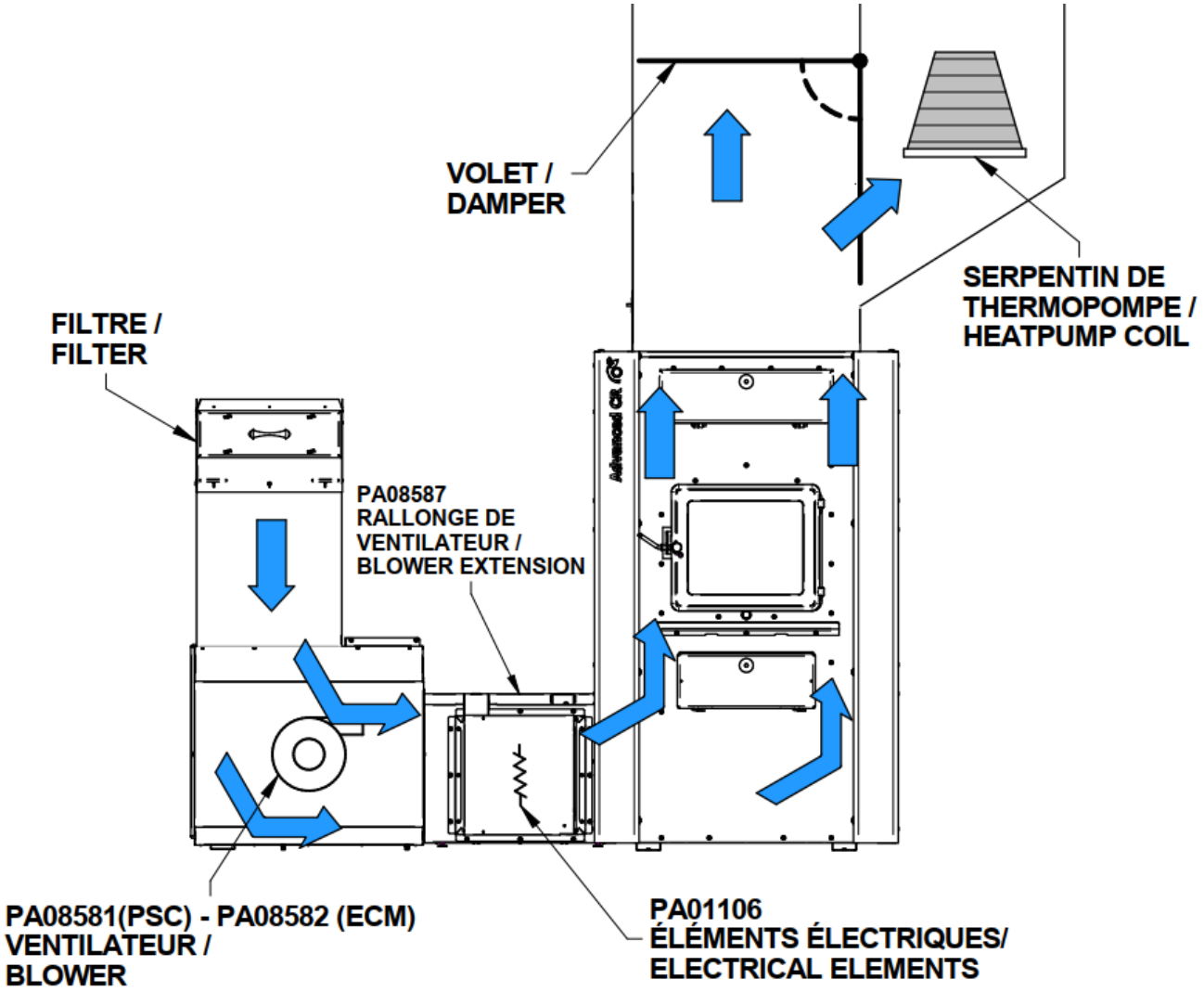

For additional information about the installation of the heat pump with the furnace, refer to the manual of the PA03060 (46370) and PA08591 (46367).

14 ELECTRICAL ELEMENT PA01106 INSTALLATION

The CADDY ADVANCED CR furnace can be paired with a 20 KW auxiliary electric element, PA01106. For more information regarding its installation, refer to the PA01106 instruction manual (46367).

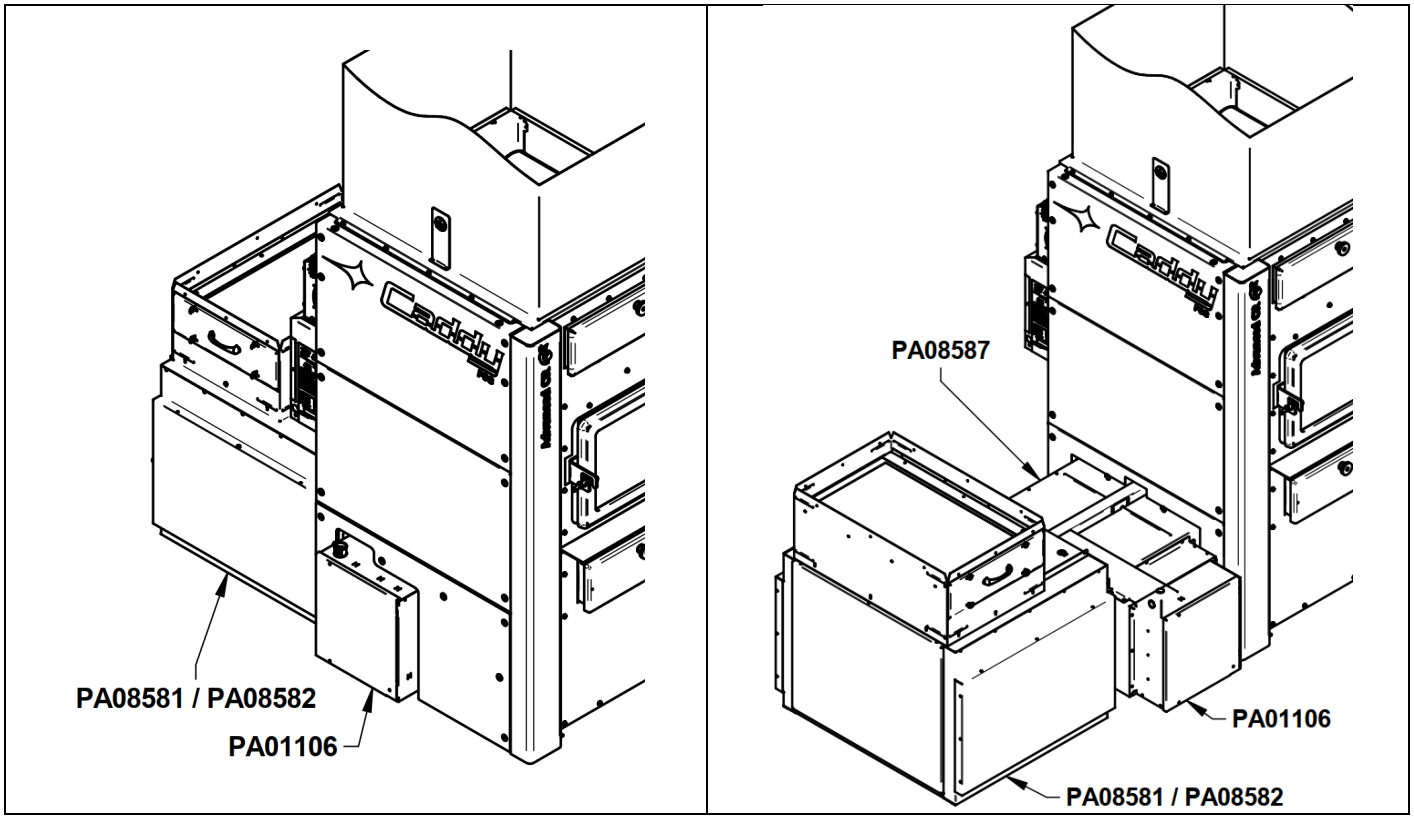

******Note that the fan can also be installed on the right side of the furnace."***

These options that can be combined to create an auxiliary electric heating system with the furnace:

Option	Description
PA01106	20 kW Electric Element
PA08581	PSC Blower
PA08582	ECM Blower
PA08587	Side Extension for blower fan

15 GAS FURNACE INSTALLATION

The CADDY ADVANCED CR furnace can be connected in series with a high-efficiency gas furnace. The recommended brands and models of gas furnaces to pair with the CADDY ADVANCED CR furnace can be found in the PA03060 instruction manual (46370), which includes the control module and optional complementary units. Installation instructions with a gas furnace are also included.

Several options can be paired with the gas furnace to facilitate its installation:

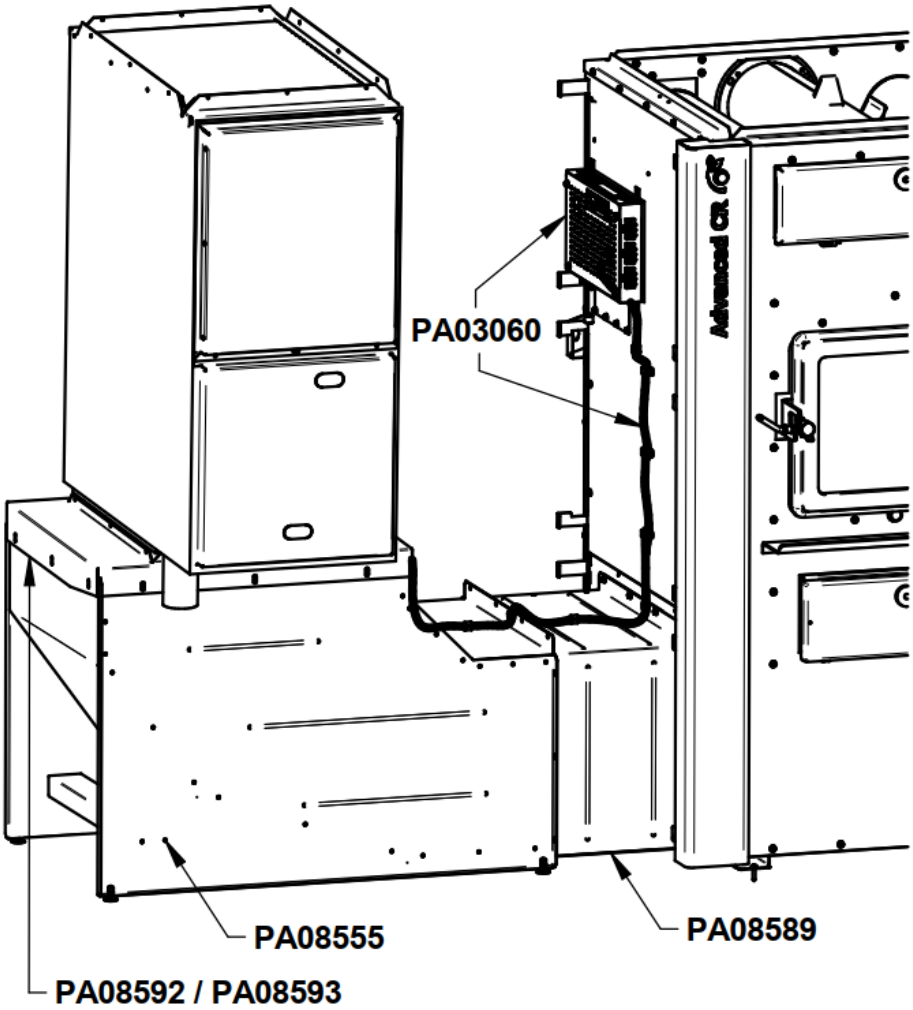

**** Note that the gas furnace can also be installed on the right side of the furnace."*

Option	Description
PA03060	Control unit and optional add-on modules
PA08555	Elbow support
PA08589	Elbow support extension
PA08592	Connexion plate for Dettson gas furnace
PA08593	Connexion plate for Napoleon and Continental furnace

16 THERMOSTAT INSTALLATION

In the case of an installation with a PA01106 electric heating unit, PA03060 serial add-on connection or the installation of a heat pump/air conditioner, refer to their respective leaflets to see the different scenarios for thermostat connection.

16.1 WOOD FURNACE ONLY

The furnace must be connected to a thermostat. You can use the one provided with the unit or one already installed in your home. The thermostat must be installed on an inside wall of the home and located where it will be less affected by drafts coming from an air outlet. It must be installed at a minimum of 55 inches (140 cm) above the floor.
Thermostat use helps maintain a constant temperature throughout the home. A fixed wall mounted 24v thermostat is required.
Thermostat manufacturer's instructions always take precedence over the information published in the following section.

Thermostat location

- Must be installed on an inside wall of the home.
- In a place where it will be least affected by air currents from a hot air outlet or cold outside walls.
- Must be installed at a minimum of 55" (140 cm) above the floor.
- Must be installed at a minimum of 15' (4.57 m) from the furnace and must not receive radiating heat from the glass door.

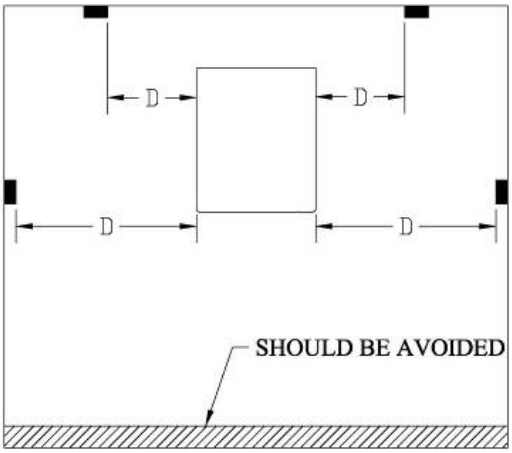

D = MINIMUM DISTANCE 15 FEET

13.1.1 24V THERMOSTAT WIRING

- Before installing the thermostat, disconnect the furnace from the power supply.
- **Use a minimum of 4-strand 18 AWG thermostat wire.**
- Strip and crimp 2 of the wires with 1/4" female insulated connectors **(typically R and C wires)**.

- Remove the right-hand side (when facing) from the air inlet box

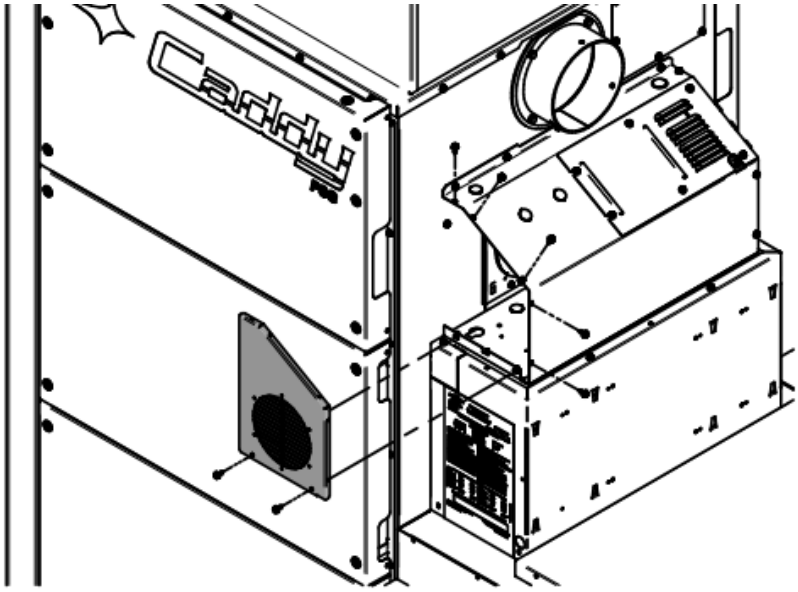

- Remove the knockout from the air intake cover and fit a grommet (found in the furnace manual kit) **See DETAIL**

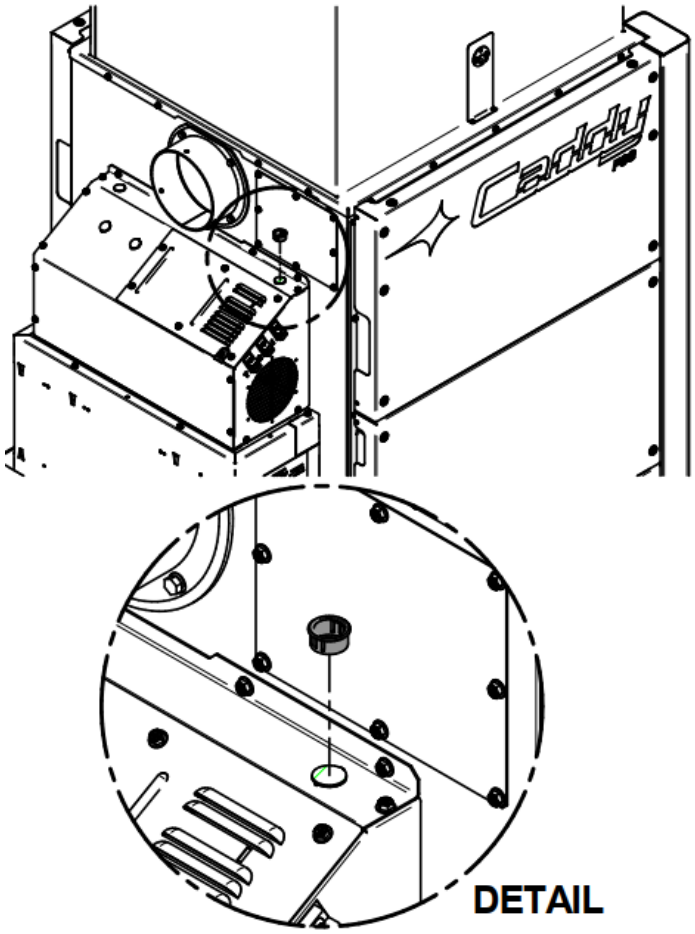

- Pass the 2 crimped wires through the grommet and connect them to the transformer. Strip the other end of the 2 wires and connect them to the thermostat's **"C"** and **"R"** terminals.

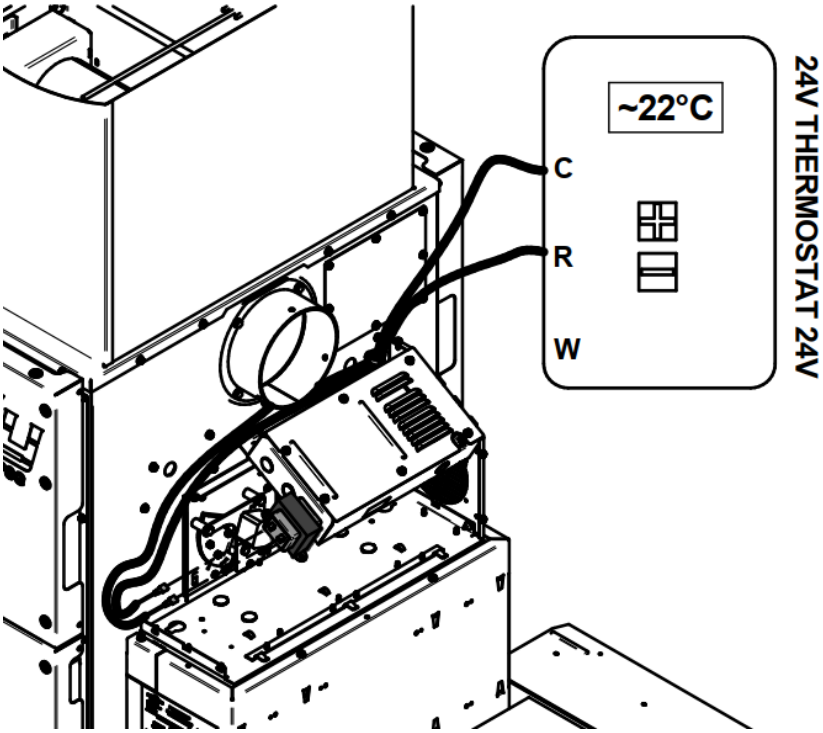

- The terminal block is located at the rear of the furnace on the left-hand side as you face it and is marked with the **letter T.**
- Loosen the two screws in the middle of the terminal block and insert the remaining 2 wires **(typically R and W)** under each screw. Now tighten both screws.
- Open the thermostat housing and connect the wires according to the manufacturer's instructions.
- Put back the right-hand side (when facing) of the air inlet box

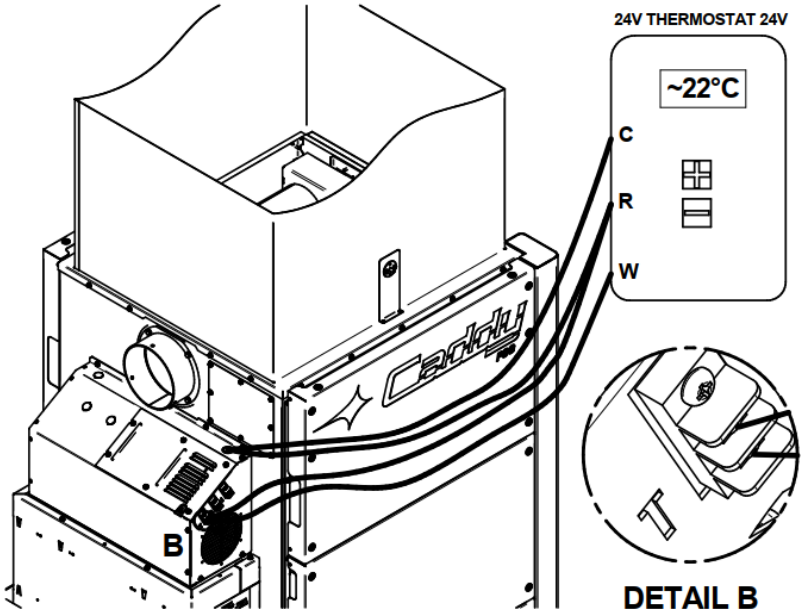

Battery-operated thermostat wiring

- Before installing the thermostat, disconnect the furnace from the power supply.
- Use 2-strand 18 AWG thermostat wire.
- The terminal block is located at the rear of the furnace on the left-hand side as you face it and is marked with the **letter T.**
- Loosen the two screws in the middle of the terminal block and insert the remaining 2 wires **(typically R and W)** under each screw. Now tighten both screws.
- Open the thermostat housing and connect the wires according to the manufacturer's instructions.

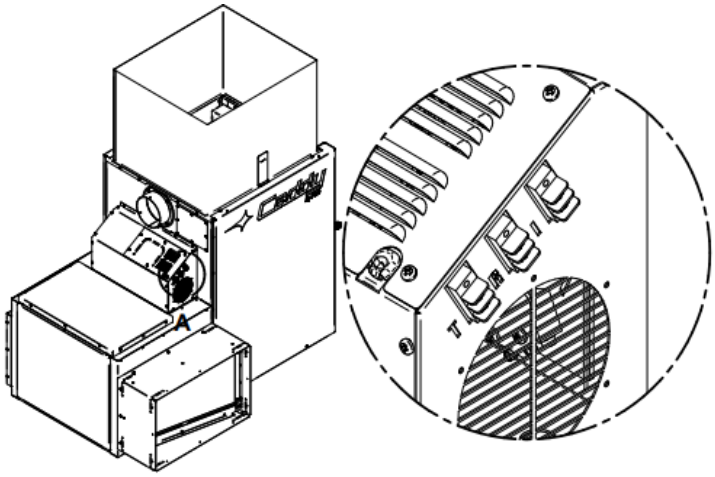

Here is an example of how to connect a thermostat:

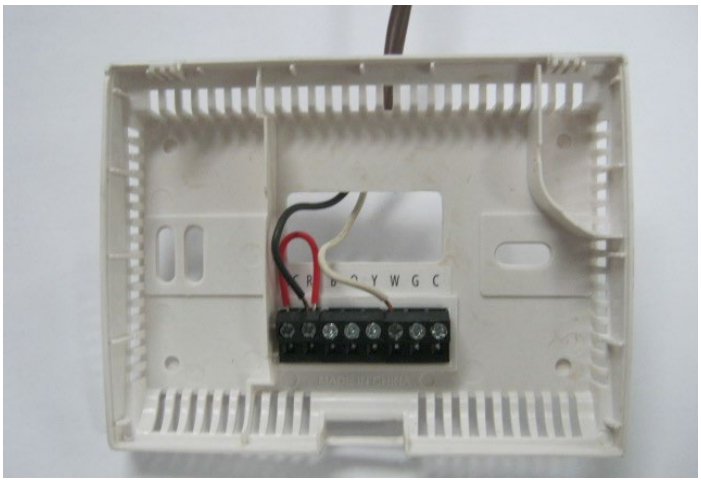

Connect one wire to the terminal block on the underside of the screw marked **"RH"** and the other wire to the underside of the screw marked **"W"**. The red jumper wire can be left in place. For further information, please refer to the manufacturer's instructions.

16.2 PARALLEL ADD-ON

This furnace can be connected in parallel with an existing furnace. **USA ONLY** This type of installation requires that the controls of both units be interconnected to prevent both units from heating to maximum simultaneously.

When the existing furnace thermostat calls for heat, the Caddy Advanced CR will reduce the combustion rate to minimum. Once the existing furnace thermostat is satisfied, the wood furnace will return to the control of its own thermostat.

There are two ways to connect your existing thermostat to your appliance:

1. From the existing furnace terminal block, connect 2 new wires **(B)** from the existing thermostat wires **(A) (R and W)** and attach them to the Caddy Advanced CR terminal block "I"

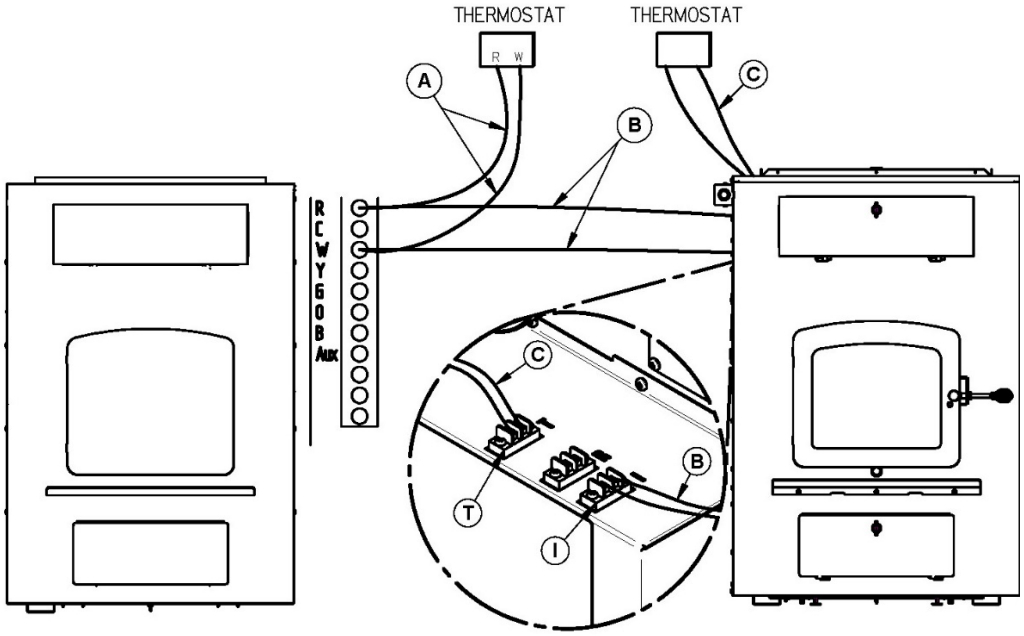

EXISTING FURNACE **USA ONLY**	ADD-ON FURNACE **USA ONLY**

2. From the thermostat connected to the existing furnace, connect 2 new wires **(B)** to terminals **"R"** and **"W"** of your existing furnace thermostat and attach them to the Caddy Advanced CR add-on terminal block "I".

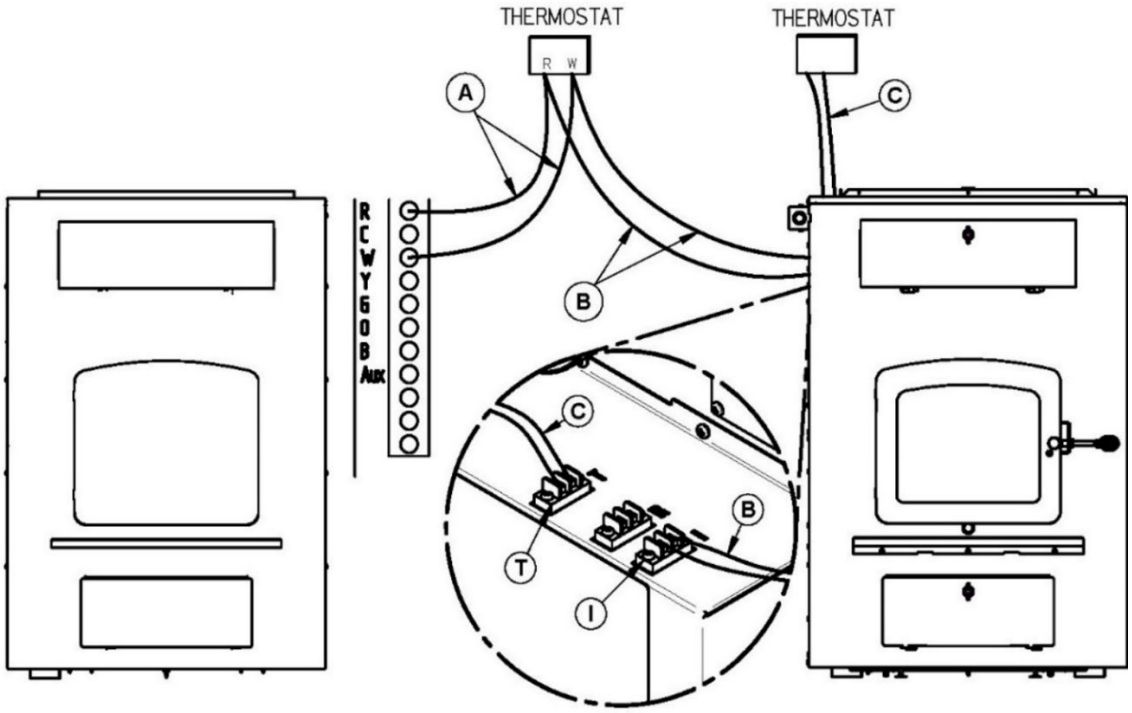

EXISTING FURNACE **USA ONLY**	ADD-ON FURNACE **USA ONLY**

17 FURNACE OPERATION

17.1 HOW IT WORKS

The Caddy Advanced CR furnace features a self-regulated combustion air supply control system. Using two temperature sensors in the combustion chamber that measure temperature in real time, your furnace will automatically adjust the amount of combustion air required to achieve the cleanest, most efficient combustion.

Coupled with the thermostat, the furnace will automatically modulate the combustion rate according to thermostatic demand. When the thermostat calls for heat, combustion will be at its maximum burn rate. Conversely, when the thermostat is satisfied with heat, the combustion burn rate will be slowed down to maximum.

A third temperature sensor located in the plenum controls the air distribution fan. This will distribute the necessary heat in your ducts to satisfy the thermostat while maintaining a safe temperature in your heating system.

17.2 HOW RELOAD BUTTON WORKS

The furnace is equipped with a backlit reload button located on the front. To optimize combustion during lighting and reloading, it is necessary to press the reload button. When the button is pressed, it will flash rapidly three times. Automatically the combustion air supply will be increased to its maximum, facilitating ignition and reloading.

The indicator light on the button shows the status of your furnace in relation to thermostatic demand and the available heat. See the table below for details of each state.

LED button states	Meaning	Furnace status
Light is ON 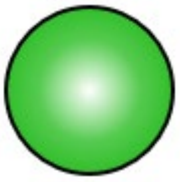	The thermostat calls for heat and heat is available in the combustion chamber.	**Maximum energy:** The furnace goes to maximum burn rate and attempts to provide maximum heat while maintaining clean and efficient combustion. Fan blows at normal speed.
Light is OFF 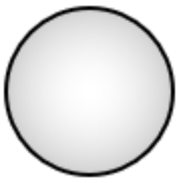	The furnace is cold. .(Furnace is cold (Does not take thermostat status into consideration)	**Low energy:** The furnace is cold and needs to be relit with paper and kindling to provide heat.
Light blinking slowly (1.5 second per blink)	The thermostat does not call for heat and there is heat available in the combustion chamber.	**Energy saving:** The furnace switches to minimum combustion and distributes as little heat as possible through the distribution air ducts to save wood while maintaining clean and efficient combustion. The fan cycles to remove excess heat.
Light blinking quickly (5 blinks per second):	The furnace has reached its maximum temperature.	**Thermal protection:** The furnace control system reduces the supply of combustion air to a minimum. If combustion chamber maximum combustion chamber temperature is reached, fan will blow at normal speed. If maximum plenum temperature is reached, fan will blow at maximum speed. **DO NOT ADD WOOD!**

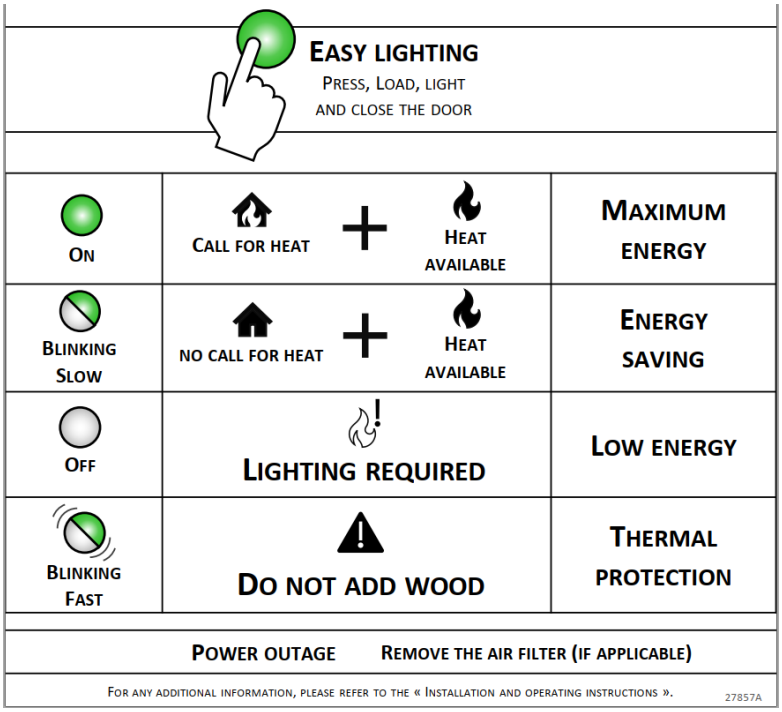

17.3 HOW TO LIGHT AND RELOAD THE FURNACE

Always keep a maximum of 4 inches of ash in the combustion chamber. Empty the ash drawer weekly to keep the furnace running smoothly. For clean, efficient combustion always keep some space between the logs and leave at least 4 inches of space in front of the logs.

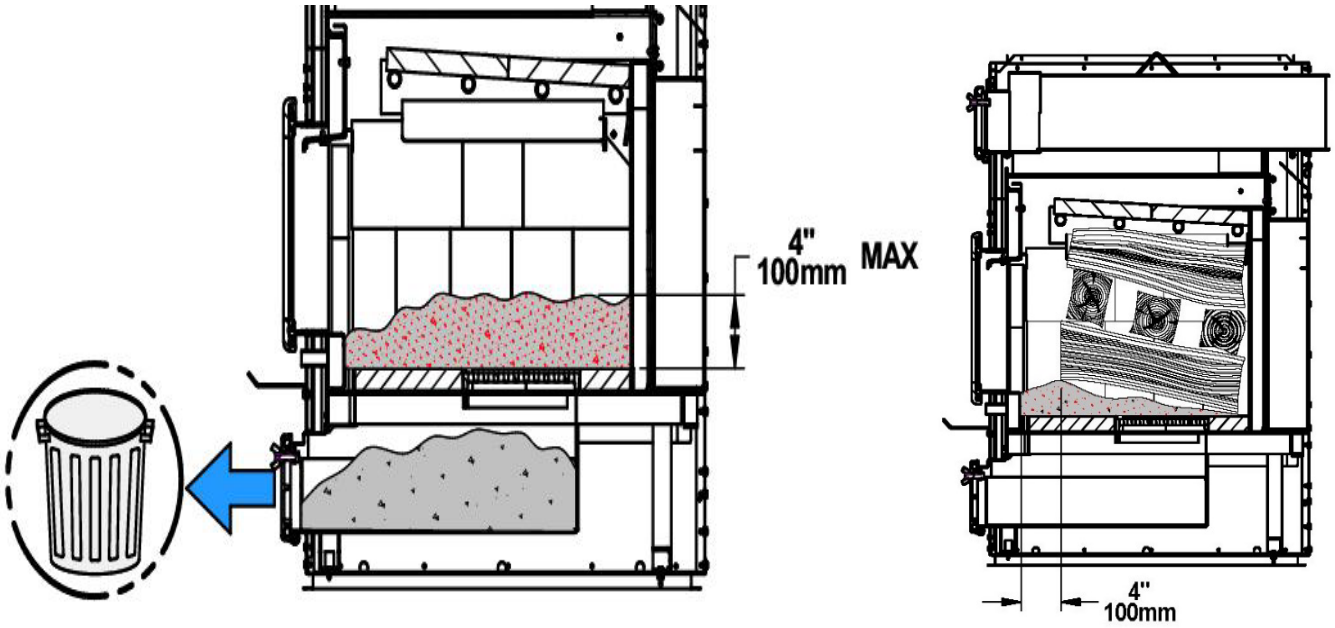

.

17.3.1 COLD START AND COAL EMBER BED LIGHTING (The led button light is OFF)

1. Press reload button before opening the door.	
2. Place paper and kindling on top of the ash grate.	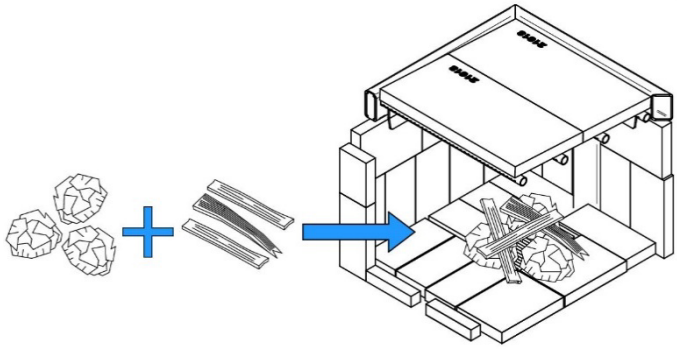
3. Place two logs North & South on each side of the kindling.	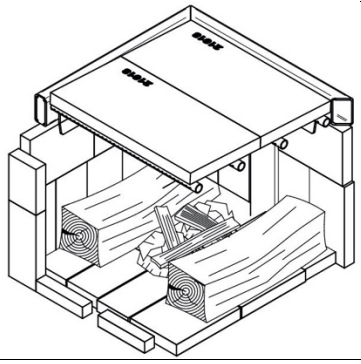
4. Superimpose logs perpendicularly over the first two logs.	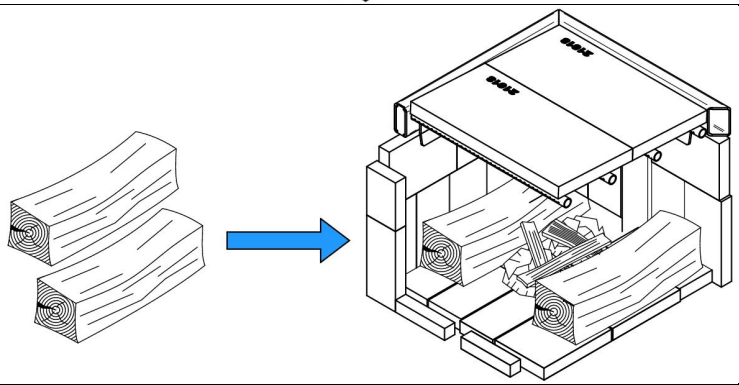
5. Light the paper and leave the door ajar (45 degree). Wait until the kindling and the logs catch fire. Then close the door.	
Important: Never leave the furnace unattended with the door opened.	

17.3.2 HOT EMBER BED RELOAD (The led button light is ON or slowly blinking)

1. Press reload button before opening the door.	
2. Open the door and bring hot embers to the front.	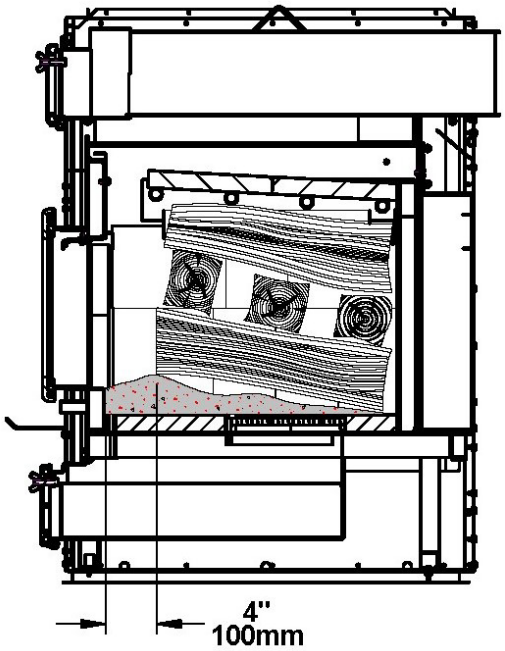
3. Load two logs North & South at the back. Superimpose logs perpendicularly over the first two logs. Always leave 4" of free space in the front.	
4. Leave the door ajar (45 degree) until the first flames appear. Then close the door.	
Important: Never leave the furnace unattended with the door opened.	

17.4 YOUR FIRST FIRES

DANGER

Risk of Fire or Explosion

CAUTION - Hot Surfaces:

Keep children away!

Do not touch during operation

Two things will happen when burning the first few fires; the paint will cure, and the internal components of the furnace will condition.

As the paint cures, certain chemical elements vaporize. The vapors are non-toxic but have bad smell. Fresh paint fumes can also cause false alarms in smoke detectors. So, when lighting the furnace for the first times, be prepared by opening doors and/or windows to ventilate the home. Burn two or three small fires to begin the curing and conditioning process. Then light larger, hotter fires until the furnace no longer smells of paint.

17.5 LIGHTING FIRES

Each person who heats with wood develops their own favorite method of building and lighting fires. Whatever method you choose, your goal should be to get a hot fire burning quickly. A fire that starts fast produces less smoke and creates less creosote in the chimney.

Here are **three popular and effective ways to start wood fires**.

17.5.1 CONVENTIONAL FIRE STARTING

The conventional way to build a wood fire is to bunch up 5 to 10 sheets of plain newspaper and place them in the combustion chamber. Next, place a dozen or so pieces of fine kindling on the newspaper. This kindling should be very thin; less than 1” (25 mm). Next, place some larger kindling pieces on the fine kindling. Press the reload button and light the newspaper. If you have a tall, straight venting system you should be able to close the door immediately. If your venting system has elbows or an outside chimney, you may need to leave the door ajar for a few minutes as the newspaper ignites and heat in the chimney produces some draft. Once the fire has ignited, close the door.

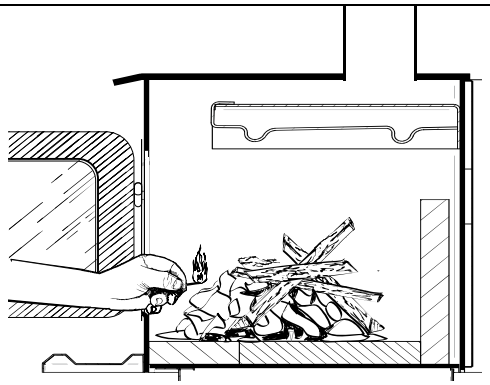

A conventional kindling fire with paper under finely split wood.

DO NOT LEAVE THE FURNACE UNATTENDED WHEN THE DOOR IS SLIGHTLY OPENED DURING LIGHTING. ALWAYS CLOSE THE DOOR AFTER LIGHTING.

After the kindling fire has mostly burned, you can add firewood pieces until you have a fire of the desired intensity for the weather conditions.

17.5.2 THE TOP-DOWN FIRE

The top-down fire-starting method solves two problems encountered when using the traditional method: firstly, it does not collapse in on itself and smother itself as it burns. Secondly, it is not necessary to build up the fire gradually because the combustion chamber is loaded before the fire is lit. A top-down fire can provide up to two hours of heating or more. The top-down method only works properly if the wood is well-seasoned.

Start by placing three or four full-sized split pieces of dry firewood in the combustion chamber. Next, place 4 or 5 more finely split pieces of firewood (2" to 3" (51 mm to 76 mm) diameter) on the base logs at right angles (log cabin style). Now place about a dozen pieces of finely split kindling on the second layer at right angles.

The fire is then topped with about 5 balls of newspaper. You can just bunch them up and stuff them in between the kindling and the underside of the baffle. Or you can make newspaper knots by rolling up single sheets corner to corner and tying a knot in them. The advantage of knots is that they do not roll off the fire as they burn. Light the newspaper and watch as the fire burns from top to bottom.

17.5.3 TWO PARALLEL LOGS

Place two spit logs in the combustion chamber. Place a few sheets of twisted newspaper between the logs. Now place some fine kindling across the two logs and some larger kindling across those, log cabin style. Light the newspaper.

17.5.4 USING FIRE STARTERS

Many people like to use commercial firelighters instead of newspaper. Some of these are made from sawdust and wax, while others are made from special flammable chemicals. Follow package instructions for use.

Gel starters can also be used, but only to light a fire, in a cold combustion chamber without hot embers inside.

18 MAINTAINING WOOD FIRES

18.1 GENERAL ADVICE

Wood heating is very different than other forms of heating. Do not expect steady heat output from your furnace. It is normal for its temperature to rise after a new load of wood is ignited and for its temperature to gradually decline as the fire progresses. This rising and falling of temperature can be matched to your household routines. For example, the area temperature can be cooler when you are active, such as when doing housework or cooking, and it can be warmer when you are inactive, such as when reading or watching television.

Wood burns best in cycles. A cycle starts when a new load of wood is ignited by hot coals and ends when that load has been consumed down to a bed of charcoal about the same size as it was when the wood was loaded. Do not attempt to produce a steady heat output by placing a single log on the fire at regular intervals. Always place at least three, and preferably more, pieces on the fire at a time so that the heat radiated from one piece helps to ignite the pieces next to it. Each load of wood should provide several hours of heating. The size of each load can be matched to the amount of heat needed.

When you burn in cycles, you rarely need to open the furnace's loading door while the wood is burning. This is an advantage because there is more chance that smoke will leak from the furnace when the door is opened as a full fire is burning. This is especially true if the chimney connector has 90° elbows and if the chimney runs up the outside wall of the home.

IMPORTANT

WHEN RELOADING, MAKE SURE YOU KEEP THE AIR INLETS LOCATED AT THE BOTTOM OF THE DOOR INSIDE THE COMBUSTION CHAMBER FREE OF ASH.

OPENING PROCEDURE FOR THE LOADING DOOR

TO MINIMISE THE RISK OF SMOKE SPILLAGE, CRACK THE DOOR OPEN ABOUT AN INCH (25 MM) AND WAIT ABOUT 10 SECONDS BEFORE OPENING IT WIDE TO ALLOW STABILISATION OF THE PRESSURE INSIDE THE FURNACE.

18.1.1 RAKING EMBERS

Rekindle the fire when you notice that the room temperature has fallen. Do not operate your furnace at too low a setting. Keep the air inlet opened long enough during the fire start-up to prevent the fire from smoldering, which could stain the glass. You will find most of the remaining charcoal at the back of the combustion chamber, furthest from the door. Rake these coals towards the door before loading. There are two reasons for this raking of the coals. First, it concentrates them near where most of the combustion air enters the combustion chamber and where they can ignite the new load quickly, and second, the charcoal will not be smothered by the new load of wood.

If you were to simply spread the charcoal out, the new load will smolder for a long time before igniting.

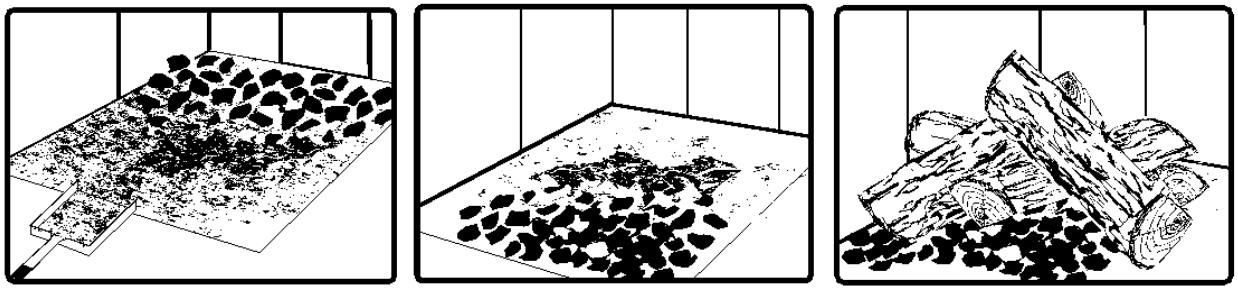

Remove ash first, and then rake charcoal towards the front of the combustion chamber before loading so that it will ignite the new load. Some people confuse ash (mostly a gray powder) with charcoal remaining in their combustion chamber. Charcoal is wood in its final stages of combustion with significant heating value remaining and should not be discarded until fully consumed.

18.1.2 RELOADING WITH EMBERS

Press the reload button, place the new load of wood on and behind the embers, not too close to the glass. Close the door. Lighting each new load of wood accomplishes several things:

- Removes moisture from the wood surface.
- Creates a layer of char on the wood, which slows the release of smoke.
- Heats the combustion chamber components so they reflect heat back to the fire.
- Heats the chimney to produce a strong, steady draft for the rest of the cycle.

Do not leave the furnace unattended while a new load is being fired hot.

DO NOT OVERFIRE.
When you burn a new load of wood hot, to heat up the wood, the furnace and the chimney, the result will be a surge of heat from the furnace. This heat surge is welcome when the room temperature is a little lower than desirable, but not when the space is already warm. Therefore, allow each load of wood to burn completely so that the space begins to cool off a little before adding more wood.

18.1.3 CONTROL OF THE AIR SUPPLY

Once the firewood is lit and the combustion chamber and chimney are hot, the air intake controls will gradually close to maintain optimum combustion chamber temperature.

18.1.4 BUILDING DIFFERENT FIRES FOR DIFFERENT NEEDS

Your home will need far less heat in October than in January to maintain a comfortable temperature. If you fill the combustion chamber full in the fall, you will either overheat the space or turn the furnace down so much that the fire will smolder and be inefficient. Note that a small, intense fire burns much cleaner than a large, smothered one. Here are a few suggestions for building fires to suit different heating needs.

18.1.5 SMALL FIRES TO TAKE THE CHILL OUT OF THE HOME

To build a small fire that will produce a low heat output, use small pieces of firewood and load them crosswise in the combustion chamber. The pieces should only be 3” (76 mm) to 4” (102 mm) in diameter. Once you’ve brought the embers to the frond, place two pieces parallel to each other corner to corner in the combustion chamber and lay two more crosswise on top. This type of fire is good for mild temperatures when you are around to tend the furnace and should provide enough heat for four hours or more. Small fires like this are a good time to use soft wood so there will be less chance of overheating the home.

18.1.6 LONG LASTING LOW OUTPUT FIRES

Sometimes you will want to build a fire to last up to eight hours but won’t produce intense heat. In this case, use soft wood and place the logs compactly in the combustion chamber, so that the pieces are packed tightly together.

18.1.7 HIGH OUTPUT FIRES FOR COLD WEATHER

When the heat demand is high during cold weather, you will need a steady, lively fire. This is the time to burn your largest pieces of hardwood logs if any are available. Place the largest logs at the back of the combustion chamber and place the rest of the pieces compactly. A densely built fire like this will produce the longest burn your furnace can give.

The combustion chamber has no loading limit. It can be filled with wood up to the secondary air tubes.

18.1.8 MAXIMUM BURN CYCLE TIMES

The combustion time or cycle is the period between the addition of wood to a bed of embers and the consumption of this wood back to a bed of embers of the same size. A combustion cycle is divided into two main phases, the first being the flame phase which lasts for roughly the first half of the burn cycle and the second being the ember phase, during which there is little or no flame. The duration of a combustion cycle will vary according to the following factors:

- Combustion chamber size
- Quantity of wood loaded
- Species of wood you burn
- Size of the space to be heated
- Climate zone you live in
- Time of year
- The moisture content of the wood
- Time cycle for the thermostat to call for heat

18.2 PROLONGED POWER OUTAGE

To reduce the risk of overheating in the event of a prolonged power outage (more than 10 minutes), the air intake controls will close automatically. In this scenario, remove the air filter to improve the natural circulation (convection) of warm air rising into the plenum and beyond. To avoid the possibility of overheating, do not load the furnace to more than 50% of its capacity.

19 THE VENTING SYSTEM

19.1 GENERAL

The venting system, made of the chimney and the connecting pipe between the furnace and the chimney, acts as the engine that drives the wood-burning system. Even the best furnace will not function safely and efficiently if it is not connected to a suitable chimney.

The heat contained in the exhaust gases passing from the furnace to chimney connector, and then to the chimney is not wasted heat. This heat used by the chimney to create the draft that draws in combustion air, keeps smoke inside the stove and safely exhausts the gases to the open air. The heat contained in the exhaust gases can be thought of as the fuel used by the chimney to create draft.

19.2 SUITABLE CHIMNEYS

This furnace will provide optimum efficiency and performance when connected to a 6" diameter chimney flue system. The connection to a chimney having a diameter of at least 5" **(Canada only)** or no more than 7" is permitted if it allows the proper evacuation of combustion gases and that such application is verified and authorized by a qualified installer. Otherwise, the flue diameter must be 6".

To be suitable, a factory-built metal chimney must comply with UL 103 HT (U.S.A.) or ULC S629 (Canada).

19.3 FACTORY-BUILT METAL CHIMNEYS

These are often referred to as “high temperature” chimneys because they have specific characteristics to withstand temperatures that can be created by wood-burning appliances. Factory-built chimneys are tested as a system, with all the components required for installation. The instructions provided with the chimney by its manufacturer are the only reliable source of installation guidelines. To be safe and effective, the chimney must be installed exactly in accordance with the manufacturer’s guidelines. Only components intended for the brand and model of chimney should be used. Never fabricate or substitute parts from other chimney brands. The chimney must be of a type suitable for solid fuel.

To maintain an effective vapor barrier, insulation and waterproofing, at the chimney and outside flue pipe, a roof flashing must be installed and sealed with a silicone-based adhesive.

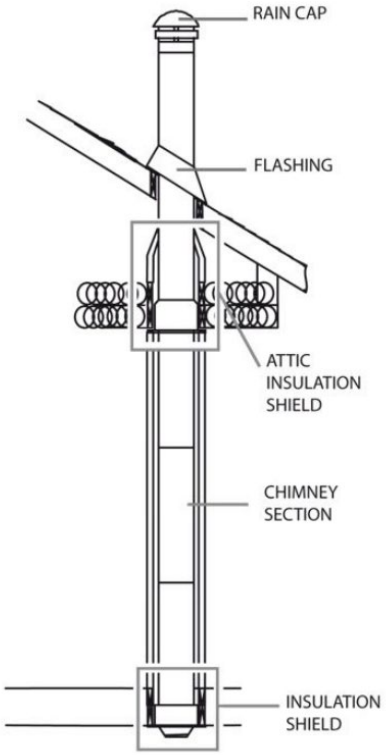

19.3.1 MASONRY CHIMNEYS

The furnace may also be connected to a masonry chimney, provided the chimney complies with the construction rules found in the local building code. The chimney must be fitted with a clay liner or an appropriate approved stainless-steel liner. If the masonry chimney has a square or rectangular liner that is larger in cross-sectional area than a round 6" flue, it should be relined with an approved 6" stainless steel liner. Do not downsize the flue to less than 6" unless the venting system is straight and exceeds 25 feet in height. When passing through a combustible wall, the use of a certified insulated non-combustible wall pass-thru thimble is required.

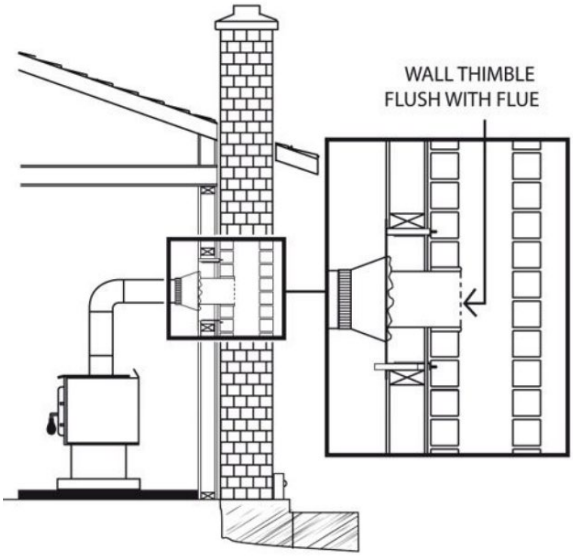

19.4 MINIMUM CHIMNEY HEIGHT

The top of the chimney should be tall enough to overcome air turbulence caused when wind blows against the home and its roof. The chimney must extend at least 3 ft. (1 m) above the highest point of contact with the roof, and at least 2 ft. (60 cm) higher than any roof line or obstacle within a horizontal distance of 10 ft. (3 m).

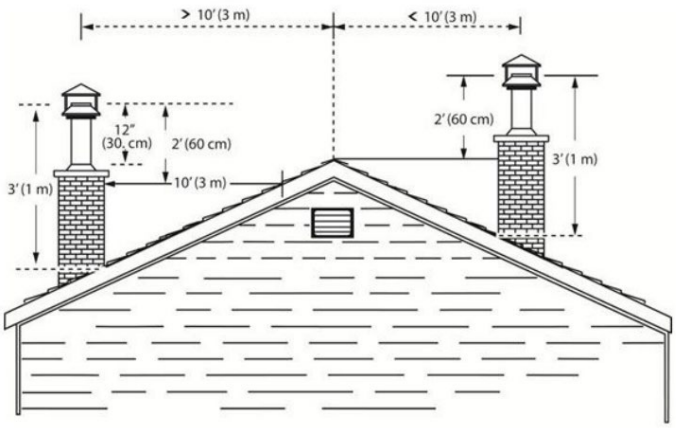

19.5 CHIMNEY LOCATION

Because the venting system is the engine that drives the wood heating system, it must have the right characteristics. The signs of bad system design are cold downdrafts when there is no fire in the furnace, slow ignition of new fire, and smoke roll-out when the door is opened to reload the furnace. To avoid this, there are two basic guidelines to follow. First, the chimney should be installed up through the heated space of the home, not out and up an outside wall. Second, the chimney should pass through the upper part of the building in or near the highest heated area.

Venting systems that are installed vertically, directly from the furnace flue collar provide the best performance. Chimneys installed in the heated part of the home tend to produce a slight amount of draft, even when there is no fire burning. This means that when a fire is lit, the smoke goes up the chimney and a strong draft quickly develop as the chimney flue heats up. Although widespread in North America, chimneys that pass through a wall and are installed along an exterior wall can cause problems.

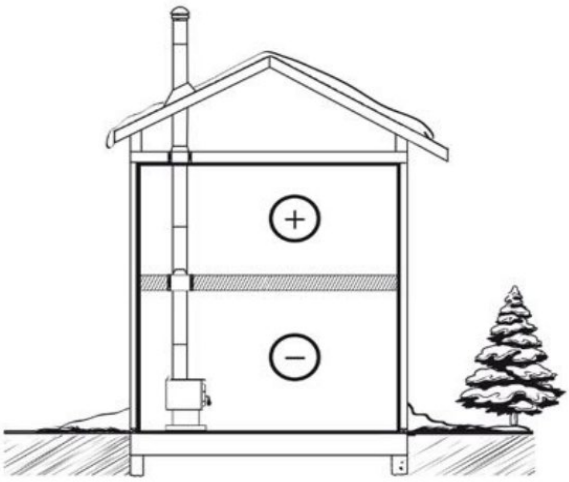

Good System Design

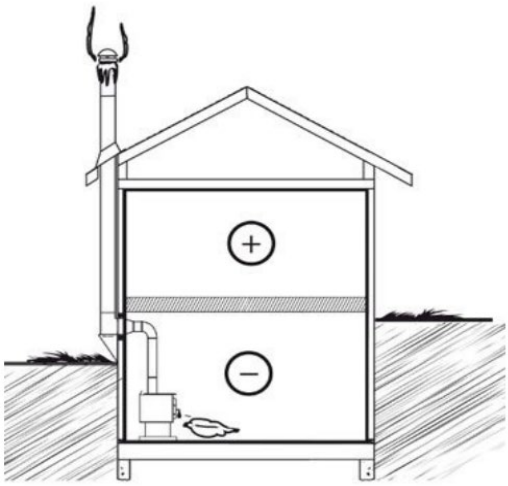

Inferior System Design

When it is cold outside, the warmer, lighter air in the home tends to rise. This creates a slight pressure difference in the home. Known as, “stack effect”, this produces a slight negative pressure in the lower part of the home (relative to the outside) and a zone of slightly high pressure in the higher part of the home. When there is no fire burning in an appliance connected to a chimney lower than the warm space inside the home, the slight negative pressure in the lower part of the home will oppose the desired up-draft in the chimney. This occurs for the two following reasons:

First, the chimney runs up the outside of the home, so the air in it is colder and denser than the warm air in the home. Second, the chimney is shorter than the heated space of the home, meaning the negative pressure in the lower part of the home will draw cold air down the chimney, through the furnace and into the room. Even the best furnace will not work well when connected to this chimney.

19.6 SUPPLY OF COMBUSTION AIR

For the furnace draft to function properly, the room must have an outside or fresh air inlet of at least 5" in diameter, sufficient to replenish the volume of air leaving through the chimney. In well insulated homes, an air inlet must be fitted through the exterior wall that is not exposed to prevailing winds, depending on the ambient conditions of the home. The air intake must be installed in such a way that it cannot be blocked.

When the furnace and the chimney are completely cold, it may be necessary to provide an external air supply by opening a door or a window for a short period, prior to lighting. A home constructed or renovated with an air-tight vapor barrier is prone to require a supply of outside air to keep the appliance operating properly.

In this case, avoid, during startups, using appliances that evacuate air outside of the home, such as:

- Cookstove range hood
- Bathroom vent
- Air exchange system
- Central vacuum cleaner
- Dryer

Fresh air can be supplied in a number of ways, provided they comply with CSA B365 and NFPA 211.

In Canada, wood-burning appliances are not required to have an outside combustion air supply (except for mobile homes). Research has shown that these supplies do not compensate for home depressurization and may not be sufficient to provide combustion air on windy days. However, to reduce the risks against smoke spillage due to home depressurization, a carbon monoxide (CO) detector is required in the room where the appliance is installed. The CO detector will provide warning if for any reason the wood-burning appliance fails to function correctly.

19.6.1 Conventional Home

The safest and most reliable supply of combustion air for a wood-burning appliance is from the room in which it is installed. Room air is already preheated so it will not cool the fire, and its availability is unaffected by wind pressures on the home. Contrary to popular belief, almost all new, hermetically sealed homes have enough natural leakage to provide the small amount of air needed by the furnace. The only time in which wood-burning appliance may not have adequate access to combustion air is if the operation of a powerful exhaust device (such as a range hood) causes the pressure in the home to become negative in relation to the outside air.

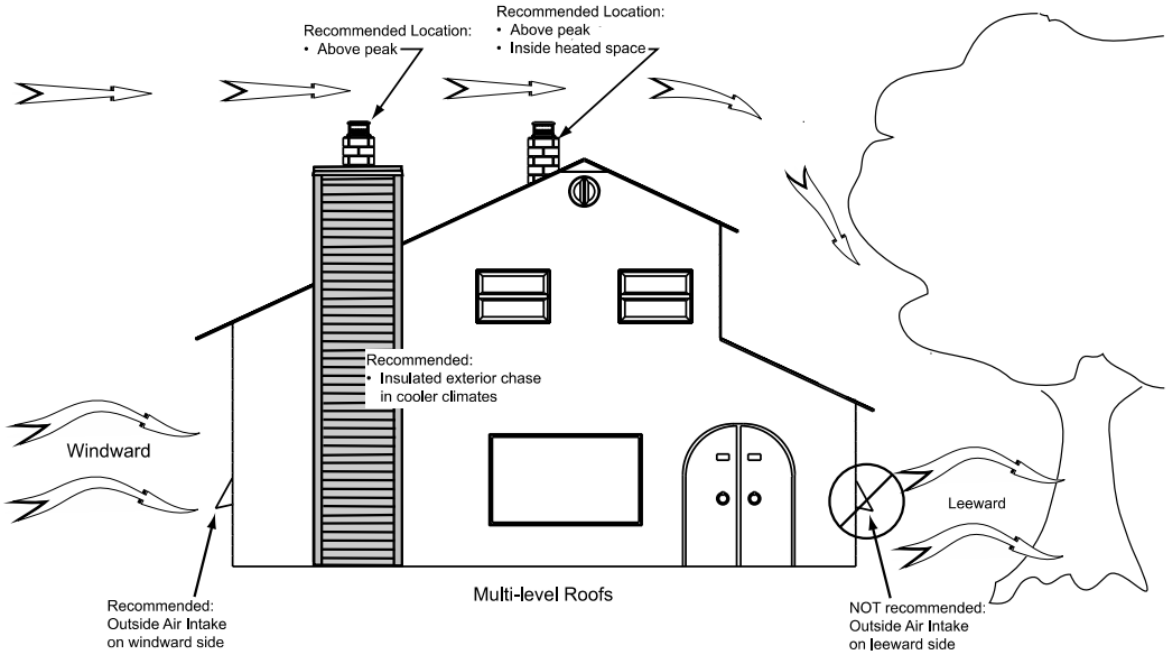

Air supply in conventional homes

If an air intake is installed through the wall of the home, its pressure can vary during windy conditions. If there are changes in the performance of the wood-burning appliance in windy conditions, and in particular if puffs of smoke are coming out of the appliance, the air supply duct should be disconnected from the wood-burning appliance to determine whether it is the cause of the problem. In certain windy conditions, negative pressure near the weather cap outside the home may draw hot exhaust gases from the wood-burning appliance into the duct, towards the outdoors. Check the outside air intake duct for soot deposits when the full system is cleaned and inspected at least once each year.

To reduce the risks associated with smoke spillage due to home depressurization, a carbon monoxide (CO) and a smoke detector are required in the room where the wood-burning appliance is installed. The CO detector will sound if, for any reason, the wood-burning appliance is not functioning properly.

19.7 INSTALLING THE CHIMNEY CONNECTOR

The chimney connector, or chimney pipe, is the single- or double-wall pipe installed between the wood-burning appliance flue and the chimney collar. Single-wall pipe sections are available at most hardware and building supply stores. These sections have generally not been tested to a specific standard, nor have they been approved. Consequently, a series of rules found in solid-fuel heating appliance installation codes apply to the installation of single-wall pipe. Double-wall chimney connectors are tested and certified. The rules for double-wall pipes can be found in the manufacturer's installation instructions. These rules are very different from those for single-wall pipes. Please refer to the wood-burning appliance's installation and operating manual, options section, to find out if any special configuration is required for your product.

19.7.1 INSTALLATION OF SINGLE WALL CHIMNEY CONNECTOR

The chimney connector assembly has been called “the weak link” in wood-burning system safety, because failure to install the connector properly (which has happened many times in the past) can result in house fires.

The best flue pipe installation is one that runs straight up from the wood-burning appliance to the base of the chimney without any bends. Straight installations are less likely to cause problems, such as smoke spill-back, when the door is opened for reloading. They are also more stable and easier to maintain than installations with elbows. Horizontal runs of flue pipe should be avoided where possible as they reduce chimney draft.

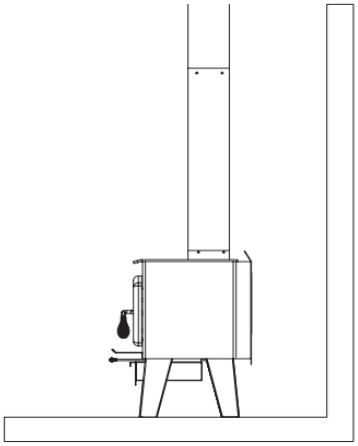

Best

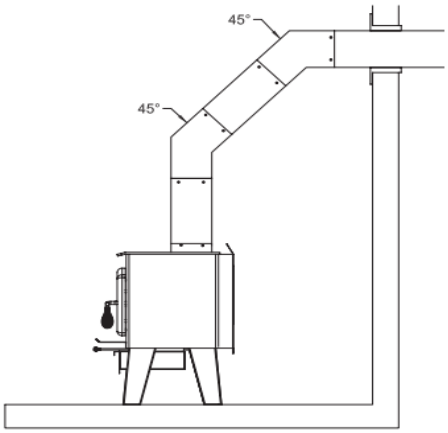

Acceptable

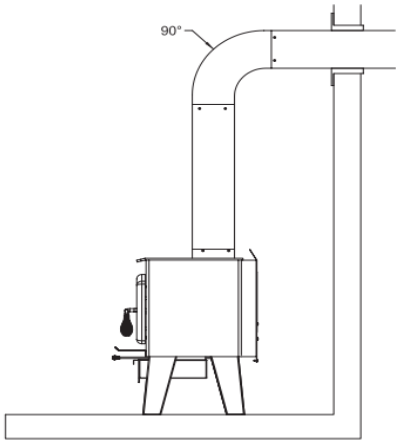

Avoid

The rules below are based on those found in the CSA-B365 and NFPA 211 installation code. Please follow these installation instructions carefully, or those enforced by local code.

- Maximum overall length of horizontal pipe: 10 ft. (3 m) including elbows.
- Minimum clearance from combustible material: 18" (450 mm). Minimum clearance may be reduced by 50 percent to 9" (225 mm) if suitable shielding is installed either on the pipe or on the combustible surface.
- The installation should be as short and straight as possible between the wood-burning appliance and chimney. The installation should be as short and straight as possible between the wood-burning appliance and the chimney. It is often preferable to use two 45-degree elbows rather than a single 90-degree elbow, as this will create less turbulence in the smoke and shorten the horizontal section.

- The minimum overall height of the chimney system, measured from the back of the furnace to the chimney cap should be at least 12 ft. (3.66 m). A chimney that is too short may lack the “tunnel effect” required to obtain adequate draft.
- Maximum number of 90-degree elbows: 2.
- Maximum unsupported horizontal length: 3 ft. (1 m).
- Galvanized flue pipes must not be used as their coatings vaporizes at high temperatures producing dangerous gases. Use black smoke pipes.
- Flue pipes must be at least 24 gauge in thickness.
- Flue pipe connections must overlap by at least 1 ¼" (30 mm).
- Each joint in the installation must be fastened with at least three screws.
- The installation must be able to expand. Elbows in installations allow for expansion; straight installations must include coupling pipe with one end unfastened, or a telescopic section.
- Minimum upward slope towards the chimney: ¼ in/ft. (20 mm/m).
- One end of the smoke pipe must be securely fastened to the flue collar of the appliance with 3 sheet metal screws and the other end securely fastened to the chimney.
- There must be provision for cleaning of the pipes, either through a clean out or by removal of the pipe assembly. Removal of the assembly should not require that the appliance be moved.
- The male ends of the black pipe sections must be oriented towards the appliance so that falling ash and condensation remain inside the pipe.

- A flue pipe must never pass through a combustible floor or ceiling or through an attic, roof space, closet, or concealed space. Where passage through a wall or partition of combustible material is desired, the installation must conform to CAN/CSA-B365 and NFPA 211, Installation Code for Solid-Fuel-Burning Appliances and Equipment.
- A straight up connector assembly needs either a telescopic length or an inspection wrap (pipe coupler) to allow it to be assembled and disassembled without moving the stove.
- A straight flue pipe installation offers the least restriction to smoke exhaust and results in a stronger draft. Straight installations also need less maintenance because there are no corners for creosote to settle.
- The chimney and chimney connector must be clean and in good condition.

20 FURNACE MAINTENANCE

Your new furnace will give you years of reliable service if you use and maintain it properly. Some of the internal components of the combustion chamber, such as firebricks, baffles, and air tubes, will wear out over time under intense heat. You should always replace defective parts with original parts (see section **18 EXPLODED DIAGRAM AND PARTS LIST**). For firing each load hot to begin a cycle as described above will not cause premature deterioration of the furnace. However, if the thermostat is always calling for heat, this may eventually damage the furnace. The more the furnace overheats during combustion cycles, the faster its components will deteriorate. For that reason, **never leave the furnace unattended while a new load is being fired hot**.

Recommended Maintenance Scheduled

Use this as a guide when the furnace is used under normal conditions.

Components	Weekly or after **± 1/3 Face cord**	Monthly **± 1 Face cord**	Annually or **± 3 Face cord**
Glass	Inspect and Clean*		
Combustion Chamber	Empty / Vacuum*	Inspect	
Ash drawer	Empty*		
Air filter		Clean or replace every three months	
Firebricks		Inspect	
Baffle		Inspect	
Air tube		Inspect	
Heat Exchanger		Inspect, Sweep and Clean*	
Door tightness		Inspect and adjust or replace gasket if necessary	
Thermocouples			Inspect and Clean
Chimney			Sweep and Clean if necessary*
Blower			Clean

Face cord; 4’ x 8’ x 16" (≈42 ft^3)
*Cleaning frequency may vary depending on the type of fuel used. Fuel with higher moisture and ash content will increase cleaning frequency.

CAUTION! IT IS PARTICULARLY IMPORTANT TO CLEAN THE HEAT EXCHANGERS, FLUE PIPE AND CHIMNEY THOROUGHLY AT THE END OF THE HEATING SEASON TO MINIMIZE AND PREVENT CORROSION DURING THE SUMMER MONTHS, CAUSED BY ACCUMULATED ASH AND/OR SOOT AND/OR CREOSOTE.

20.1 ASH REMOVAL

Ash should be removed from the combustion chamber every week during the heating season. Do not allow ash to accumulate excessively in the combustion chamber as it will interfere with proper furnace operation. A little remaining ash is not a problem, but it is not imperative to remove all the ashes, as aggressive cleaning can shorten the life of the firebricks. Ironically some hardwoods produce much more ash than pine, spruce and fir.

The best time to remove ash is after an overnight fire when the furnace is relatively cool, but there is still some chimney draft to draw the ash dust into the furnace and prevent it from escaping into the room.

Once the ashes have been removed from the furnace and **placed in a tightly covered metal container**, they should be taken outside immediately. The closed container of ashes should be placed on a non-combustible floor or on the ground well **away from all combustible materials pending final disposal**. Ashes normally contain some hot embers that can remain hot for several days. If ashes are disposed of by burial in the ground or otherwise dispersed on site, they should be kept in the closed container until they have cooled completely. No other waste should be placed in this container.

NEVER STORE ASHES INDOORS OR IN A NON-METALIC CONTAINER OR ON A WOODEN DECK. ALWAYS LEAVE THE CONTAINER ON A NON-COMBUSTIBLE FLOOR.

20.2 CLEANING DOOR GLASS

Under normal conditions, your door glass should stay relatively clean. If your firewood is sufficiently dry and you follow the operating instructions in this manual, a whitish, dusty deposit will form on the inner surface of the glass after a week or so of use. This is normal and can be easily removed when the furnace is cool. Wipe the glass with a damp cloth or paper towel and then dry. **Never attempt to clean the glass when the furnace is hot.**

In spring and fall, when the furnace cycles less often, you may notice some light brown stains, especially in the lower corners of the glass. This indicates that the combustion has been incomplete and some of the smoke has condensed on the glass. When the weather is mild, you may find that letting the fire die down is better than trying to maintain it. Use the technique described above to build fires that will take the chill out of your home.

If brown spots should appear on the glass, they can be removed with special glass cleaners for wood-burning appliances. Do not use abrasive cleaners on the glass. The deposits that form on the glass are the best indication of your fuel quality and how well you are doing in operating the furnace. Your goal should be clear glass with no brown stains. If you continue to see brown stains on the glass, something about your fuel and operating procedure needs to be changed. Stains on the glass indicate incomplete wood combustion, which also means more smoke emissions and faster creosote formation in the chimney.

When brown streaks are coming from the edge of the glass, it is time to replace the gasket around the glass. The glass gasket must be self-adhesive. Follow the instructions in section **17.4REPLACEMENT OF GLASS AND GASKETS** for installation. Always replace gaskets with genuine parts. See section **20 EXPLODED DIAGRAM AND PARTS LIST.**

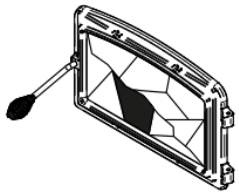

Do not clean the glass when the stove is hot.

Do not abuse the glass door by striking or slamming shut.

Do not use the stove if the glass is broken.

20.3 DOOR ADJUSTMENT

For optimum performance, the furnace door must provide a perfect seal with the combustion chamber. Door adjustment is preset at the factory. Over time, the gasket may sag, making readjustment of the door necessary. The tightness of the door seal can be verified by closing and latching the door on a strip of paper. The test must be performed all the way around the door. If the paper slips out easily at any point, either adjust the door or replace the gasket.

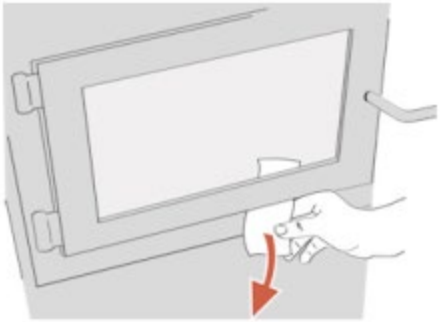

Door adjustment procedure:

1. Unscrew the locking pin **(B)** and nut **(A)** from the door.
2. To increase the pressure of the door on the gasket, turn the handle counterclockwise; to reduce the pressure of the door on the gasket, turn the handle clockwise.
3. Finally, screw- locking pin **(B)** back in about 1/4" (6 mm) deep, making sure to secure it with the nut **(A)**. If after adjustment the door does not seal properly, replace the door gasket.

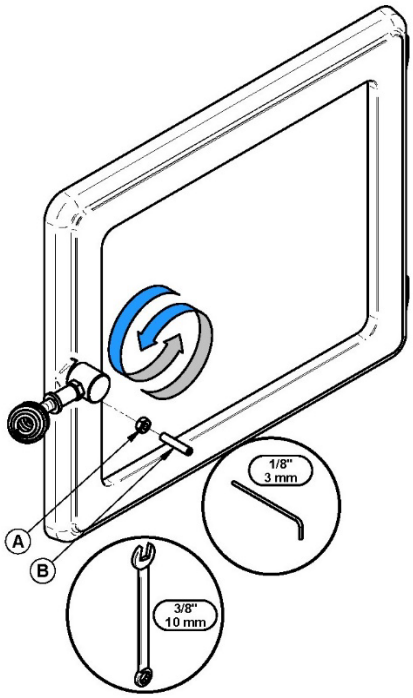

20.4 REPLACEMENT OF GLASS AND GASKETS

After a year or more of use, the door seal will compress and become hard which can allow air to pass through. You can check the air tightness of your door gasket by closing and locking the door on a piece of paper. The test must be performed all the way around the door. If the paper slips out easily at any point, either adjust the door or replace the gasket.

Always use a genuine gasket that you can purchase from your dealer or online at www.caddyfurnaces.com. The correct size and density of the gasket are important to ensure a good seal.

Never operate the furnace with a broken glass. When replacing the glass, be sure to use the proper ceramic glass. Ordering directly from your dealer or the manufacture is a good idea. The replacement glass supplied by SBI will always include the “self-adhesive flat glass gasket” installed on the replacement glass.

For the following steps, wearing gloves and safety glasses are recommended, as handling gaskets can irritate the skin and the glass can be sharp.

- To replace the door gasket, use steps 1 to 3 and 10 outlined below.
- To replace the glass, or glass gasket, use steps 1 and 3 to 9 outlined below.

1. Remove the door **(F)** and place it on a stable work surface, handle down.
2. Using pliers, remove door gasket **(A)**.
3. Using a small scraper or flathead screwdriver, remove the adhesive left in the door gasket grove then clean the groove using a commercial vacuum cleaner.
4. Use a Phillips screwdriver or a power drill to remove the screws **(B)** that holds the glass retainer moldings **(C)**. If the screws are older and difficult to remove, consider using a penetrating oil to loosen them first. Be careful to not break or strip these screws.
5. Remove glass frame **(D).**
6. Remove glass **(E)** (or pieces of glass if it is damaged) and clean the inside of the door frame.
7. Remove old glass gasket and discard.

8. Install the new gasket on the glass. Remove some of the paper covering the gasket adhesive. And center the gasket on the edge of the glass so that when folded and glued, the gasket is equal on both sides. Do not stretch the gasket during installation. Remove more of the paper and rotate the glass to facilitate and complete the installation of the gasket. When you return to the starting point, cut the gasket so that the ends overlap by about 1/2" (13 mm). If you purchase an SBI replacement glass, the glass gasket will have been installed on the glass for your convenience.

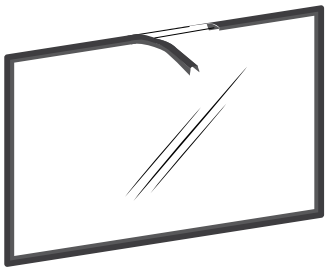

9. Reinstall glass **(E)** and glass frame **(D)** centering them in the door frame. Install the glass retainers **(C)** taking care not to over tighten the screws **(B)**. Note that the two main causes of glass breakage are uneven positioning in the door and over-tightened screws.

10. Install the new door gasket **(A)**. To do this, apply approximately 1/4" (6 mm) of adhesive to the bottom of the groove that holds the gasket in the door. Then lay the new gasket into it, starting from the center of the hinge side and taking care not to stretch the gasket during installation. Leave about 1/2" (13 mm) of gasket to extend beyond the door frame. Once jointed, push any protruding fibers back into the groove and into the adhesive. Install the door and let dry for 24 hours before using the furnace.

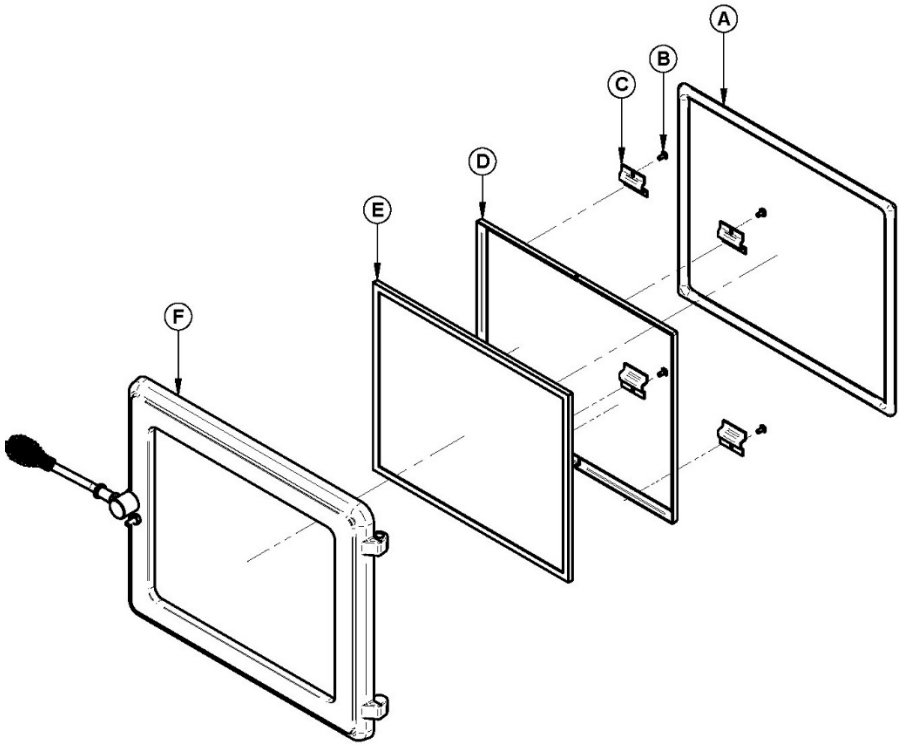

Do not abuse the glass door by striking or slamming shut. Do not use the furnace if the glass is missing, broken, or cracked. To change the glass, use the procedure described above.

20.5 MAINTENANCE OF FURNACE EXTERIOR FINISH

Do not attempt to clean or paint the various finishes of the furnace while it is hot. Painted surfaces can be wiped with a slightly damp cloth. Plated and/or enameled surfaces may be scratched by abrasive cleaners. To ensure that the finish retains its original luster, use only a soft, slightly damp cloth to clean plated or enameled surfaces.
If the paint is scratched or damaged, you can make your furnace look new again by repainting it with heat-resistant or enamel finish paint. Before painting, roughen the surface with fine sandpaper (unless enameled), wipe off any dust and apply two thin coats of paint. For best results, use the same paint that was originally used on the furnace, which is available in spray paint only. See your dealer for details.

20.6 HEAT EXCHANGERS CARE

Heat exchangers must be cleaned thoroughly at the end of each heating season. During summer months, air in basements is more humid, and with minimal air circulation within the furnace, it can mix with creosote and/or sooth deposits and form an acid that will accelerate the corrosion process and induce premature decay of the steel. Corrosion damages are not covered under warranty.

Smoke pipe and heat exchangers must be inspected regularly during the heating season. Access to the exchangers is easy and does not require tools.

1. Unscrew the wing nut **(B)** and remove washer **(C)** from the exchanger access door.

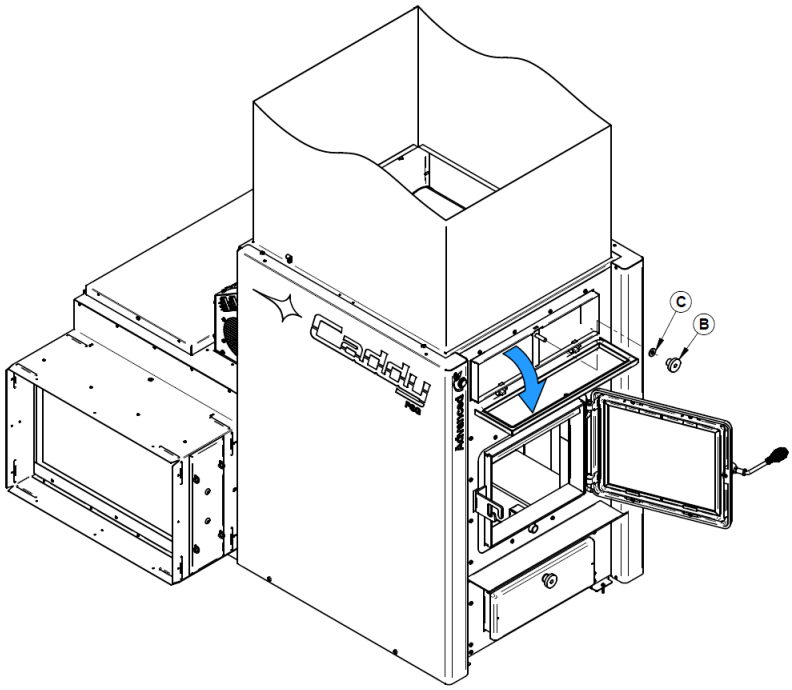

2. Move the baffle **(A)** of the combustion chamber forward.

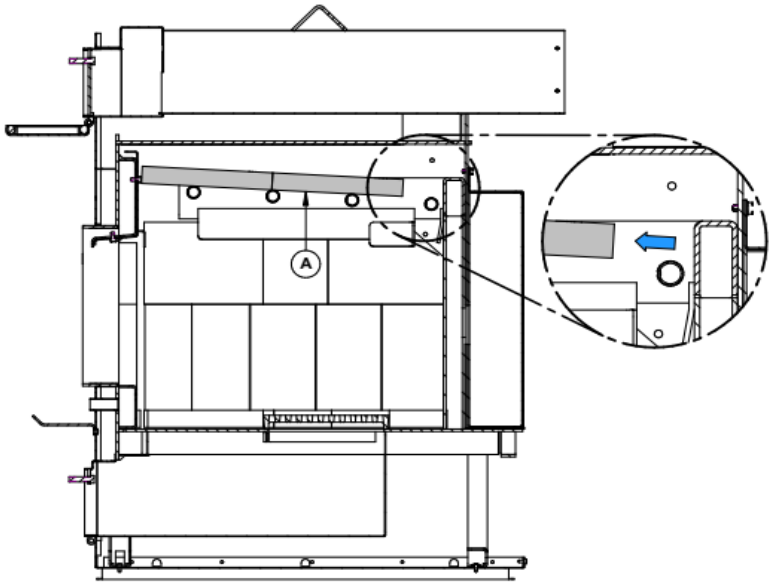

3. Use the scraper provided, clean the three exchanger tubes.

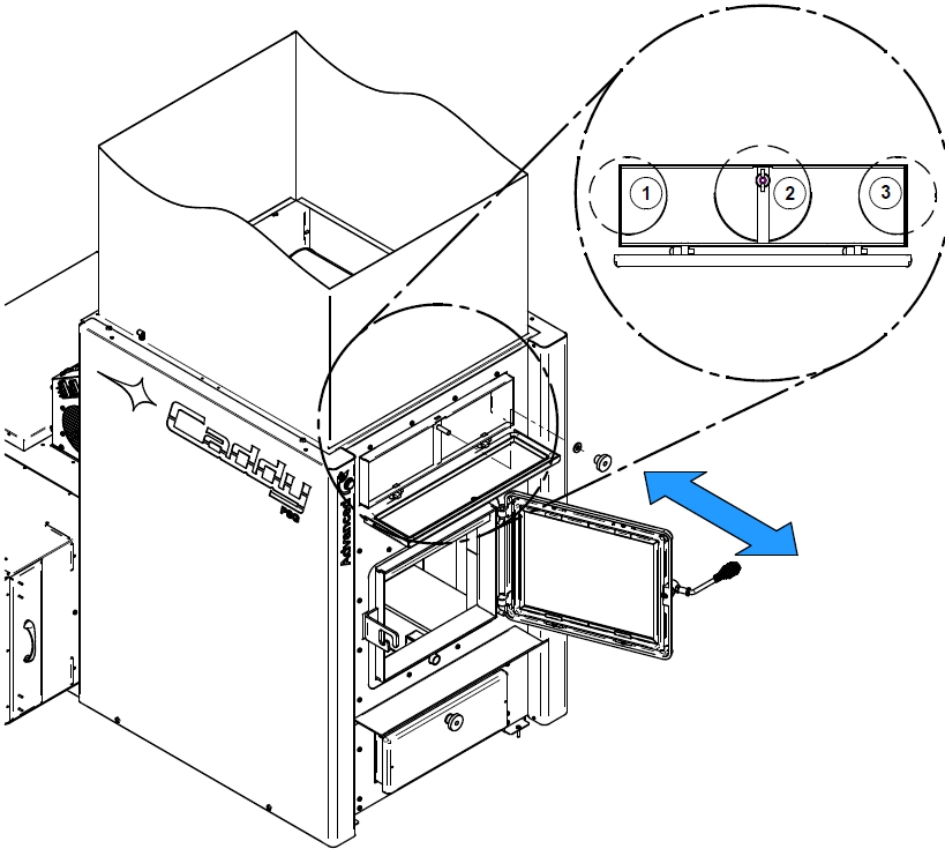

4. Dirt in the lateral exchangers **(1 and 3)** will fall into the rear of the combustion chamber.

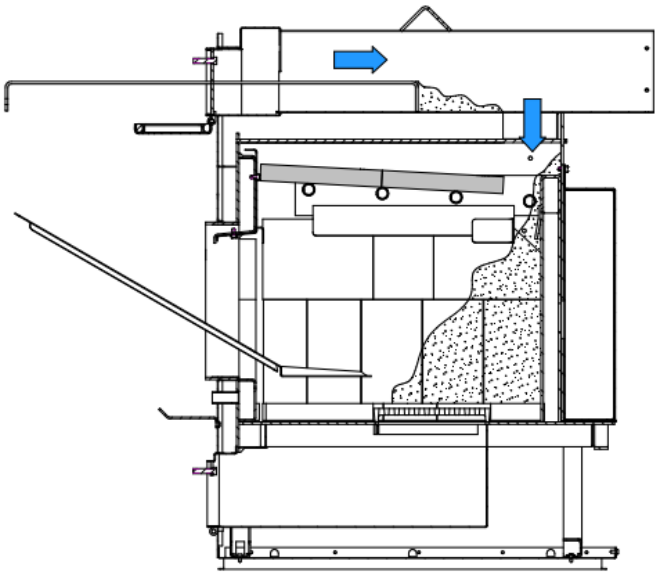

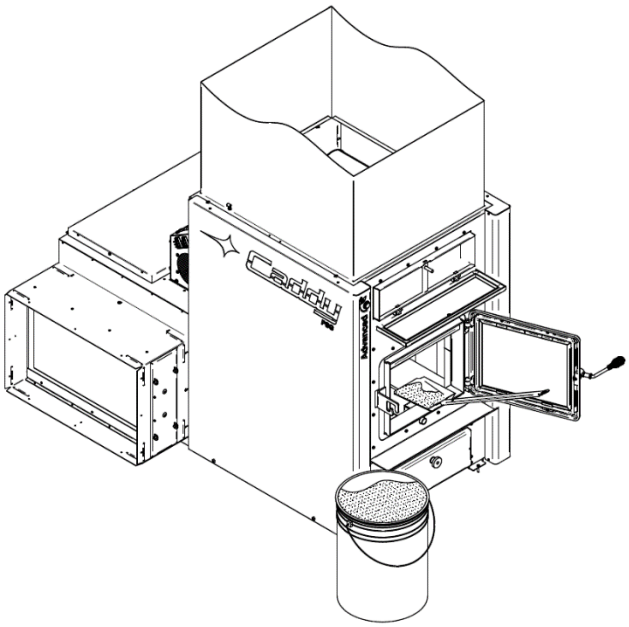

5. Dirt accumulated in the central exchanger **(2)** will be removed from the front or the rear of the furnace. If you remove dirt from the central exchange to the back of the furnace, disconnect the black pipe connector to dispose of the deposit.

6. Next, check that the baffle is clear of ashes and reposition it in its original position towards the back of the combustion chamber. **Important to note that if the baffle is not positioned correctly, the furnace will not operate efficiently.**

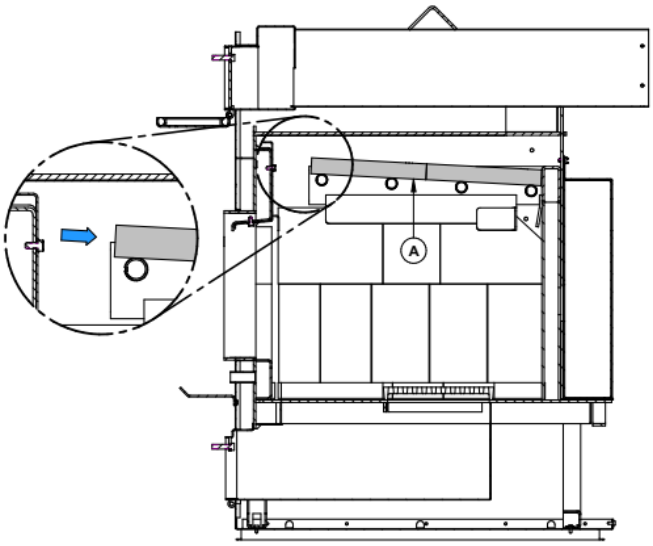

7. Finally, close the exchanger access door and secure it by putting back the washer **(C)** and wing nut **(B)**.

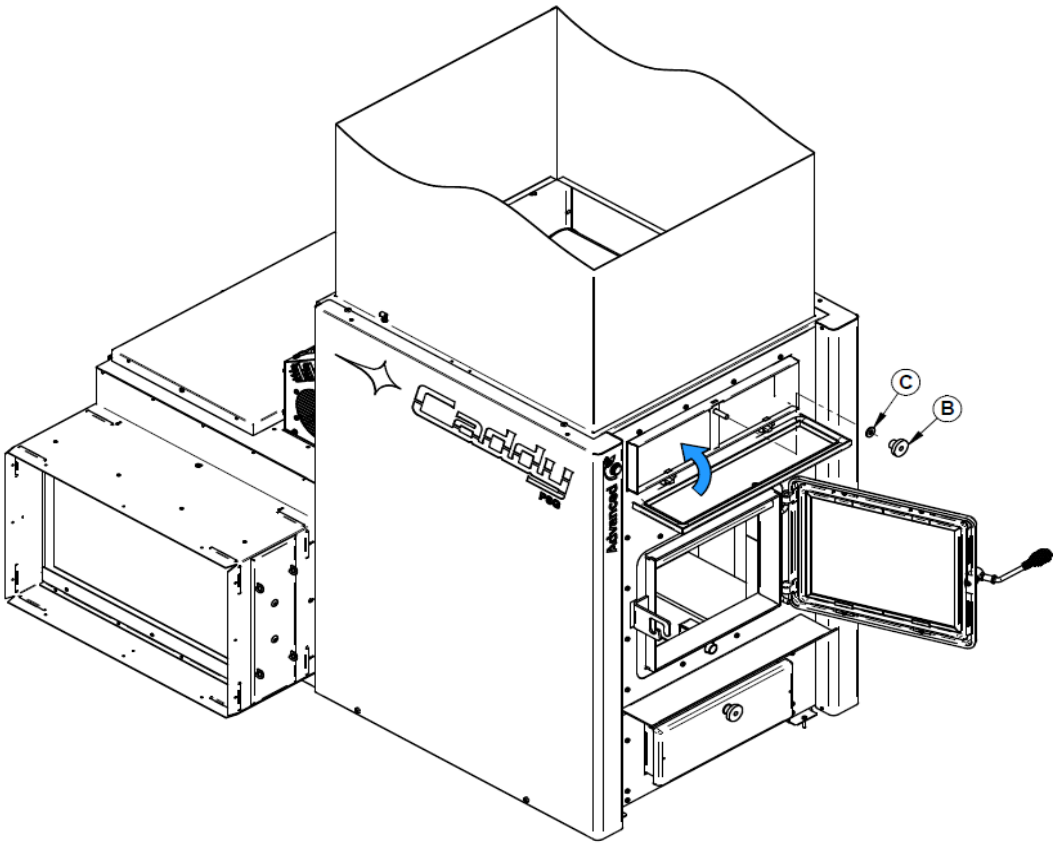

8. If you have performed the cleaning process by removing the chimney connector in the back of the furnace, be sure to reinstall the chimney connector with three screws at each connection.

20.7 THERMOCOUPLES CARE

1. Move the baffle **(A)** of the combustion chamber forward.

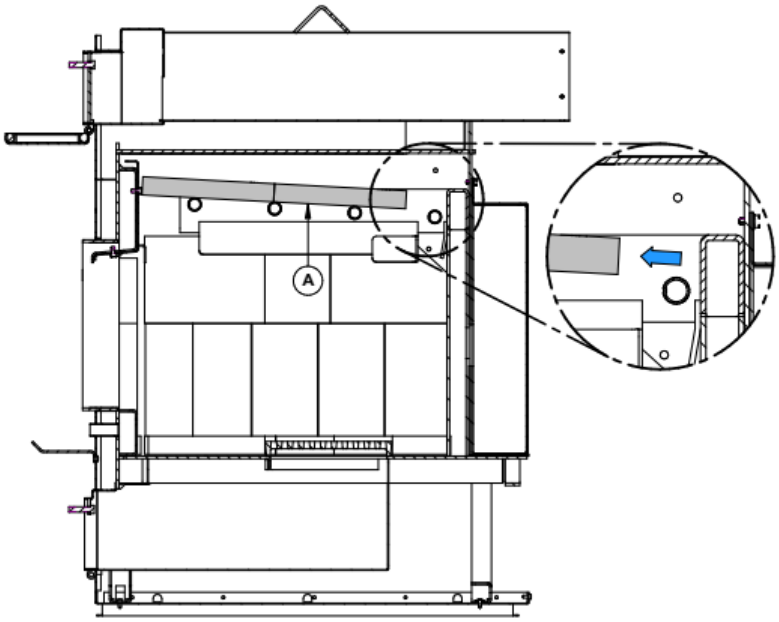

2. With a brush, carefully clean the surface of the thermocouples.

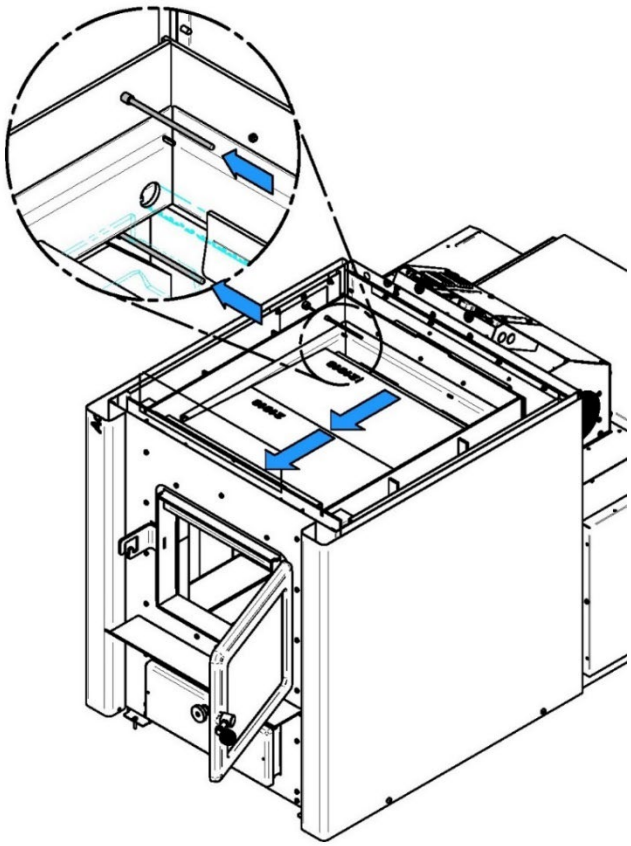

3. Then, reposition the baffle **(A)** back to its original position towards the back of the combustion chamber. **Important to note that the furnace will not burn properly if the baffle is not repositioned correctly.**

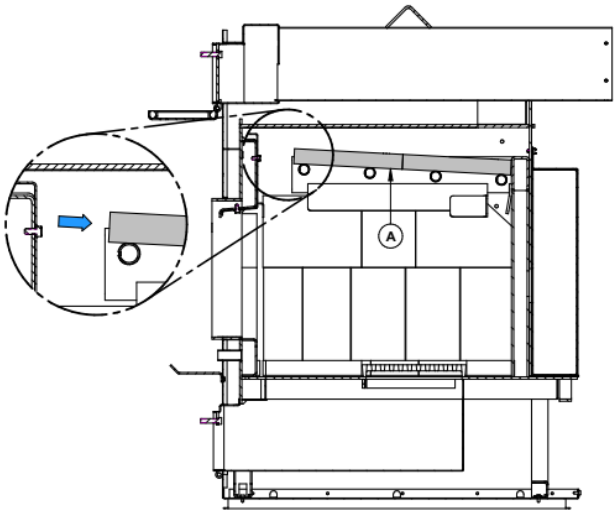

20.8 CHIMNEY MAINTENANCE

Wood smoke can condense inside the chimney connector and chimney, forming a flammable deposit called creosote. If creosote is allowed to build up in the venting system, it can ignite all the way up the chimney if the flue reaches ignition temperature Severe chimney fires can damage even the best chimneys. Smoldering, smoky fires can quickly lead to the formation of a thick layer of creosote. Use dry wood and well-oxygenated fires, so that the gases coming out of the chimney are almost transparent, and the creosote forms more slowly. By Operating your furnace correctly, you will achieve clean combustion thus reducing “creosote build-up”.

Cleaning frequency
It is not possible to predict how much or how quickly creosote will form in your chimney. It is important, therefore, to check the chimney daily or as often as possible for creosote buildup. and this until the rate of creosote formation is known. Even if creosote forms slowly in your system, the chimney must be cleaned and inspected at least once each year.

Contact your municipal or provincial fire authority for information on how to deal with a chimney fire. Have a clearly established and understood plan on how to handle a chimney fire.

Cleaning the chimney
Be sure whomever cleans the chimney understands that there is a baffle in the furnace that requires special attention in the cleaning process. Chimney sweeping can be a difficult and dangerous job. People with no chimney sweeping experience will often prefer to hire a professional chimney sweep to inspect and clean the system for the first time. After seeing the cleaning process, some will choose to do it themselves. Chimneys should be checked regularly to prevent creosote buildup.

The most common used equipment consists of fiberglass rods with threaded fittings and stiff plastic brushes. The brush is forced up and down inside the chimney flue to scrub off the creosote.

CAUTION! ***Operating your furnace without its baffle may result in unsafe and excessive temperature conditions and will void the warranty*****.**

20.9 REFRACTORY BRICK INSPECTION

Verify the refractory bricks to ensure that none are broken or damaged in any way. If so, have the damaged ones replaced.

20.10 SMOKE PIPE INSPECTION

- The smoke pipe must be inspected regularly during the heating season.
- The pipe must be examined carefully to detect any defects or damages.
- The pipe can be reassembled if no defect is detected, and defective pipe must be replaced immediately.
- **Regularly inspect flue pipes, flue pipe joints, and flue pipe seals to ensure that smoke and combustion gases are not drawn into and circulated into the home by the air-circulation system.**

20.11 BLOWER MOTOR MAINTENANCE

Periodic cleaning of the blower housing, impeller blades and louver using a vacuum cleaner provided for this purpose, is necessary to avoid compromising performance and overheating of the system.

20.12 INSTALLATION OF SECONDARY AIR TUBES AND BAFFLE

The secondary air tubes can be replaced without removing the baffle board. Moreover, the 4 tubes are identical, so, there is no need to worry about the position of each tube.

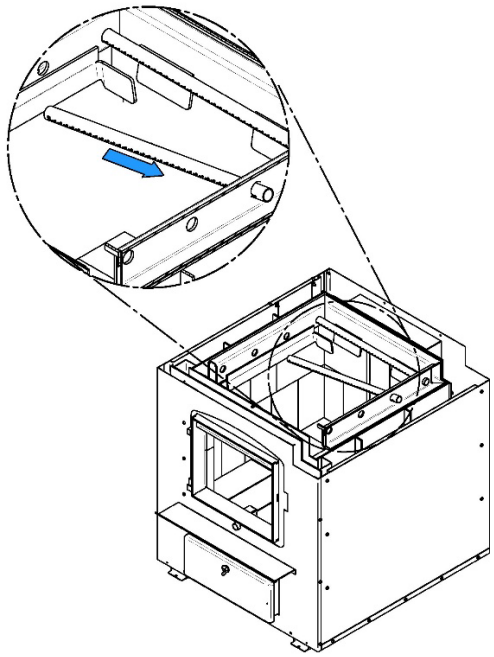

1- Starting with the rear tube, tilt and insert the right end of the secondary air tube into the rear right channel hole. Then lift and insert the left end of the tube into the rear left channel.

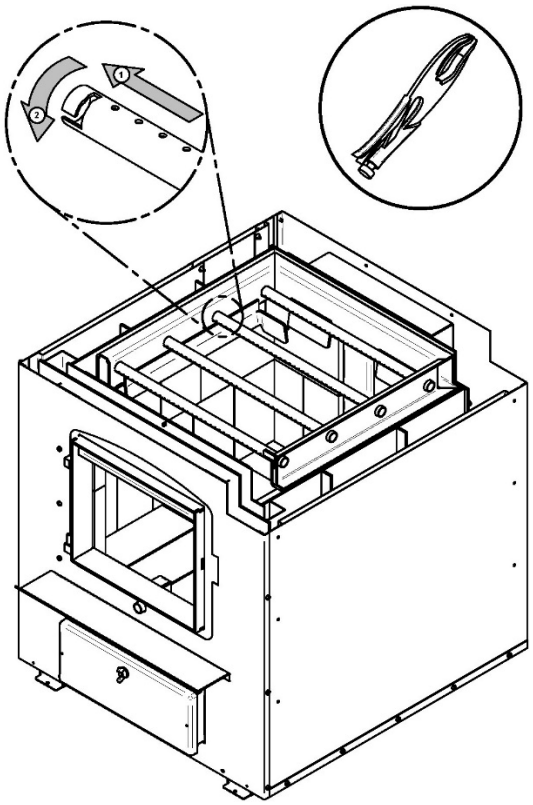

2- Align the notch in the left end of the tube with the keyhole of the left air channel. Using a “vise-grip” pair of pliers hold the tube and lock it into place by turning the tube as shown. Make sure the notch reaches the end of the keyway.

3- Repeat **step 1** & **2** for the other secondary air tubes.

4- To remove the tubes, use the above steps in reverse order.

21 1in FILTER ADAPTER

Your fan's filter support **(PA08581 and PA08582)** can be adapted to accept 1" filters instead of 2" filters. Following is the procedure.

.

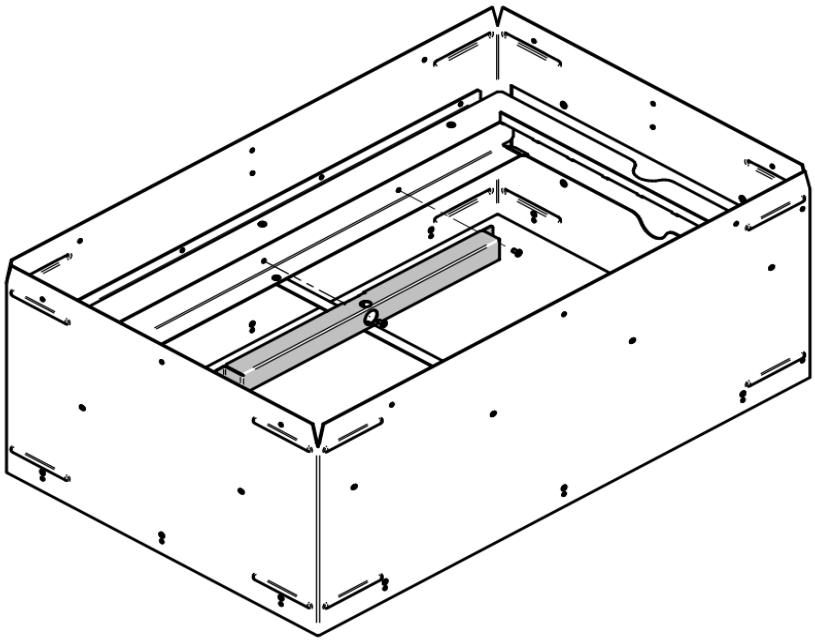

Remove the filter brackets (2X) from the furnace’s manual kit.

- Screw them in using 3 screws on each side of the filter support.

22 TROUBLESHOOTING

In the event of a technical problem, the first thing you can do is a self-diagnostic test to speed up the process with the technical support department.

SELF-DIAGNOSTIC PROCESS	
1.	Press the LED button and maintain pressure until the LED lights up. • The light should be solid green (does not blink)
2.	The self-diagnostic process will engage with the following results for the LED button: • Blink 1x: Top Thermocouple (Baffle) is problematic. • Blink 2x: Bottom Thermocouple (Combustion chamber) is problematic. • Blink 4x: RTD is problematic. • Blink 8x: Electronic board is problematic. • Does not blink: No problem
3.	Press the LED button, the air intake motors test will begin: • Blink 1x: Primary motor is problematic. • Blink 2x: Grill motor is problematic
4.	Press the LED button, the air distribution blower test begins (all the blower speeds will be automatically tested) • Listen to the blower speed
5.	Press the LED button to end the self diagnostic test.

When you have issues with your furnace, your first reaction may be to call technical support. This section will help you save time and money by enabling you to solve simple problems by yourself. The most **common problems are generally caused by the following five factors**:

- Wrong operation or lack of maintenance
- Bad installation
- Poor quality combustible
- Component failure
- Factory defect

If you need to contact your dealer of technical support, make sure to have the model of your appliance and the serial number on hand. This will speed up the process with the technical support (they can be found on the certification label on the sides of the furnace.

WARNING! RISK OF ELECTRIC SHOCK. IF YOU NEED TO MANUALY TEST, HANDLE OR REPLACE A COMPONENT, THE FURNACE MUST BE DISCONNECTED FROM ITS POWER SUPPLY.

PROBLEM	CAUSES	SOLUTIONS
Does not heat well during the initial combustions. Lack of draft.	If installed, improper adjustment of the barometric damper (opened too wide). Chimney flue restriction (too long. 90° elbows).	▪ Adjust the barometric damper. ▪ Minimize the smoke pipe length to the chimney and use 45° elbows
Furnace burns well, warm air plenum is very hot but there is little heat coming out into the rooms.	Incorrect configuration of distribution or return lines, low static pressure, unbalanced system (too many warm air outlets and not enough fresh air return).	▪ Reconfigure distribution and return lines to respect the minimum static pressure of 0.20 in. W.C. (50 Pa) in the plenum
Furnace consumes a lot of wood.	The thermostat always calls for heat or is too close to a source of cold air or there is little heat where it is located. Air controls not properly adjusted. Home insulated poorly. Furnace door or ash drawer door not airtight. Furnace too small for the surface	▪ Relocate the thermostat. ▪ Rebalance the ventilation system to increase the air flow in the room where the thermostat is located. ▪ Check air intake controls, furnace door and ash drawer door for leaks.

	to be heated. Unbalanced ventilation system.	
High creosote content, moderate heat output.	Wet wood, lack of draft. Barometric damper not properly adjusted. Restriction in the furnace or chimney.	▪ Use dry wood. ▪ Adjust the barometric damper. ▪ Clean the chimney, flue pipe and furnace heat exchangers
Furnace heats a lot, but the warm air plenum remains lukewarm.	Damp or poor-quality wood. Fresh air return too great for warm air ducts. Unbalanced ventilation system. No static pressure.	▪ Use dry wood. ▪ Reconfigure the ventilation system
Reload button LED blinking fast.	Unit is overheating	▪ Leave the door closed, do not add more wood and wait for the end of combustion. ▪ Check furnace and ash drawer doors as well as air intake controls for leaks. ▪ Excessive chimney draft.
Primary air intake controls always remain closed	Furnace is not plugged-in, or an electrical component is defective.	▪ Make sure the furnace is plugged-into a working outlet. ▪ Test and replace, if necessary, control switch, thermostat, or air intake control motors.

23 OPTIONAL ACCESSORIES

The following accessories can be paired with the CADDY ADVANCED CR furnace.

#	DESCRIPTION
PA01106	ELECTRIC HEATING ELEMENTS 10-20 kW
PA03060	CONTROL UNIT AND OPTIONAL ADD-ON MODULES
PA08555	ANGLED SUPPORT DUCT
PA08581	PSC AIR BLOWER FAN
PA08582	ECM AIR BLOWER FAN
PA08587	LATERAL EXTENSION FOR BLOWER FAN
PA08588	TOP AIR RETURN PLENUM
PA08589	SIDE EXTENSION FOR ANGLED SUPPORT
PA08591	HEAT PUMP HARNESS
PA08592	CONNECTION PLATE FOR THE DETTSON GAS FURNACE
PA08593	CONNECTION PLATE FOR THE NAPOLEON / CONTINENTAL GAS FURNACE

24 EXPLODED DIAGRAM AND PARTS LIST

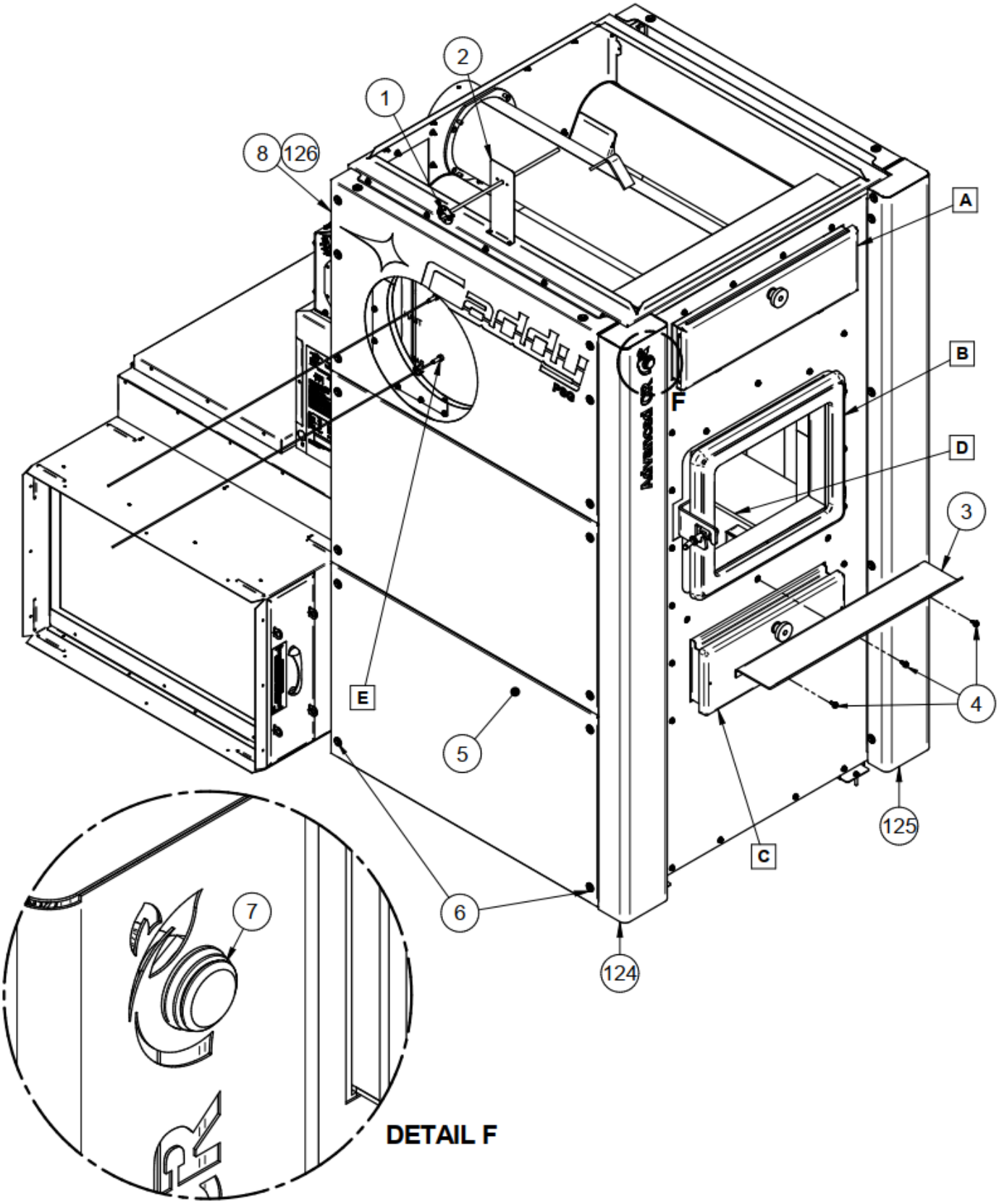

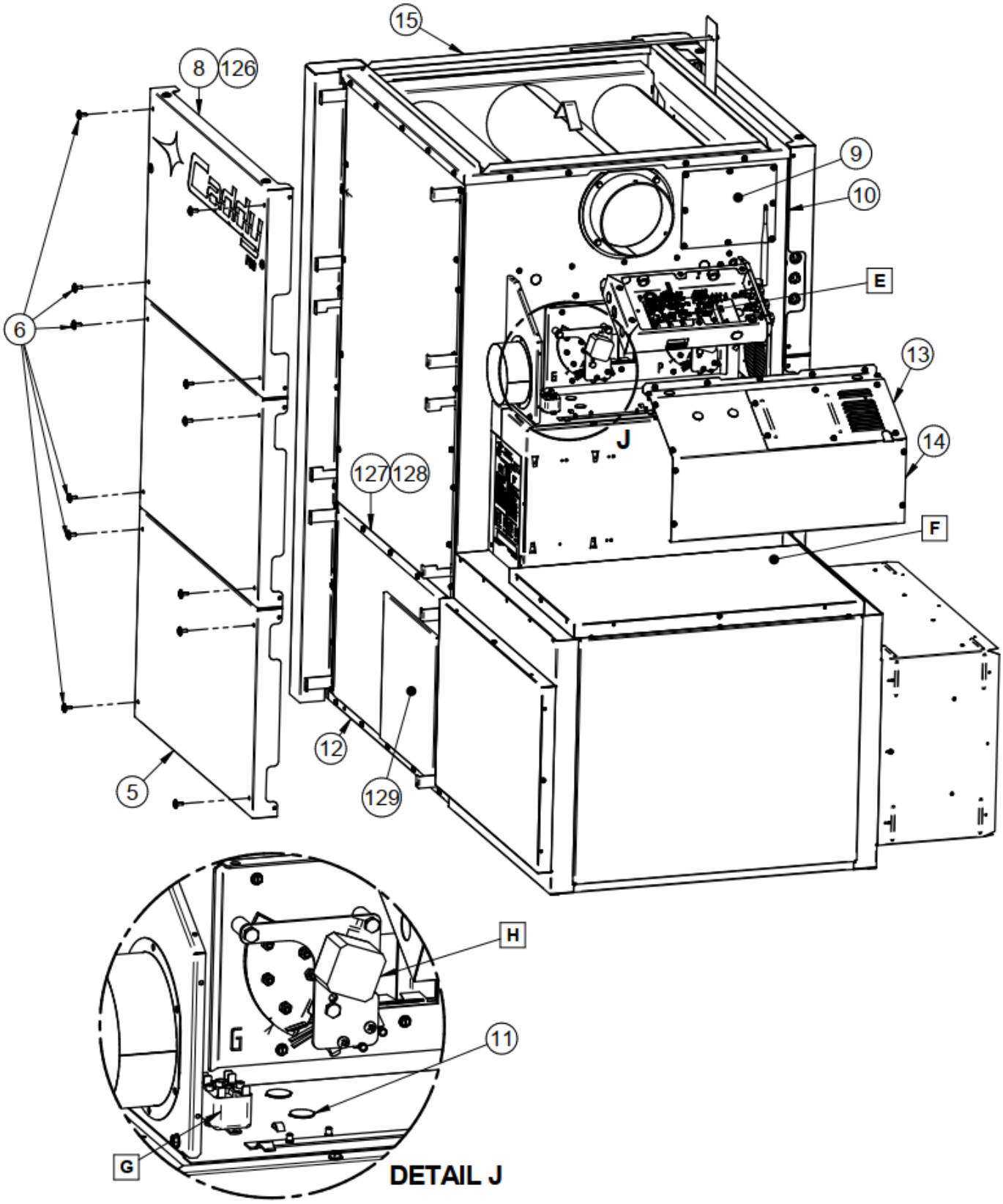
15
8
126
9
10
E
6
13
14
J
127
128
F
12
5
129
H
11
G
DETAIL J

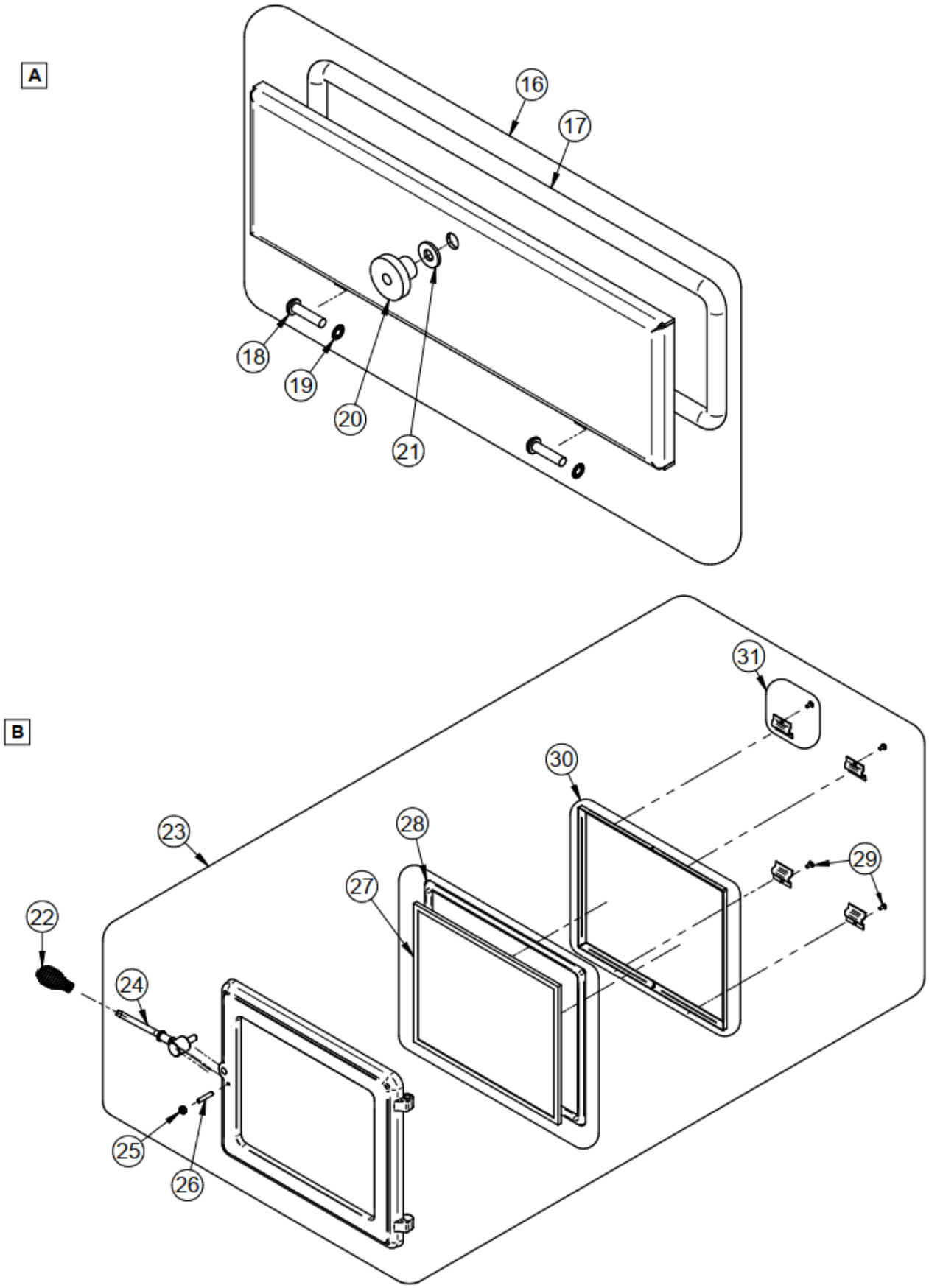
A
16
17
18
19
20
21
B
22
23
24
25
26
27
28
29
30
31

C

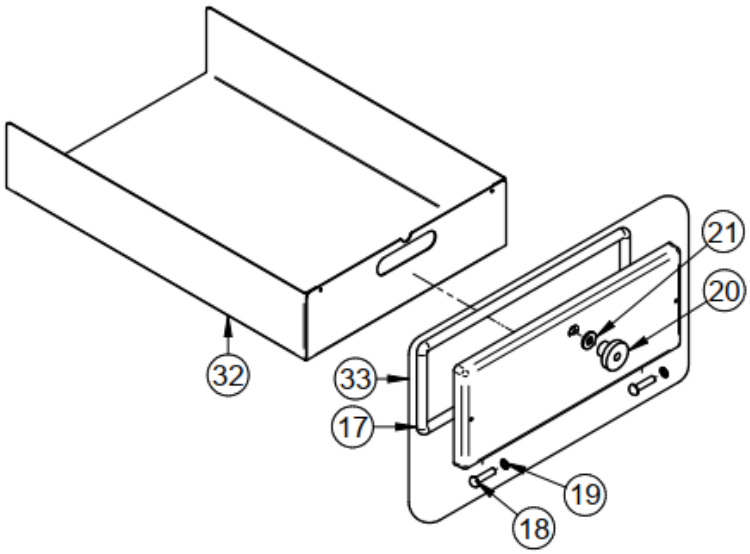

D

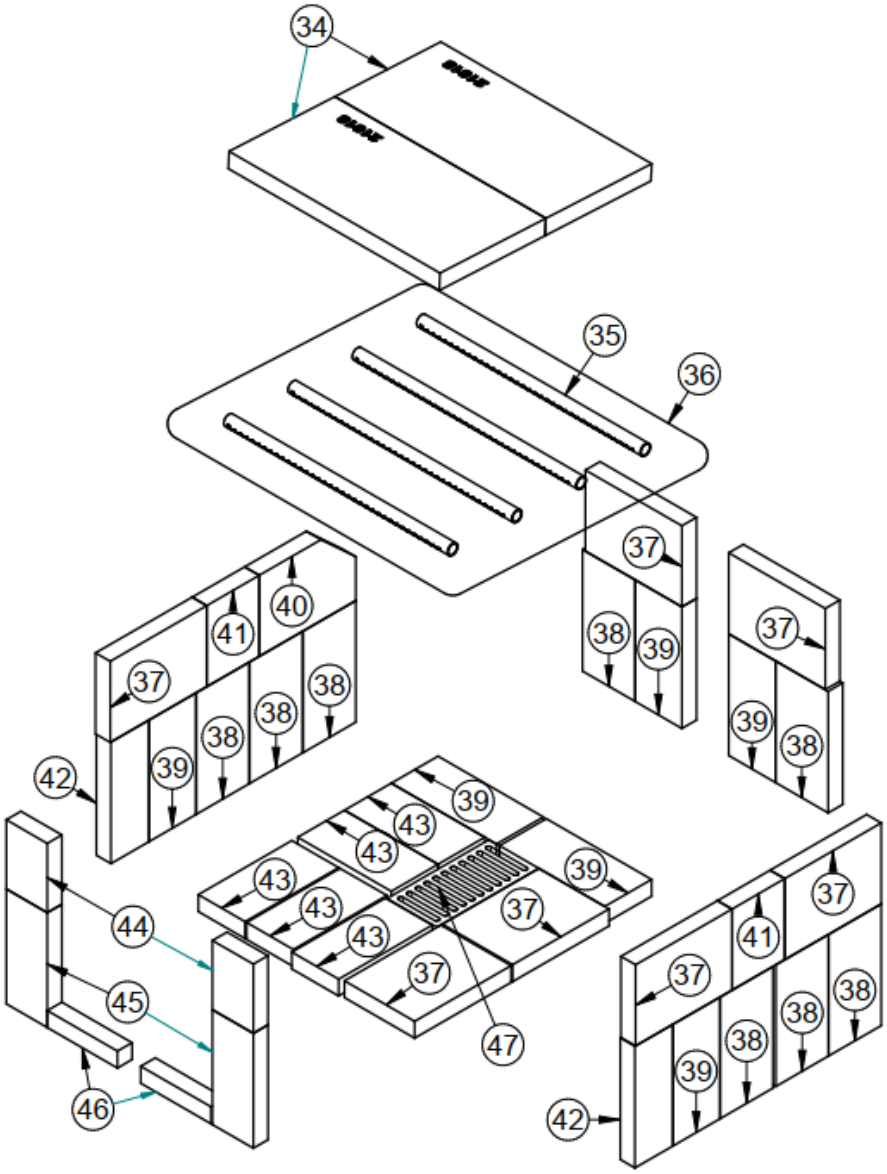

E

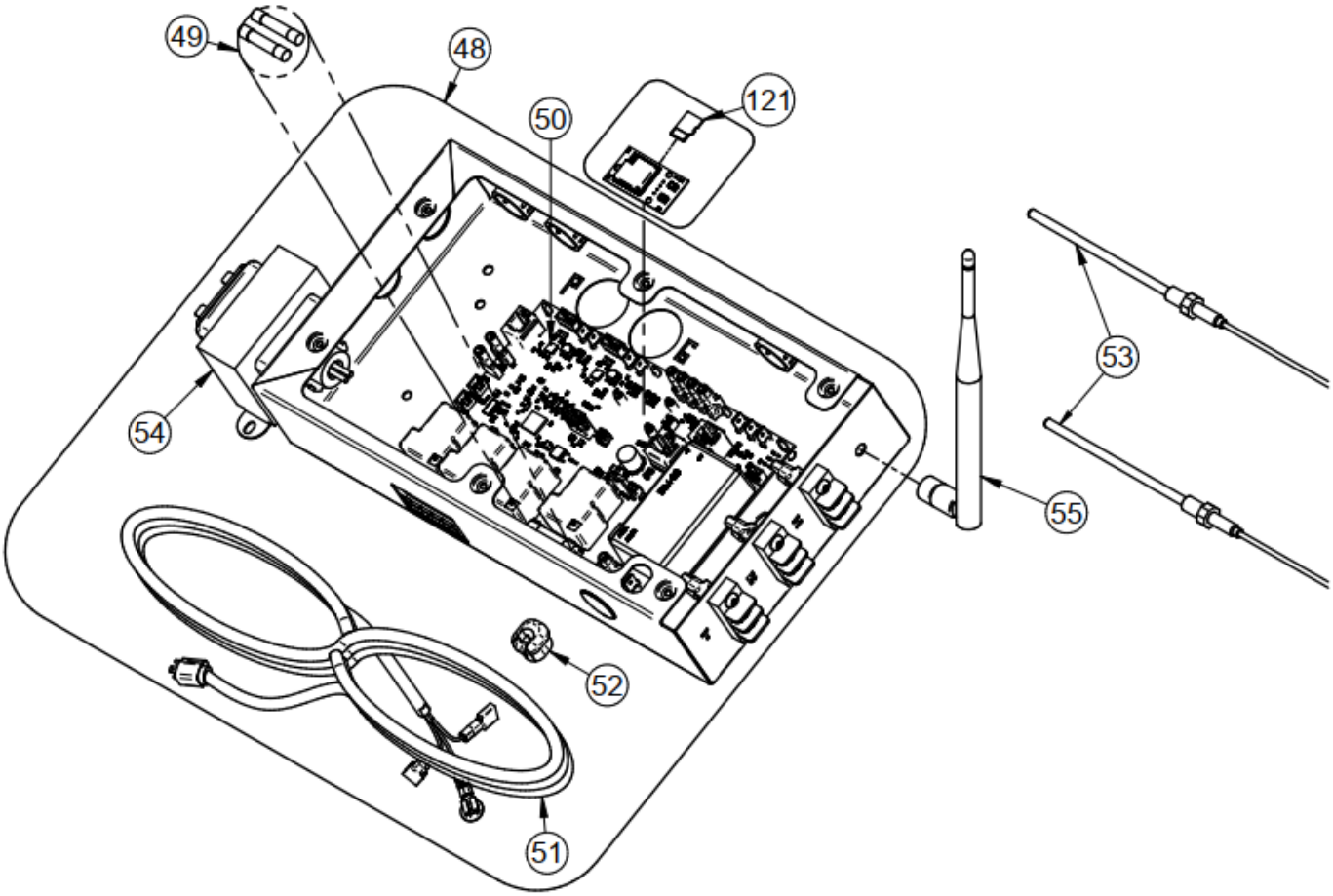

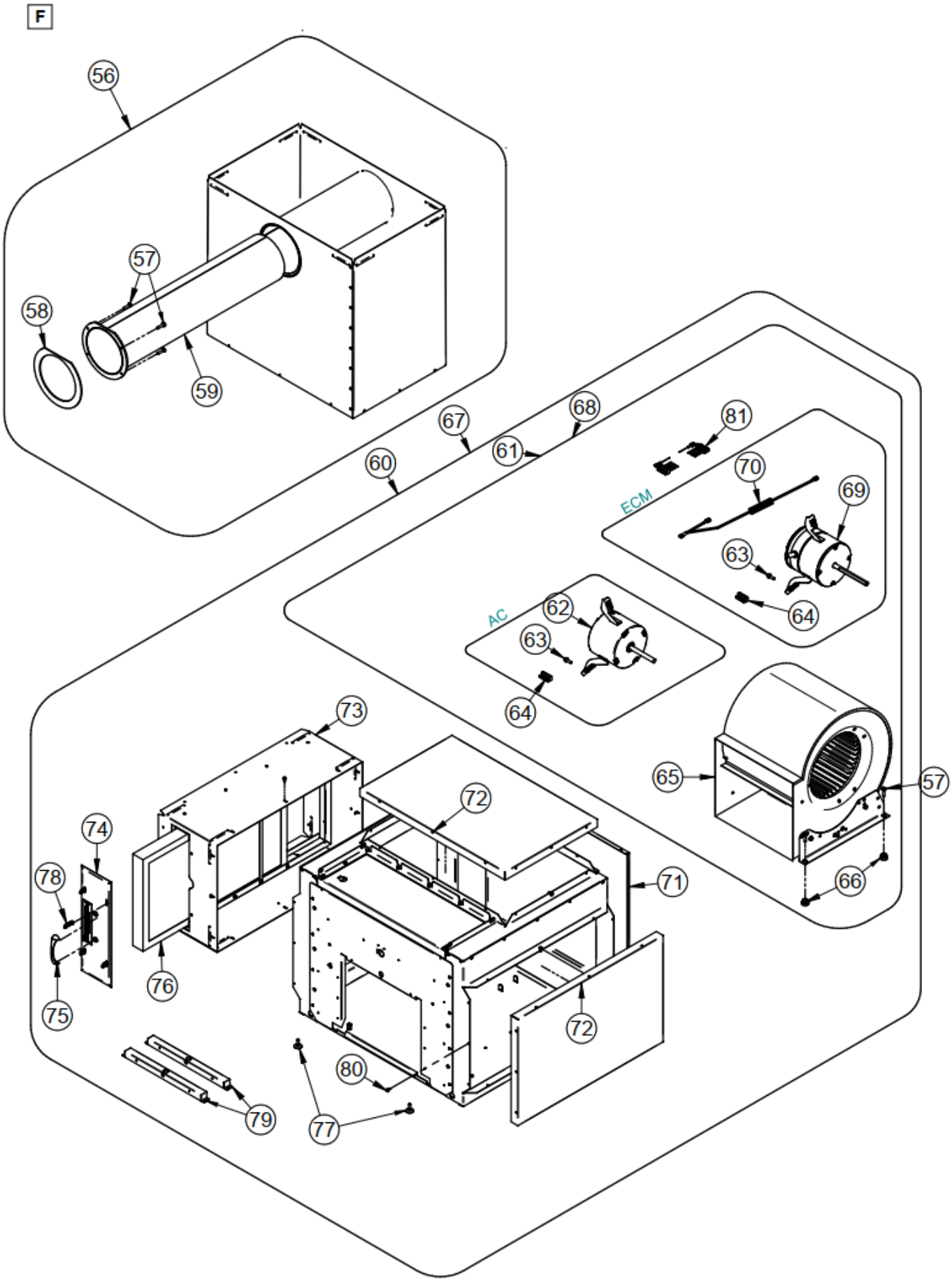
F
56
57
58
59
60
61
67
68
81
70
69
ECM
63
64
AC
62
63
64
73
65
57
72
74
78
71
66
76
75
72
80
79
77

G

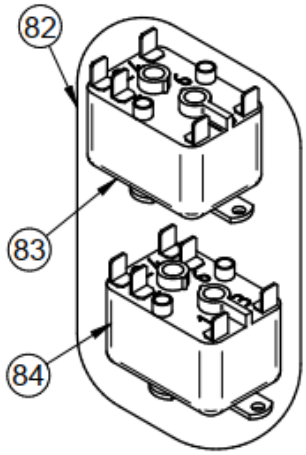

H

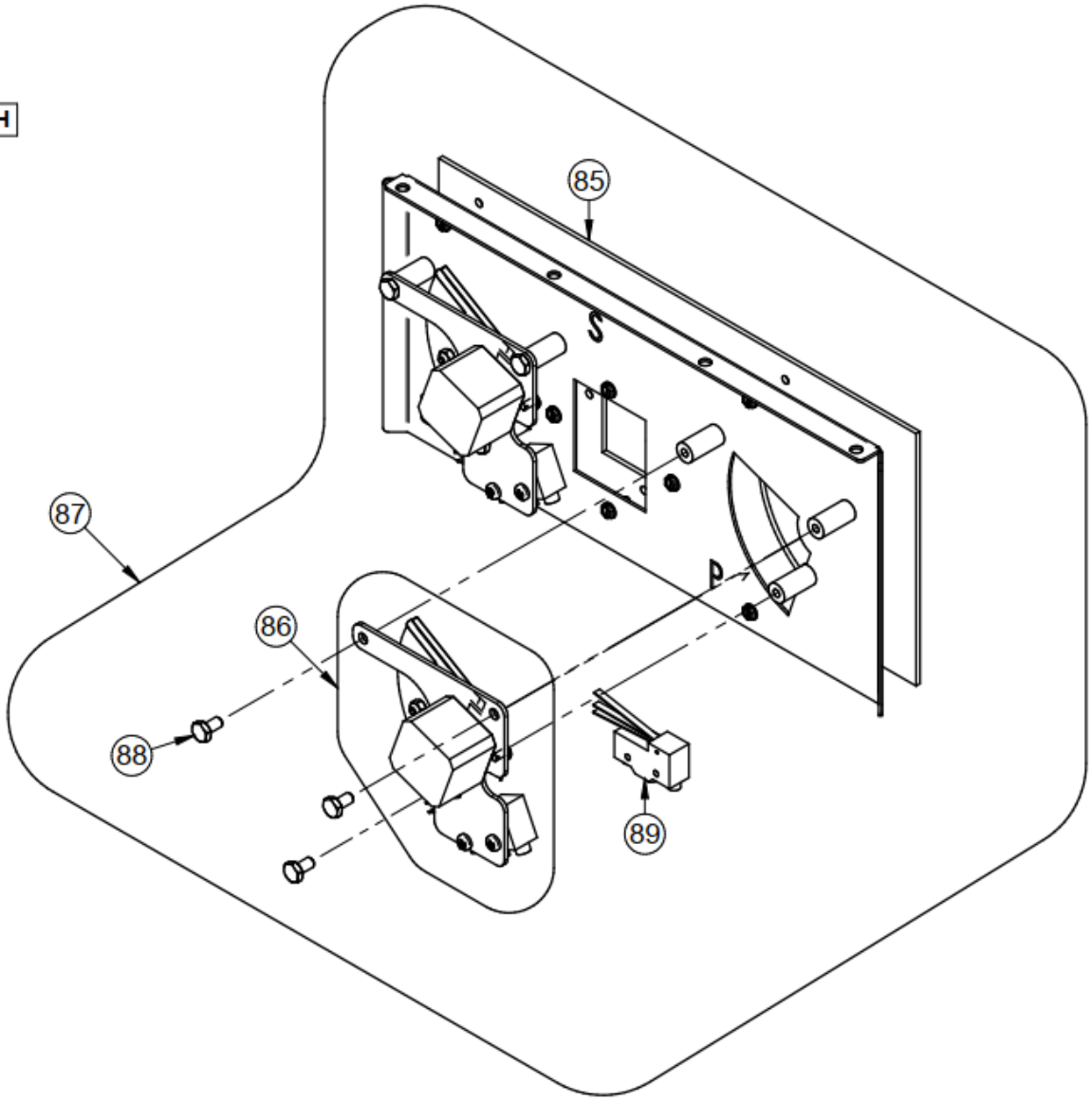

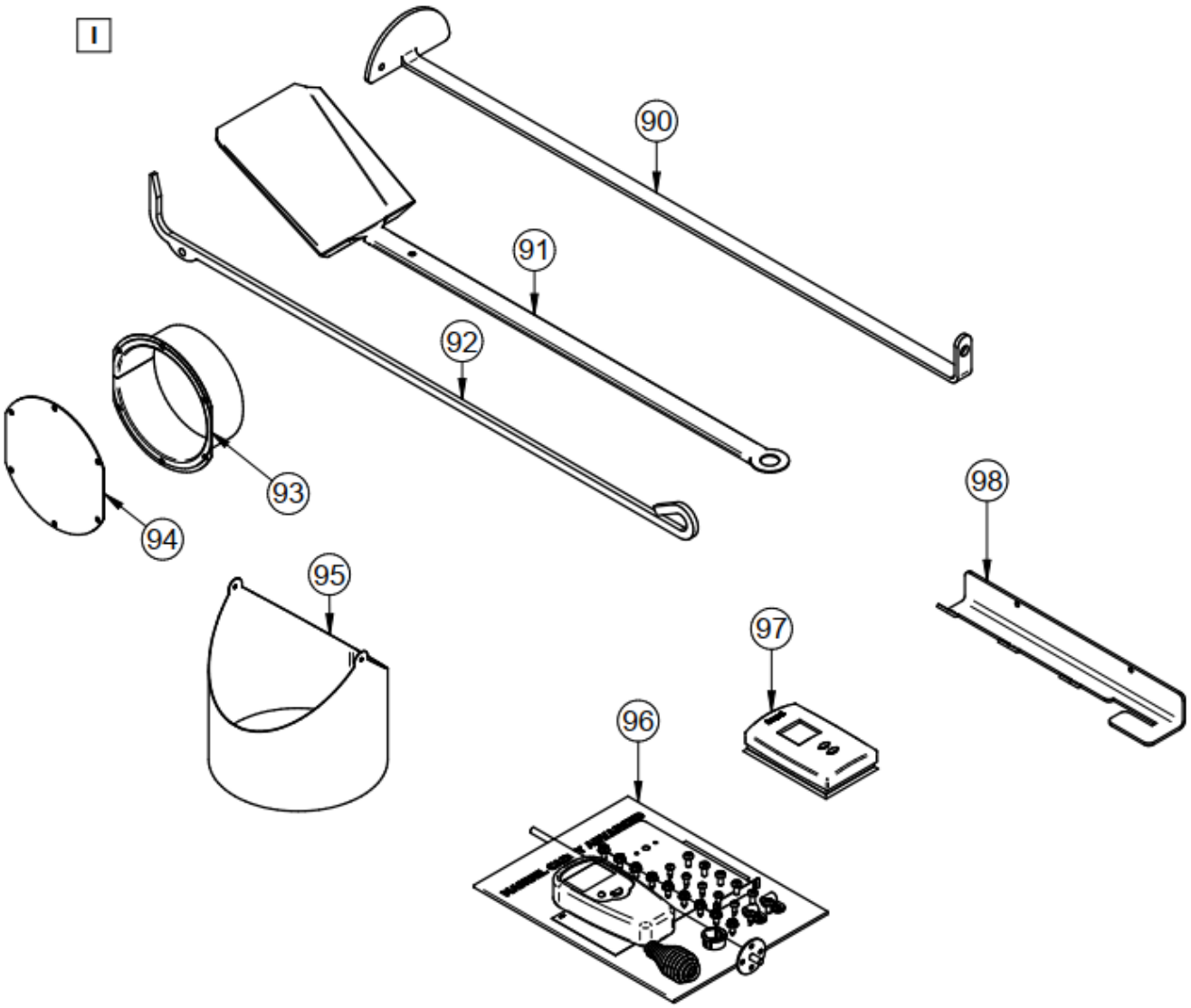
I
90
91
92
93
94
95
96
97
98

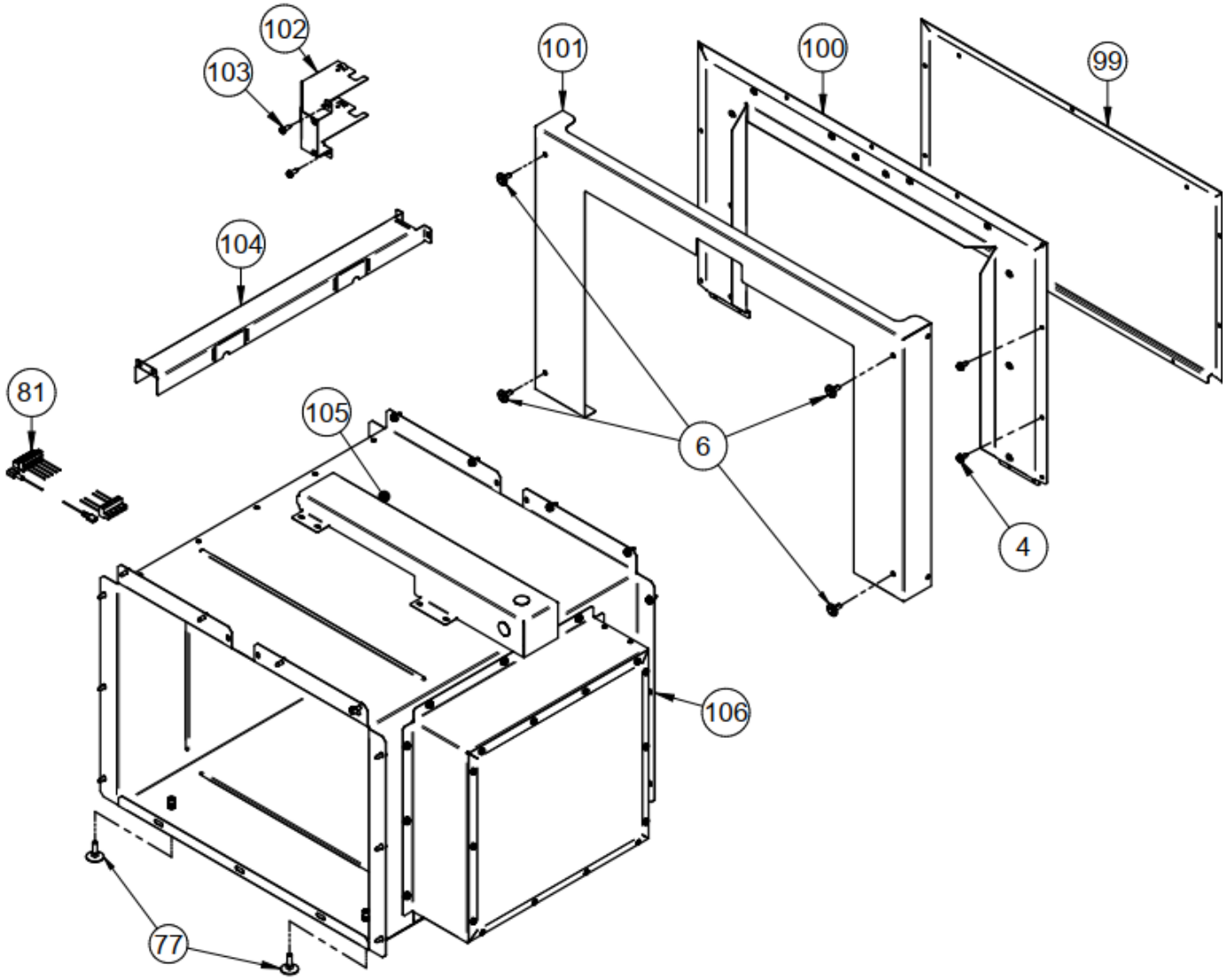
102
103
101
100
99
104
81
105
6
4
106
77

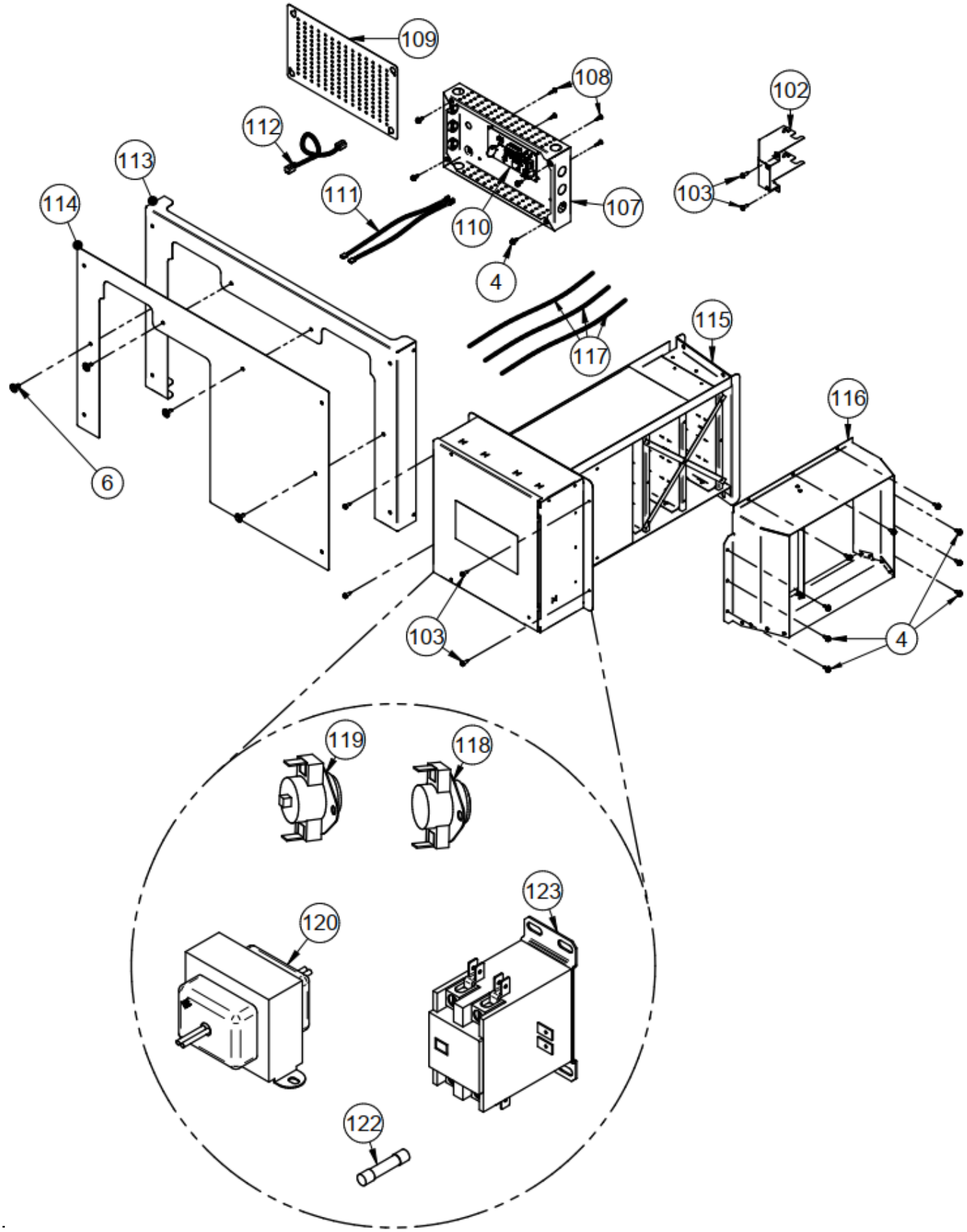
109
108
102
112
113
111
114
110
107
103
4
117
115
116
6
103
4
119
118
123
120
122

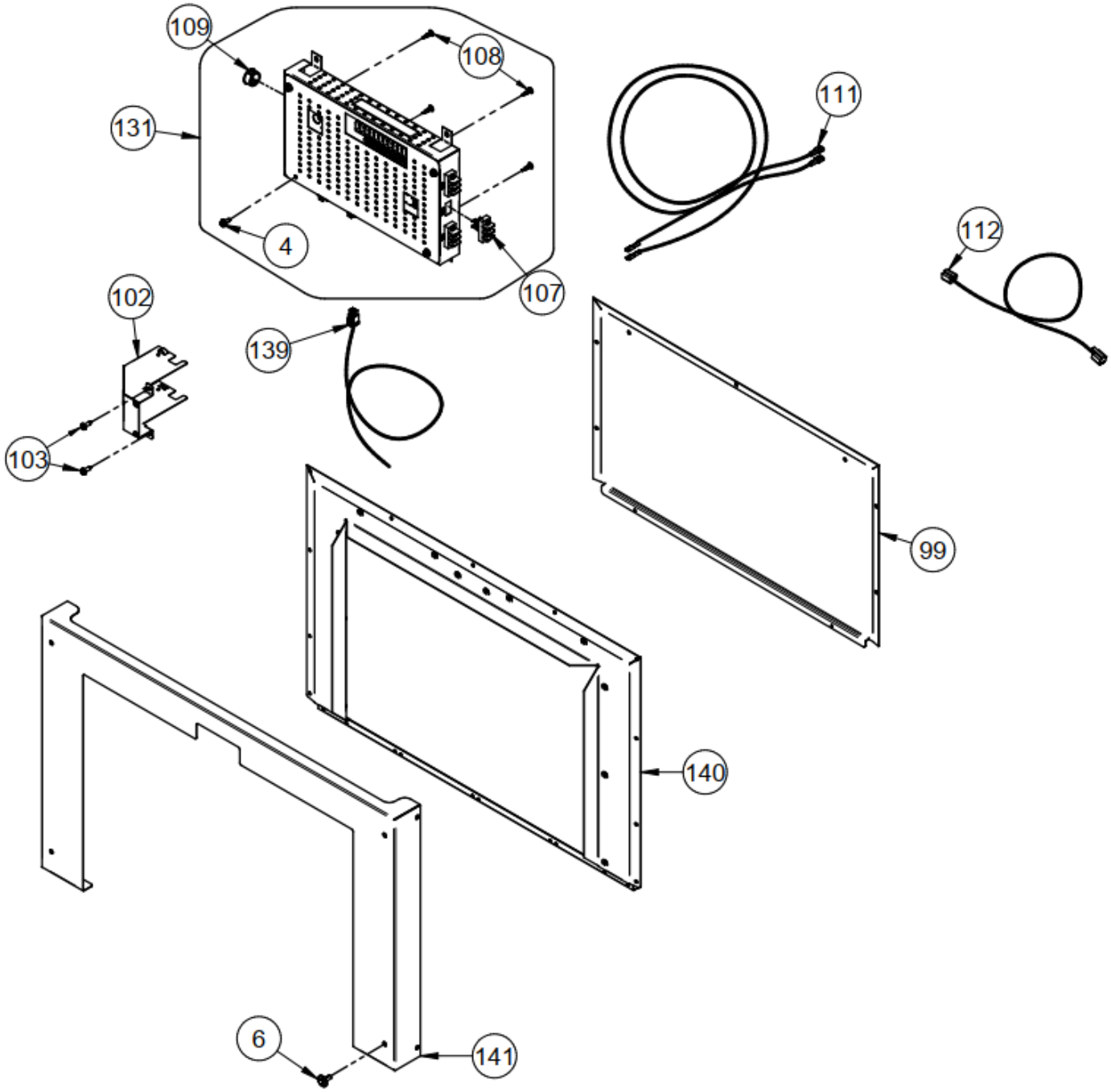
109
108
131
111
4
107
112
102
139
103
99
140
6
141

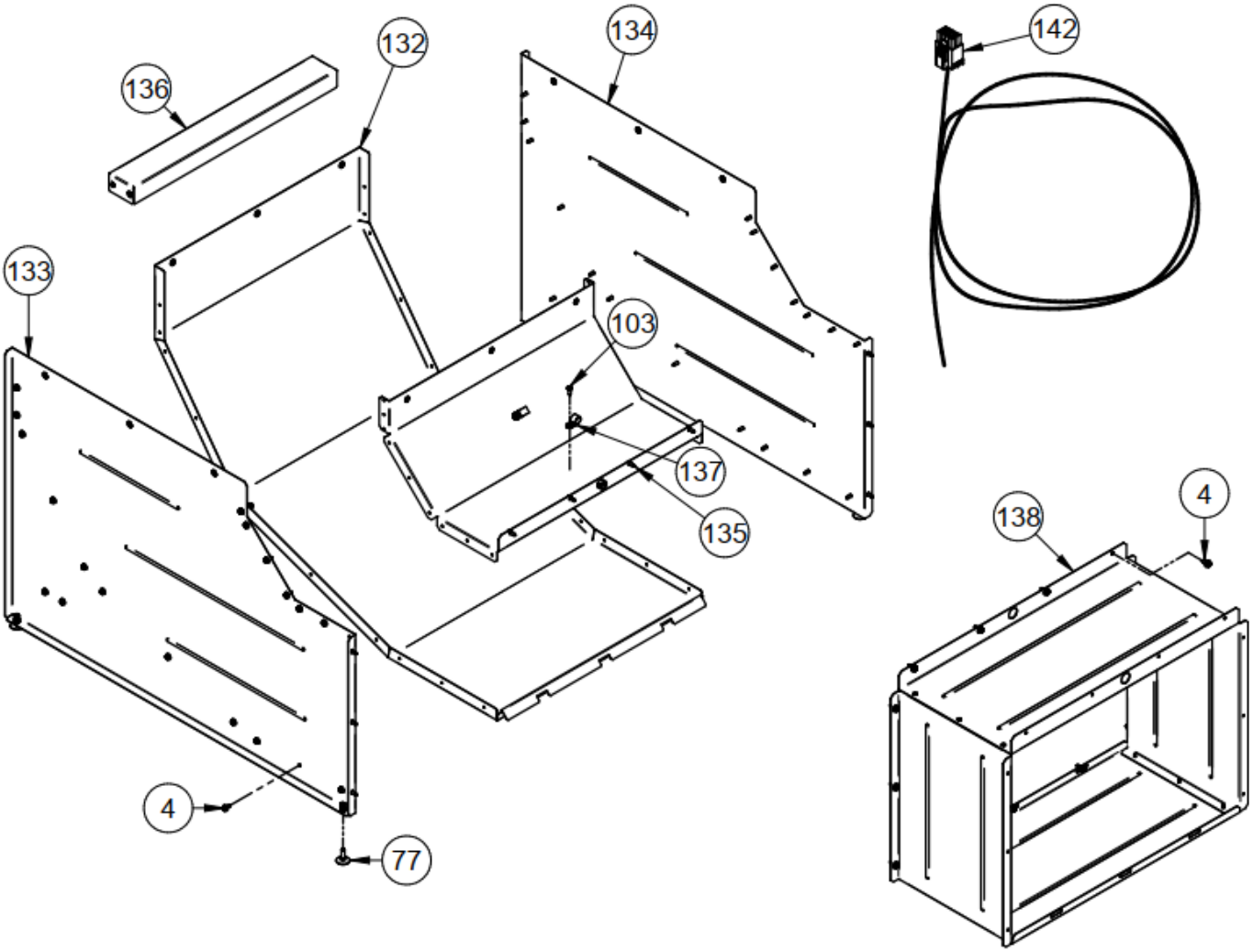
136
132
134
142
133
103
137
135
138
4
4
77

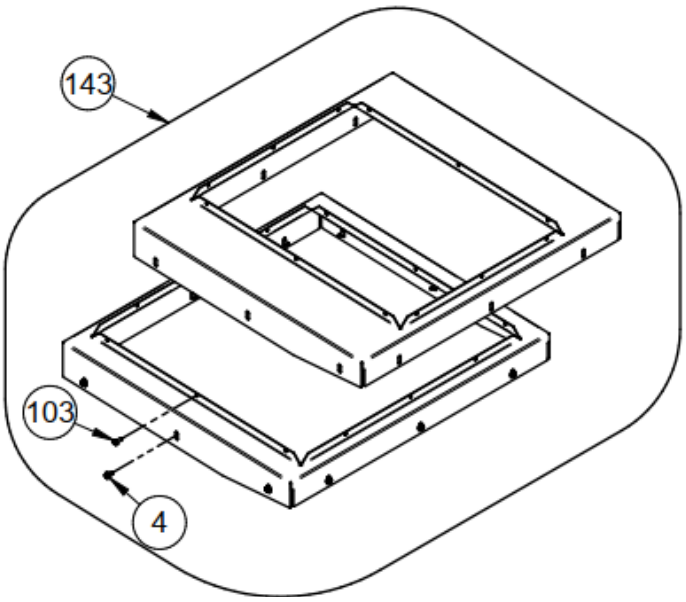
143
103
4

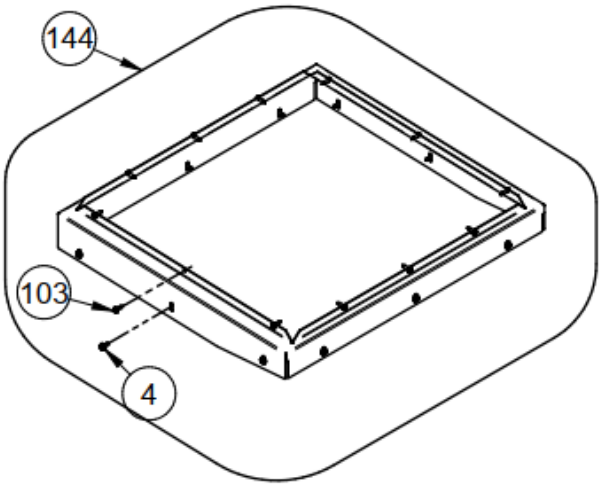
144
103
4

IMPORTANT: THIS IS UP TO DATE INFORMATION. When requesting service or replacement parts for your furnace, please provide the model and the serial number. We reserve the right to change parts due to technological upgrades or availability. Contact an authorized dealer to obtain any of these parts. Never use substitute materials. Use of non-approved parts can result in poor performance and safety hazards.

#	PART	DESCRIPTION	Qty
1	44096	100 OHM RTD PROBE 38" WIRE	1
2	PL48258	RTD SUPPORT BRACKET	1
3	PL56276	ASH SHELF	1
4	31048	SCREW #10 X 1/2 HWH PH TYPE AB ZINC PLATED/BLACK PAINT	10
5	PL66296	DECORATIVE PANEL	1
6	31366	PUSH IN RIVET	4
7	44241	SWITCH PUSH SPST-NO 10A 14V	1
8	PL66297	CADDY DECORATIVE PANEL	1
9	PL66211	THERMOCOUPLE ACCESS PANEL	1
10	PL66278	FURNACE'S BACK	1
11	SE66231	ASSEMBLED AIR INTAKE SUPPORT	1
12	SE66160	AIR JACKET FLOOR ASSEMBLY	1
13	PL66239	ACCESS PANEL ELECTRONIC BOARD	1
14	PL66238	MOTOR CASING	1
15	PL66287	JACKET TOP	1
16	SE66176	HEAT EXCHANGER ACCESS DOOR	1
17	AC06900	BLACK ROUND GASKET 1/2'' X 9' WITH ADHESIVE KIT	2
18	30168	HINGE PIN 5/16"Ø X 1 1/4"L	4
19	30055	HINGE PIN RETAINING RING 5/16" ID X 0.512" OD	4
20	30799	STEEL ROUND KNOB, 3/8"-16 THREADED	2
21	30210	WASHER 29/32" OD X 3/8" ID ZINC	2
22	AC07869	3/8" BLACK COIL HANDLE	1
23	SE51354	CAST IRON DOOR WITH HANDLE	1
24	AC09151	REPLACEMENT HANDLE KIT	1
25	30100	BLACK HEX NUT 1/4 - 20 (NON-OILED)	1
26	30128	1/4"-20 X 1 1/4" SOCKET SET SCREW	1
27	SE51352	13 1/8"W X 10 7/8"H GLASS WITH GASKET	1
28	AC06725	GLUE AND 3/4" X 7' WHITE DOOR GASKET KIT	1
29	30124	MECHANICAL SCREW #8-32 X5/16" TRUSS QUADREX #2 ZINC	4
30	SE51349	GLASS RETAINER KIT	1
31	SE51351	GLASS RETAINER FIXING KIT FOR FRAME	1
32	PL66175	ASH DRAWER	1
33	SE48054	HEAT EXCHANGER ACCESS DOOR	1
34	21618	C-CAST FIREWALL - 9.062" X 13.031" X 1.250"	2
35	PL66163	SECONDARY AIR TUBE	4
36	SE66163	SECONDARY AIR TUBES KIT	1
37	29005	6" X 8 1/4" X 1 1/4'' REFRACTORY BRICK HD	7
38	29020	4 1/2'' X 9'' X 1 1/4'' REFRACTORY BRICK HD	8
39	29011	4'' X 9" X 1 1/4" REFRACTORY BRICK HD (AC-SB)	6

#	PART	DESCRIPTION	Qty
40	PL66192	6'' X 8 1/4'' X 3 1/4'' X 5 17/64'' HD REFRACTORY BRICK	1
41	PL66190	HD 4 1/2'' X 6'' X 1 1/4'' REFRACTORY BRICK	2
42	PL36102	3 1/4" X 9'' REFRACTORY BRICK	2
43	29001	4'' X 8'' X 1 1/4'' REFRATORY BRICK HD	5
44	PL36116	3 1/2" X 5 1/8'' X 1 1/4'' REFRACTORY BRICK	2
45	PL36266	3 1/2" X 8 1/2" X 1 1/4" REFRACTORY BRICK	2
46	PL66191	1 1/4'' X 6'' X 1 1/4'' HD REFRACTORY BRICK	2
47	24089	CAST IRON ASH GRATE 4 1/2" X 9"	1
48	SE66336	CONTROL BOARD ASSEMBLY	1
49	SE44137	CADDY ADVANCED FUSES KIT	1
50	SE44265	ASSEMBLED ELECTRONIC BOARD	1
51	60013	POWER CORD 96" X 18-3 type SJT (50 pcs per carton)	1
52	60008	BLACK NYLON BUSHING	1
53	60413	TYPE K UNGROUNDED THERMOCOUPLE	2
54	SE60368	TRANSFORMER KIT	1
55	SE44309	ANTENNA KIT	1
56	PA08506	TOP AIR RETURN PLENUM KIT	1
57	30109	BOLT HEX 1/4 - 20 X 1"	1
58	21221	CHIMNEY ADAPTER GASKET	1
59	SE66267	ASSEMBLED EXHAUST PIPE	1
60	PA08581	BLOWER BOX WITH REGULAR MOTOR	1
61	SE48245	G10 BLOWER ASSEMBLY WITH 1/3HP MOTOR (115V/5A/575W)	1
62	51003	1/3 HP 4 SPEED MOTOR FOR G-10 DD	1
63	30094	HEX SCREW WASHER HEAD 1/4-20 X 3/4" F ZINC TYPE	1
64	44186	5 POSITIONS TERMINAL BLOCK	2
65	51011	BLOWER HOUSING G-10 DD	1
64	30335	BLOWER ANTIVIBRATION CUSHION	4
67	PA08582	BLOWER BOX WITH ECM MOTOR	1
68	SE66251	G10 BLOWER ASSEMBLY WITH 1/3HP ECM MOTOR (115V/5A/575W)	1
69	51055	1/2 HP NANFENG ECM MOTOR	1
70	60436	WIRE WITH FUSE 10A ECM MOTOR	1
71	PL66230	BLOWER ACCESS PANEL	1
72	PL48215	BLOWER BOX SIDE PANEL	2
73	SE66341	DUCT SUPPORT ASSEMBLY	1
74	SE66346	FILTER COVER ASSEMBLY	1
75	SE28062	HANDLE AND SCREW KIT	1
76	21367	CARDBOARD AIR FILTER 25" X 14" X 2"	1
77	30536	LEVELING BOLT 1/4 - 20 X 1''	2
78	30710	SPRING CLIP	4
79	PL66353	ADAPTER FOR 1" FILTER	2
80	30154	BLACK ZINC SCREW #10 X 5/8" QUADREX #2 TYPE A	1
81	60461	FURNACE FAN RETROFIT HARNESS	1

#	PART	DESCRIPTION	Qty
82	PA08523	WIRING KIT FOR SERIAL INSTALLATION	1
83	51035	90-370 FAN RELAY	1
84	51019	FAN RELAY 90-382 6 PINS	1
85	21621	AIR ENTRY HATCH GASKET	1
86	SE66194	DAMPER ASSEMBLY	1
87	SE66193	COMPLETE DAMPER KIT	1
88	30084	BOLT 1/4-20 X 1/2" GRADE 5	3
89	44190	LIMIT SWITCH	1
90	PL48170	HEAT EXCHANGER SCRAPER	1
91	PL48171	ASH SHOVEL	1
92	PL48173	POKER	1
93	SE66198	FRESH AIR INTAKE ADAPTER	1
94	PL66200	AIR INTAKE COVER	1
95	51018	BAROMETRIC DAMPER 6", 7" AND 8"	1
96	SE46245	CADDY ADVANCED MANUAL KIT	1
97	44189	THERMOSTAT	1
98	PL66268	TOOL HOLDER	1
99	PL66310	BLOWER PLUG	1
100	PL66309	SIDE CONNECTOR	1
101	PL66318	BOTTOM DECO PANEL	1
102	PL66355	WIRE COVER	1
103	30163	SELF DRILLING METAL SCREW #10 X 5/8" HEX TEK	4
104	PL66315	WIRE COVER	1
105	PL66351	WIRE COVER	1
106	SE66311	SIDE DUCT	1
107	60036	TERMINAL BLOCK	1
108	31408	ELECTRONIC BOARD CLIP	4
109	30412	SNAP-IN BUSHING 7/8in.	1
110	PL66358	ELECTRONIC BOARD FOR ELECTRICAL HEATING UNIT	1
111	60024	B-VENT WIRE	2
112	60462	ETHERNET CABLE	1
113	PL66307	DECORATIVE PANEL SUPPORT	1
114	PL66308	DECORATIVE PANEL	1
115	60117	20 KW ELECTRICAL UNIT	1
116	SE66319	ELECTRICAL UNIT DEFLECTOR	1
117	60463	90" STRIPPED WIRE	3
118	60467	THERMAL PROTECTION AUTOMATIC	1
119	60468	THERMAL PROTECTION MANUAL RESET	1
120	60466	240V-24V TRANSFORMER	1
121	PL44312	MICROSD CARD PROGRAMMED FOR CONNECTED FURNACE	1
122	44311	FUSE 2A	1
123	60465	2 POLES CONTACTOR	1

#	PART	DESCRIPTION	Qty
124	PL66295	LEFT DECORATIVE COLUMN	1
125	PL66299	RIGHT DECORATIVE COLUMN	1
126	PL66300	UPPER RIGHT DECORATIVE PANEL	1
127	PL66302	RIGHT ACCESS JACKET PANEL	1
128	PL66303	LEFT ACCESS JACKET PANEL	1
129	PL66293	COVER ELECTRICAL UNIT	1
130	PL66235	BLOWER ADAPTOR	1
131	SE66322	SUB-ASSEMBLY OF ELECTRONIC LINK BOARD	1
132	PL66360	LOWER PART OF ANGLED CONDUIT	1
133	PL66361	LEFT SIDE OF ANGLED CONDUIT	1
134	PL66362	RIGHT SIDE OF ANGLED CONDUIT	1
135	PL66363	TOP OF ANGLED CONDUIT	1
136	PL66364	CONDUIT STIFFENER	1
137	31389	WIRE CLIP	1
138	SE66365	ANGLED BRACKET EXTENSION CONDUIT	1
139	60473	GAS FURNACE HARNESS	1
140	PL66370	ANGLED BRACKET CONNECTOR	1
141	PL66367	ANGLED BRACKET DECORATIVE PANEL	1
142	PA08591	HEAT PUMP HARNESS	1
143	PA08592	CONNEXION PLATE FOR DETTSON GAS FURNACE	1
144	PA08593	CONNEXION PLATE FOR NAPOELON / CONTINENTAL GAS FURNACE	1

25 ELECTRICAL DIAGRAM

25.1 BLOWER HOUSING WITH REGULAR MOTOR

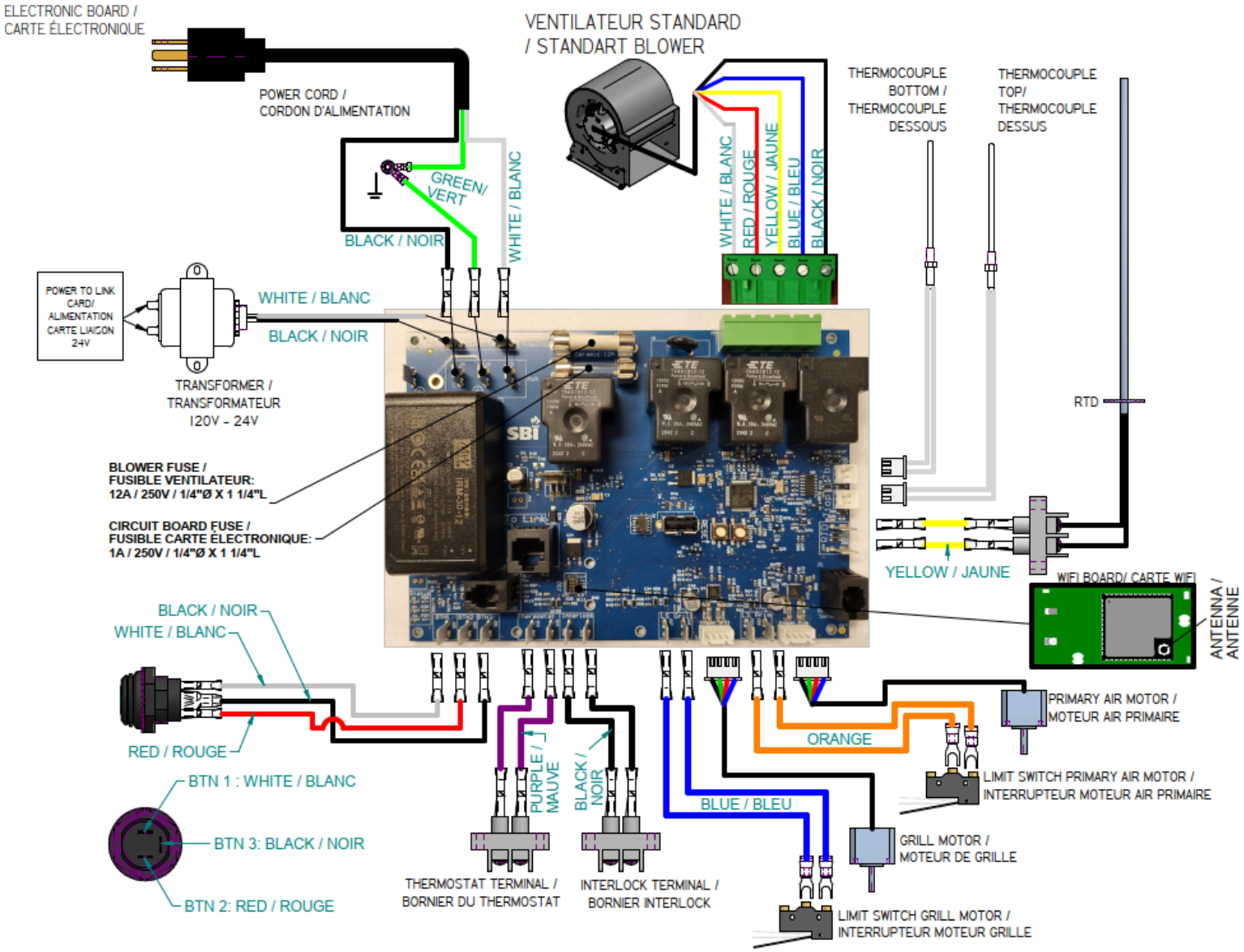

25.2 BLOWER HOUSING WITH ECM MOTOR

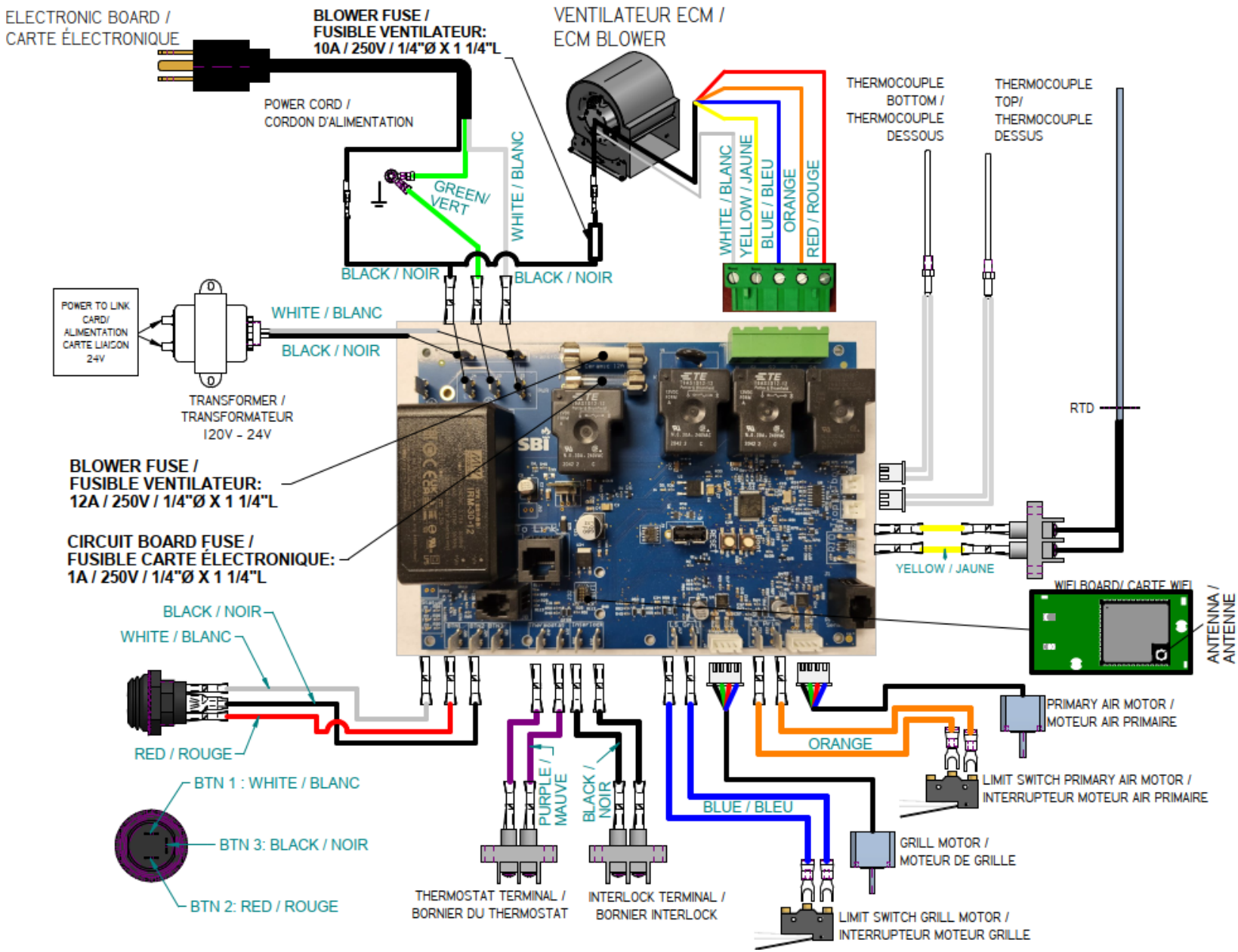

26 WHY PURCHASE THROUGH AN AUTHORIZED CADDY DEALER?

To make sure your Caddy furnace provides comfort and energy savings in your home for many years, your choice of installer is extremely important. An authorized Caddy dealer will ensure that the system is optimized and installed according to standards. Given the importance of the installation, Caddy recommends that it is carried out by a professional certified in the Building Code so that the furnace delivers its full potential.

If you want to enjoy the best service on the market and substantial savings on heating costs, there is really only one choice: an Authorized Caddy Dealer.

CADDY LIMITED WARRANTY

The warranty of the manufacturer extends only to the original consumer purchaser and is not transferable. This warranty covers brand new products only, which have not been altered, modified nor repaired since shipment from factory. Proof of purchase (dated bill of sale), model name and serial number must be supplied when making any warranty claim to your Caddy dealer.

This warranty applies to normal residential use only. Damages caused by misuse, abuse, improper installation, lack of maintenance, over firing, negligence or accident during transportation, power failures, downdrafts, or venting problems are not covered by this warranty.

The installation of a heat pump or air conditioning system in the air return can cause condensation, leading to premature aging (corrosion, etc.) of the furnace, which is not covered by the warranty.

This warranty does not cover any scratch, corrosion, distortion, or discoloration. Any defect or damage caused by the use of unauthorized parts or others than original parts void this warranty. An authorized qualified technician must perform the installation in accordance with the instructions supplied with this product and all local and national building codes. Any service call related to an improper installation is not covered by this warranty.

The manufacturer may require that defective products be returned or that digital pictures be provided to support the claim. Returned products are to be shipped prepaid to the manufacturer for investigation. If a product is found to be defective, the manufacturer will repair or replace such defect. Transportation fees to ship the product back to the purchaser will be paid by the manufacturer. All parts costs covered by this warranty are limited according to the table below.

The manufacturer at its discretion may decide to repair or replace any part or unit after inspection and investigation of the defect. The manufacturer may, at its discretion, fully discharge all obligations with respect to this warranty by refunding the wholesale price of any warranted but defective parts. The manufacturer shall in no event be responsible for any special, indirect, consequential damages of any nature, which are in excess of the original purchase price of the product. This warranty applies to products purchased after July 1st 2024

DESCRIPTION	WARRANTY APPLICATION	
	PARTS	LABOUR
Castings, combustion chamber (welds only), castings, and heat exchanger (welds only)	10 years**	3 years***
Stainless steel combustion chamber components, secondary air tubes*, surrounds and heat shields and ash drawer	5 years	1 year***
Carbon steel combustion chamber components, glass retainers, handle assembly, vermiculite, C-Cast or equivalent baffle*	3 years	N/A
Electrical elements, blowers, heat sensors, switches, rheostat, relays, damper motor, fan limit control, PC board, wiring, and other controls	2 years	1 year***
Ceramic glass (thermal breakage only*), paint (peeling), gaskets, insulation, and ceramic fibre blankets	1 year	N/A
Firebrick	N/A	N/A
All parts replaced under the warranty	90 days	N/A

***Pictures required ** Parts subjected to a 10 years limit warranty are limited to one replacement during that period *** Applicable only if installed by a professional authorized and accredited by the construction code.**

Shall your unit or a component be defective, immediately contact your Caddy dealer. Prior to your call make sure you have the following information necessary to your warranty claim treatment:

- ✓ Your name, address and telephone number
- ✓ Bill of sale and dealer's name
- ✓ Installation configuration
- ✓ Nature of the defect and any relevant information
- ✓ Serial number and model name as indicated on the nameplate fixed to the back of your unit.

Before shipping your unit or defective component to our plant, you must obtain, from your Caddy dealer, an Authorization Number. Any merchandise shipped to our plant without authorization will be refused automatically and returned to sender.