Installation and operating instructions for the CADDY ADVANCED CR WOOD SERIAL ADD-ON (PF01021)

Certified according to CSA B415.1-10, CSA B366.1, UL 391.

Read these instructions carefully before installing and operating your furnace.

CONGRATULATIONS!

You have purchased one of the finest wood furnaces available on the market. We are confident that your furnace will provide years of comfort and safe operation.

Please save these instructions!

Verified and tested for Canada and the United States by an accredited laboratory.

This manual is available for free download on the manufacturer's web site. It is a copyrighted document. Resale is strictly prohibited. The manufacturer may update this manual from time to time and cannot be responsible for problems, injuries, or damages arising out of the use of information contained in any manual obtained from unauthorized sources.

Eco-energy at the hearth of your home

Caddy
250, de Copenhague,
St-Augustin-de-Desmaures
(Québec)
CANADA G3A 2H3

Printed in Canada

46371A
2026-08-20

TABLE OF CONTENT

1 INTRODUCTION 4
2 FURNACE PERFORMANCE (1) 5
3 GENERAL FEATURES 6
4 SPECIFICATIONS 7
5 LABELS 8
6 TECHNICAL DATA OF THE CADDY ADVANCED CR ADD-ON SERIE 10
7 CADDY ADVANCED CR ADD-ON DIMENSIONS 10
8 CHIMNEY AND DRAFT 11
9 SAFETY RULES 11
9.1 GENERAL REQUIREMENTS 11
9.2 ODOUR FROM THE PAINT 12
9.3 ASH DISPOSAL 12
9.4 CREOSOTE BUILD-UP AND REMOVAL 12
9.5 SMOKE DETECTOR 12
9.6 DOOR GLASS 12
9.7 ASH DRAWER 12
9.8 ASH GRATE 12
9.9 ADDITIONAL FRESH AIR SUPPLY 13
10 FIREWOOD 14
10.1 TREE SPECIES 14
10.2 LOG LENGTH 14
10.3 LOG SIZE 14
10.4 HOW TO DRY FIREWOOD? 14
10.5 FIREWOOD MOISTURE CONTENT 15
CADDY ADVANCED CR SERIAL ADD-ON INSTALLATION PF01021 16
11 SAFETY PRECAUTION 17
12 INTRODUCTION 17
12.1 BLOWER OF THE EXISTING FURNACE 17
13 APPLIANCE INSTALLATION 17
13.1 DUCTING ARRANGEMENT BETWEEN THE TWO FURNACES 17
14 MINIMUM CLEARANCES TO COMBUSTIBLE MATERIALS 22
14.1 MINIMUM CLEARANCES TO COMBUSTIBLES MATERIALS FOR AIR RETURN DUCT 23
14.2 MINIMUM CLEARANCES TO COMBUSTIBLES MATERIALS FOR HOT AIR DUCTING 23
14.3 FLOOR PROTECTION 23
14.4 INSTALLING THE AIR SUPPLY DUCT FROM THE EXISTING FURNACE 23
14.5 PIPE CONNECTOR 24
14.6 ELECTRICAL CONNECTION SERIAL FURNACE 24
14.7 INSTALLATION INSTRUCTIONS 24
14.8 HOT AIR PLENUM TEMPERATURE PROBE INSTALLATION AND CONNECTION (RTD) 24
14.9 UNIT LOCATION 27
14.10 FURNACE PIPE CONNECTION 27
14.11 ELECTRICAL WIRING 29
14.12 DRAFT REQUIREMENTS 29
14.13 FRESH AIR SUPPLY INSTALLATION 30
14.14 TOOL HOLDER INSTALLATION 30
14.15 HOT AIR PLENUM 32
15 HEATPUMP / AIR CLIMATIZATION INSTALLATION 33
16 GAS FURNACE INSTALLATION 34
17 THERMOSTAT INSTALLATION 35
17.1 SERIAL ADD-ON ONLY 35
FURNACE OPERATION 39
18 HOW IT WORKS? 39
18.1 HOW RELOAD BUTTON WORKS? 39
18.2 HOW TO LIGHT AND RELOAD THE FURNACE 40
18.2.1 COLD START AND COAL EMBER BED (The led button light is OFF) 41
18.2.2 HOT EMBER BED RELOAD (The led button light is ON or slowly blinking) 41
18.3 YOUR FIRST FIRES 42
18.4 LIGHTING FIRES 43
18.4.1 CONVENTIONAL FIRE STARTING 43
18.4.2 THE TOP-DOWN FIRE 43
18.4.3 TWO PARALLEL LOGS 43
18.4.4 USING FIRE STARTERS 43
19. MAINTAINING WOOD FIRES 44

19.1 GENERAL ADVICE 44
19.1.1 RAKING EMBERS 44
19.1.2 RELOADING WITH EMBERS 45
19.1.3 CONTROL OF THE AIR SUPPLY 45
19.1.4 BUILDING DIFFERENT FIRES FOR DIFFERENT NEEDS 45
19.1.5 SMALL FIRES TO TAKE THE CHILL OUT OF THE HOME 45
19.1.6 LONG LASTING LOW OUTPUT FIRES 45
19.1.7 HIGH OUTPUT FIRES FOR COLD WEATHER 45
19.1.8 MAXIMUM BURN CYCLE TIMES 45
19.2 PROLONGED POWER OUTAGE 45
20. THE VENTING SYSTEM 46
20.1 GENERAL 46
20.2 SUITABLE CHIMNEYS 46
20.3 FACTORY-BUILT METAL CHIMNEYS 46
20.3.1 MASONRY CHIMNEYS 46
20.4 MINIMUM CHIMNEY HEIGHT 47
20.5 CHIMNEY LOCATION 48
20.6 SUPPLY OF COMBUSTION AIR 49
20.6.1 Conventional Home 49
20.7 INSTALLING THE CHIMNEY CONNECTOR 50
20.7.1 INSTALLATION OF SINGLE WALL CHIMNEY CONNECTOR 50
21. FURNACE MAINTENANCE 52
21.1 ASH REMOVAL 52
21.2 CLEANING DOOR GLASS 53
21.3 DOOR ADJUSTMENT 53
21.4 REPLACEMENT OF THE GLASS AND GASKETS 54
21.5 MAINTENANCE OF FURNACE EXTERIOR FINISH 55
21.6 HEAT EXCHANGERS CARE 55
21.7 THERMOCOUPLES CARE 59
21.8 CHIMNEY MAINTENANCE 60
21.9 REFRACTORY BRICK INSPECTION 60
21.10 SMOKE PIPE INSPECTION 60
21.11 INSTALLATION OF SECONDARY AIR TUBES AND BAFFLE 60
22. TROUBLESHOOTING 62
23. OPTIONAL ACCESSORIES 63
24. EXPLODED DIAGRAM AND PARTS LIST 64
25. ELECTRICAL DIAGRAM FOR STAND-ALONE FURNACE 78
26. WHY PURCHASE THROUGH AN AUTHORIZED CADDY DEALER? 79
CADDY LIMITED WARRANTY 80

IMPORTANT NOTE:

This furnace and its hot air duct system must be sold and installed by a professional. In the absence of a professional installer, the manufacturer reserves the right not to apply its warranty or to refuse any technical support.

REGISTER YOU WARRANTY ONLINE AND NETWORK CONNECTIVITY

To receive full warranty coverage, you will need to show evidence of the date you purchased your furnace. Keep your sales invoice. We also recommend that you register your warranty online at: https://www.caddyfurnaces.com/en/warranty/warranty-registration

Registering your warranty online will help us track rapidly the information we need on your furnace.

For support purposes and to improve your customer experience, you can connect your Caddy Advanced CR furnace to the wireless network where it is installed. Please contact our Technical Service Department.

1 INTRODUCTION

This furnace uses the *Dual Fire*© technology with a two-stage electronic combustion control. Find peace of mind with a self-regulated combustion that allows easy ignition. Its automated air supply and self regulated systems synchronize with your thermostat to offer additional safety, optimize comfort, and reduce emissions with minimal maintenance. This model meets the emissions limits of CSA B415.1-10 Standard and EPA 40CFR Part 60, subpart QQQQ (2020 limit).
To optimize the efficiency of your furnace, here is some advice that you should follow when installing or operating your Caddy Advanced CR.

- Respect the local codes (when in doubt, consult your local dealer).
- Make sure your furnace is installed according to the instructions on the certification label.
- All controls and adjustments must be performed by a qualified technician. The blower speed must conform to the recommendations of local codes and should respect the static pressure ranges in the warm air plenum of the furnace.

We recommend that our wood burning hearth products be installed and serviced by professionals who are certified in the United States by NFI (National Fireplace Institute®) or in Canada by WETT (Wood Energy Technology Transfer) or in Quebec by APC (Association des Professionnels du Chauffage).
This furnace has been developed and built for residential heating. Commercial and industrial use is prohibited and will void the warranty.

2 FURNACE PERFORMANCE (1)

Fuel type	Dry cordwood	
Recommended heating area [*]	1,000 to 2,500 ft² (93 à 232 m²)	
Combustion chamber volume	3.6 ft³ (0.102 m³)	
Maximum burn time [*]	10 h	
Maximum input capacity (dry cordwood) (2)	310,000 BTU	
Overall heat output rate (min. to max.) (3)	19,354 BTU/h to 47,052 BTU/h (5.6 kW to 13.8 kW)	
Average overall efficiency (8)	76.6% (HHV) (5)	82.0% (LHV) (6)
Delivered heat output rate (min. to max.) (7)	13,297 BTU/h to 42,234 BTU/h (3.9 kW to 12.4 kW)	
Average delivered efficiency (4)	60.7% (HHV) (5)	65.0% (LHV) (6)
Optimum overall efficiency (9)	83.2%	
Optimum heat transfer efficiency (14)	81%	
Average particulate emissions rate (10)(11)	0.095 lb/mmBTU (0.041 g/MJ)	
Average CO (12)	8.78 lb/mmBTU (3.78 g/MJ)	
Average electrical power consumption (13)	30 W	

[*] Recommended heating area and maximum burn time may vary subject to furnace location in home, chimney draft, heat loss factors, climate, fuel type and other variables. The recommended heating area for a given appliance is defined by the manufacturer as its capacity to maintain a minimum acceptable temperature considering that the space configuration and the presence of heat distribution systems have a significant impact in making heat circulation optimum.

(1) combustion chamber Values as certified to CSA B415.1-10, except for recommended heating area, combustion chamber volume, maximum burn time and maximum input capacity. Performances based on a fuel load prescribed by the standard at 10 lb./ft³ and with moisture content between 18% and 28%.

(2) Input value at 10lb/ft³ fuel loading density and dry energy value of 8,600BTU/lb.

(3) Overall: Radiated and delivered heat together at 10lb./ft³ fuel loading density over one total burn cycle.

(4) Efficiency based on delivered heat when allowing cycling from high to low burn to simulate thermostat demand.

(5) Higher Heating Value of the fuel.

(6) Lower Heating Value of the fuel.

(7) Delivered: Remotely provided to other rooms through ducting at 10 lb./ft³ fuel loading density over one total burn cycle.

(8) Efficiency based on radiated and delivered heat when allowing cycling from high to low burn to simulate thermostat demand.

(9) Optimum overall efficiency at a specific burn rate (LHV).

(10) Based on delivered heat output.

(11) This appliance is officially tested and certified by an independent agency.

(12) Carbon Monoxide. Based on overall heat output at 10lb./ft³ fuel loading density.

(13) Unless stated otherwise, measures were taken directly at the main power source and include all electrical components present in the appliance.

(14) The optimum heat transfer efficiency is for the low burn rate and represents the appliance's ability to convert the energy contained in the wood logs into energy transferred to the room in the form of heat and does not consider the chemical losses during combustion.

3 GENERAL FEATURES

Maximum log length	21 in (533 mm) / north-south**
Diameter of the flue collar	6 in (152 mm)
Recommended connector pipe diameter	6 in (152 mm)
Recommended chimney diameter	6 in (152 mm)
Required type of chimney	CAN/ULC S629 (2100 °F)
Baffle material	C-Cast or equivalent
Alcove installation	Not approved
Mobile home installation‡	Not approved
Filter - dimensions (Width x Height x Depth) (included with optional blower assembly)	14 in x 25 in x 2 in (356 mm x 635 mm x 51 mm)
Filter - quantity	1
Particulate emission standard	EPA / CSA B415.1-10
USA standard (safety)	UL 391
Canadian standard (safety)	CSA B366.1

*** East-west: through the door you see the longitudinal sides of the logs; north-south: through the door you see the tips of the logs.*

‡ Mobile home (Canada) or manufactured home (USA): The US department of Housing and Urban Development describes "manufactured homes" better known as "mobile homes" as follows; buildings built on fixed wheels and those transported on temporary wheels/axles and installed on a permanent foundation. In Canada, a mobile home is a dwelling in which the assembly of each component is completed or substantially completed before the dwelling is moved to a location to be placed on a foundation, connected to service facilities and which meets the CAN/CSA-Z240 MH standard.

4 SPECIFICATIONS

Color	Grey and black
Thermostatic control	Yes
Door type	Single, glass with cast iron frame
Glass type	Ceramic glass
Air return plenum - dimensions (Depth or Height)	15 3/4 in
Air return plenum - dimension (Width)	24 3/4 in
Hot air plenum - dimensions (Depth or Height)	28 5/8 in
Hot air plenum - dimension (Width)	24 1/2 in
Ash pan - dimensions (Width x Depth x Height)	13 5/8 in x 20 1/2 in x 4 in
Clearance - front	48 in
Clearance - back wall	24 in from the control board housing recommended service clearance
Clearance - side wall	6 in
Clearance - side wall	24 in recommended service clearance
Clearances - ducts	6 in for the first 6 feet and 1 in after
Clearance - recommended for maintenance on left side	24 in
Top cold air plenum option - material	Galvanized steel
Top cold air plenum option - dimensions (Width x Depth x Height)	24 7/8 in x 15 7/8 in x 10 3/4 in
Top cold air plenum option - smoke pipe diameter	6 in
Fresh air intake adapter option	5 in
Fresh air intake adapter - connection location	Left or right
Tested and listed as per applicable standards	By an accredited laboratory (CAN/USA)
Warranty	Limited lifetime

5 LABELS

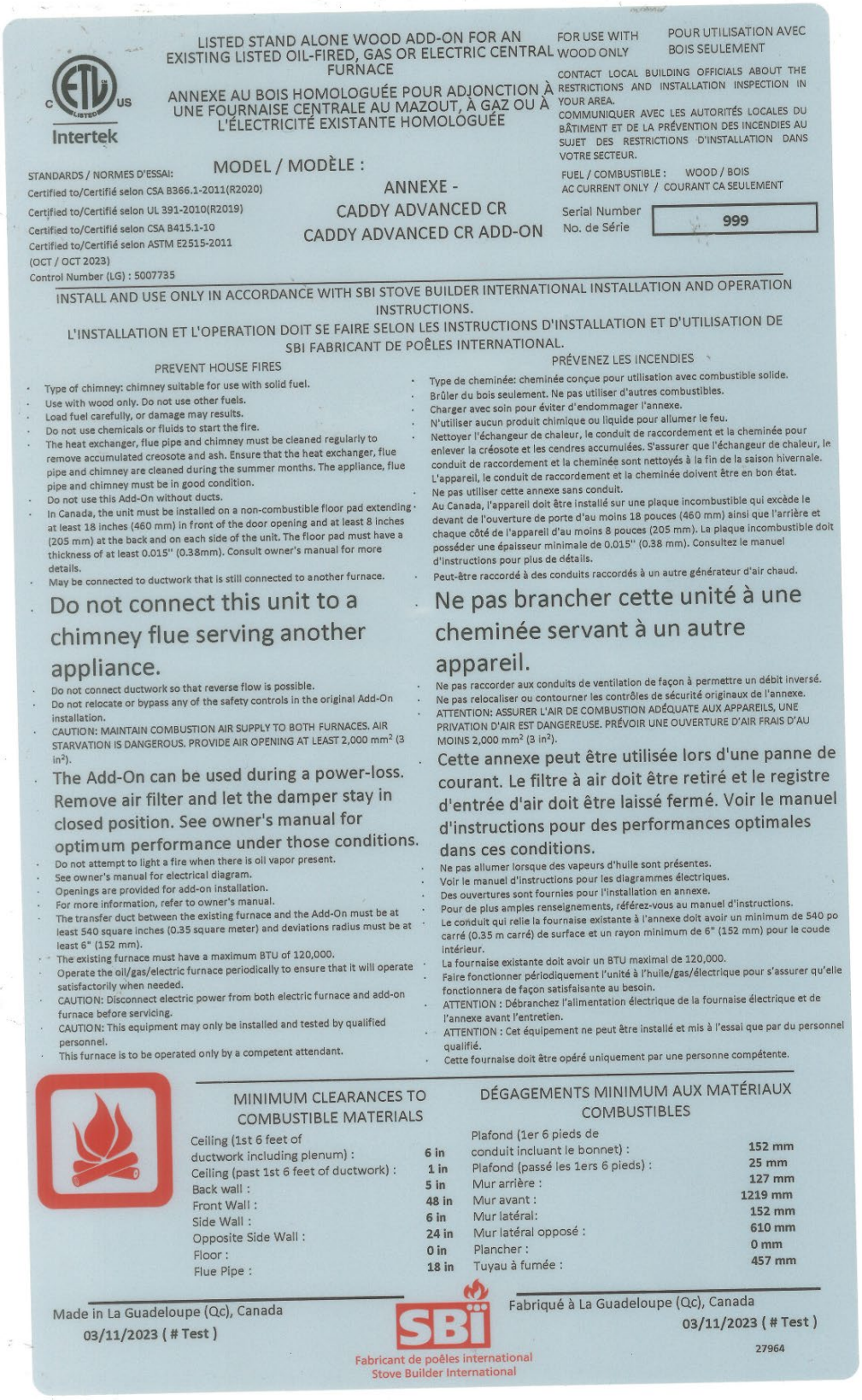

LISTED STAND ALONE WOOD ADD-ON FOR AN EXISTING LISTED OIL-FIRED, GAS OR ELECTRIC CENTRAL FURNACE

ANNEXE AU BOIS HOMOLOGUÉE POUR ADJONCTION À UNE FOURNAISE CENTRALE AU MAZOUT, À GAZ OU À L'ÉLECTRICITÉ EXISTANTE HOMOLOGUÉE

FOR USE WITH WOOD ONLY

POUR UTILISATION AVEC BOIS SEULEMENT

CONTACT LOCAL BUILDING OFFICIALS ABOUT THE RESTRICTIONS AND INSTALLATION INSPECTION IN YOUR AREA.

COMMUNIQUER AVEC LES AUTORITÉS LOCALES DU BÂTIMENT ET DE LA PRÉVENTION DES INCENDIES AU SUJET DES RESTRICTIONS D'INSTALLATION DANS VOTRE SECTEUR.

Intertek

STANDARDS / NORMES D'ESSAI:
Certified to/Certifié selon CSA B366.1-2011(R2020)
Certified to/Certifié selon UL 391-2010(R2019)
Certified to/Certifié selon CSA B415.1-10
Certified to/Certifié selon ASTM E2515-2011 (OCT / OCT 2023)
Control Number (LG) : 5007735

MODEL / MODÈLE :
ANNEXE -
CADDY ADVANCED CR
CADDY ADVANCED CR ADD-ON

FUEL / COMBUSTIBLE : WOOD / BOIS
AC CURRENT ONLY / COURANT CA SEULEMENT

Serial Number / No. de Série: 999

INSTALL AND USE ONLY IN ACCORDANCE WITH SBI STOVE BUILDER INTERNATIONAL INSTALLATION AND OPERATION INSTRUCTIONS.

L'INSTALLATION ET L'OPERATION DOIT SE FAIRE SELON LES INSTRUCTIONS D'INSTALLATION ET D'UTILISATION DE SBI FABRICANT DE POÊLES INTERNATIONAL.

PREVENT HOUSE FIRES

- Type of chimney: chimney suitable for use with solid fuel.
- Use with wood only. Do not use other fuels.
- Load fuel carefully, or damage may results.
- Do not use chemicals or fluids to start the fire.
- The heat exchanger, flue pipe and chimney must be cleaned regularly to remove accumulated creosote and ash. Ensure that the heat exchanger, flue pipe and chimney are cleaned during the summer months. The appliance, flue pipe and chimney must be in good condition.
- Do not use this Add-On without ducts.
- In Canada, the unit must be installed on a non-combustible floor pad extending at least 18 inches (460 mm) in front of the door opening and at least 8 inches (205 mm) at the back and on each side of the unit. The floor pad must have a thickness of at least 0.015" (0.38mm). Consult owner's manual for more details.
- May be connected to ductwork that is still connected to another furnace.

Do not connect this unit to a chimney flue serving another appliance.

- Do not connect ductwork so that reverse flow is possible.
- Do not relocate or bypass any of the safety controls in the original Add-On installation.
- CAUTION: MAINTAIN COMBUSTION AIR SUPPLY TO BOTH FURNACES. AIR STARVATION IS DANGEROUS. PROVIDE AIR OPENING AT LEAST 2,000 mm² (3 in²).

The Add-On can be used during a power-loss. Remove air filter and let the damper stay in closed position. See owner's manual for optimum performance under those conditions.

- Do not attempt to light a fire when there is oil vapor present.
- See owner's manual for electrical diagram.
- Openings are provided for add-on installation.
- For more information, refer to owner's manual.
- The transfer duct between the existing furnace and the Add-On must be at least 540 square inches (0.35 square meter) and deviations radius must be at least 6" (152 mm).
- The existing furnace must have a maximum BTU of 120,000.
- Operate the oil/gas/electric furnace periodically to ensure that it will operate satisfactorily when needed.
- CAUTION: Disconnect electric power from both electric furnace and add-on furnace before servicing.
- CAUTION: This equipment may only be installed and tested by qualified personnel.
- This furnace is to be operated only by a competent attendant.

PRÉVENEZ LES INCENDIES

- Type de cheminée: cheminée conçue pour utilisation avec combustible solide.
- Brûler du bois seulement. Ne pas utiliser d'autres combustibles.
- Charger avec soin pour éviter d'endommager l'annexe.
- N'utiliser aucun produit chimique ou liquide pour allumer le feu.
- Nettoyer l'échangeur de chaleur, le conduit de raccordement et la cheminée pour enlever la créosote et les cendres accumulées. S'assurer que l'échangeur de chaleur, le conduit de raccordement et la cheminée sont nettoyés à la fin de la saison hivernale. L'appareil, le conduit de raccordement et la cheminée doivent être en bon état.
- Ne pas utiliser cette annexe sans conduit.
- Au Canada, l'appareil doit être installé sur une plaque incombustible qui excède le devant de l'ouverture de porte d'au moins 18 pouces (460 mm) ainsi que l'arrière et chaque côté de l'appareil d'au moins 8 pouces (205 mm). La plaque incombustible doit posséder une épaisseur minimale de 0.015" (0.38 mm). Consultez le manuel d'instructions pour plus de détails.
- Peut-être raccordé à des conduits raccordés à un autre générateur d'air chaud.

Ne pas brancher cette unité à une cheminée servant à un autre appareil.

- Ne pas raccorder aux conduits de ventilation de façon à permettre un débit inversé.
- Ne pas relocaliser ou contourner les contrôles de sécurité originaux de l'annexe.
- ATTENTION: ASSURER L'AIR DE COMBUSTION ADÉQUATE AUX APPAREILS, UNE PRIVATION D'AIR EST DANGEREUSE. PRÉVOIR UNE OUVERTURE D'AIR FRAIS D'AU MOINS 2,000 mm² (3 in²).

Cette annexe peut être utilisée lors d'une panne de courant. Le filtre à air doit être retiré et le registre d'entrée d'air doit être laissé fermé. Voir le manuel d'instructions pour des performances optimales dans ces conditions.

- Ne pas allumer lorsque des vapeurs d'huile sont présentes.
- Voir le manuel d'instructions pour les diagrammes électriques.
- Des ouvertures sont fournies pour l'installation en annexe.
- Pour de plus amples renseignements, référez-vous au manuel d'instructions.
- Le conduit qui relie la fournaise existante à l'annexe doit avoir un minimum de 540 po carré (0.35 m carré) de surface et un rayon minimum de 6" (152 mm) pour le coude intérieur.
- La fournaise existante doit avoir un BTU maximal de 120,000.
- Faire fonctionner périodiquement l'unité à l'huile/gas/électrique pour s'assurer qu'elle fonctionnera de façon satisfaisante au besoin.
- ATTENTION : Débranchez l'alimentation électrique de la fournaise électrique et de l'annexe avant l'entretien.
- ATTENTION : Cet équipement ne peut être installé et mis à l'essai que par du personnel qualifié.
- Cette fournaise doit être opéré uniquement par une personne compétente.

MINIMUM CLEARANCES TO COMBUSTIBLE MATERIALS

Ceiling (1st 6 feet of ductwork including plenum) :	6 in
Ceiling (past 1st 6 feet of ductwork) :	1 in
Back wall :	5 in
Front Wall :	48 in
Side Wall :	6 in
Opposite Side Wall :	24 in
Floor :	0 in
Flue Pipe :	18 in

DÉGAGEMENTS MINIMUM AUX MATÉRIAUX COMBUSTIBLES

Plafond (1er 6 pieds de conduit incluant le bonnet) :	152 mm
Plafond (passé les 1ers 6 pieds) :	25 mm
Mur arrière :	127 mm
Mur avant :	1219 mm
Mur latéral:	152 mm
Mur latéral opposé :	610 mm
Plancher :	0 mm
Tuyau à fumée :	457 mm

Made in La Guadeloupe (Qc), Canada
03/11/2023 (# Test)

SBI
Fabricant de poêles international
Stove Builder International

Fabriqué à La Guadeloupe (Qc), Canada
03/11/2023 (# Test)

27964

REFER TO INTERTEK'S DIRECTORY OF BUILDING PRODUCTS FOR DETAILED INFORMATION
SE RÉFÉRER AU RÉPERTOIRE DES PRODUITS HOMOLOGUÉS D'INTERTEK POUR PLUS D'INFORMATION

Intertek

STANDARDS / NORMES D'ESSAI:
Certified to/Certifié selon CSA B366.1-2011(R2020)
Certified to/Certifié selon UL 391-2010(R2019)
Certified to/Certifié selon CSA B415.1-10
Certified to/Certifié selon ASTM E2515-2011
(OCT / OCT 2023)
Control Number (LG) : 5007735

PERFORMANCE TESTING OF SOLID-FUEL BURNING HEATING APPLIANCE

RENDEMENT D'APPAREIL DE CHAUFFAGE À COMBUSTION SOLIDE

MODEL / MODÈLE :

ANNEXE -

CADDY ADVANCED CR

CADDY ADVANCED CR ADD-ON

PERFORMANCE TECHNICAL DATA FROM CSA B-415.1-10 / DONNÉES TECHNIQUES DE PERFORMANCE RELATIVE À LA NORME CSA B-415.1-10

- The stated efficiency is based on the higher heating value of the fuel.
- The minimum and maximum delivered heat output rate are based on the tests performed in determining the average emissions rates.
- The average efficiency is based on the amount of delivered heat.

- Le rendement annoncé est basé sur le pouvoir calorifique supérieur du combustible.
- Les puissances thermiques minimales et maximales sont basées sur les essais réalisés pour la détermination du taux moyen d'émission de particules.
- Le rendement moyen est basé sur la quantité de chaleur transportée.

AVERAGE PARTICULATE EMISSION RATE / TAUX MOYEN D'ÉMISSION DE PARTICULE:	0.095 lb/mmBTU 0.041 g/MJ	MINIMUM DELIVERED HEAT OUTPUT RATE / PUISSANCE THERMIQUE MINIMALE:	13 297 kJ/h
AVERAGE EFFICIENCY / RENDEMENT MOYEN:	60.7%	MAXIMUM DELIVERED HEAT OUTPUT RATE / PUISSANCE THERMIQUE MAXIMALE:	42 234 kJ/h
AVERAGE OVERALL EFFICIENCY / RENDEMENT MOYEN GLOBAL:	76.6%	MINIMUM OVERALL HEAT OUTPUT RATE / PUISSANCE THERMIQUE GLOBALE MINIMALE:	19 354 kJ/h
AVERAGE ELECTRICAL POWER CONSUMPTION / CONSOMMATION D'ÉLECTRICITÉ MOYENNE:	330 W	MAXIMUM OVERALL HEAT OUTPUT RATE / PUISSANCE THERMIQUE GLOBALE MAXIMALE:	47 052 kJ/h

U.S. ENVIRONMENTAL PROTECTION AGENCY Certified to comply with the 2020 particulate emission standards using cord wood./AGENCE DE PROTECTION DE L'ENVIRONNEMENT DES É.U. (EPA). Conforme aux normes d'émission de particules de 2020 avec bûches de bois.
This appliance needs periodic inspection and repair for proper operation. Consult the owner's manual for further information./Cet appareil requiert des inspections et réparations périodiques. Consulter le manuel de l'utilisateur pour plus d'information.
It is against US federal regulations to operate this appliance in a manner inconsistent with the operating instructions in the owner's manual./Opérer cet appareil de chauffage de façon inconsistente par rapport au manuel de l'utilisateur consiste une violation de la loi fédérale (USA).

DANGER: Risk of fire or explosion
- Do not burn garbage, gasoline, naphta, engine oil, drain oil, other inapropriate materials or other flammable liquids.

WARNING: Risk of fire
- Do not operate with flue draft exceeding 0.06" W.C. (15Pa).
- Do not operate with fuel loading or ash removal doors open.
- Do not store fuel or other combustible material within marked installation clearances.
- Inspect and clean flues and chimney regularly.

CAUTION: Hot surfaces
- Keep children away.
- Do not touch during operation.

DANGER: Risque d'incendies ou d'explosion
- Ne pas brûler d'ordures, d'essence, de naphta, d'huile moteur, tout autre matériels inapproprié ou tout autre liquides inflammable.

AVERTISSEMENT: Risque d'incendies
- Ne pas utiliser si le tirage excède 0.06" C.E. (15Pa).
- Ne pas utiliser avec les portes d'accès et/ou de chargement ouverte.
- Ne pas entreposer de combustible ou matériaux combustibles à l'intérieur des dégagements prescrits.
- Inspecter et nettoyer le conduit de raccordement ainsi que la cheminée fréquemment.

ATTENTION: Surfaces chaudes
- Éloigner les enfants.
- Ne pas toucher pendant le fonctionnement.

TECHNICAL DATA
DONNÉES TECHNIQUES

Max Output T°/ T° max Sortie	195 °F 91 °C
Ext. Static Pressure/ Pression Statique Ext.	0.2" - 0.5" W.C. 0.2" - 0.5" C.E.
Electrical Rating / Alimentation Électrique	120V, 2.8 AMPS, 60Hz

PROCEDURE TO FOLLOW IN CASE OF RUN-AWAY FIRE
1) Turn down thermostat
2) Keep fuel door closed
3) Close all combustion air controls

EN CAS D'INCENDIE DE CHEMINÉE
1) Baisser le thermostat
2) Maintenir la porte de chargement fermée
3) Fermer tous les dispositifs d'admission d'air

Made in La Guadeloupe (Qc), Canada
03/11/2023 (# Test)

SBI
Fabricant de poêles international
Stove Builder International

Fabriqué à La Guadeloupe (Qc), Canada
03/11/2023 (# Test)
27965

6 TECHNICAL DATA OF THE CADDY ADVANCED CR ADD-ON SERIE

MODEL	VARIABLE TEMPERATURE	STATIC PRESSURE	
CADDY ADVANCED CR ADD-ON (SERIAL INSTALLATION)	(°F)	MIN.	MAX.
		H2O	
	55	0,2	0,5

7 CADDY ADVANCED CR ADD-ON DIMENSIONS

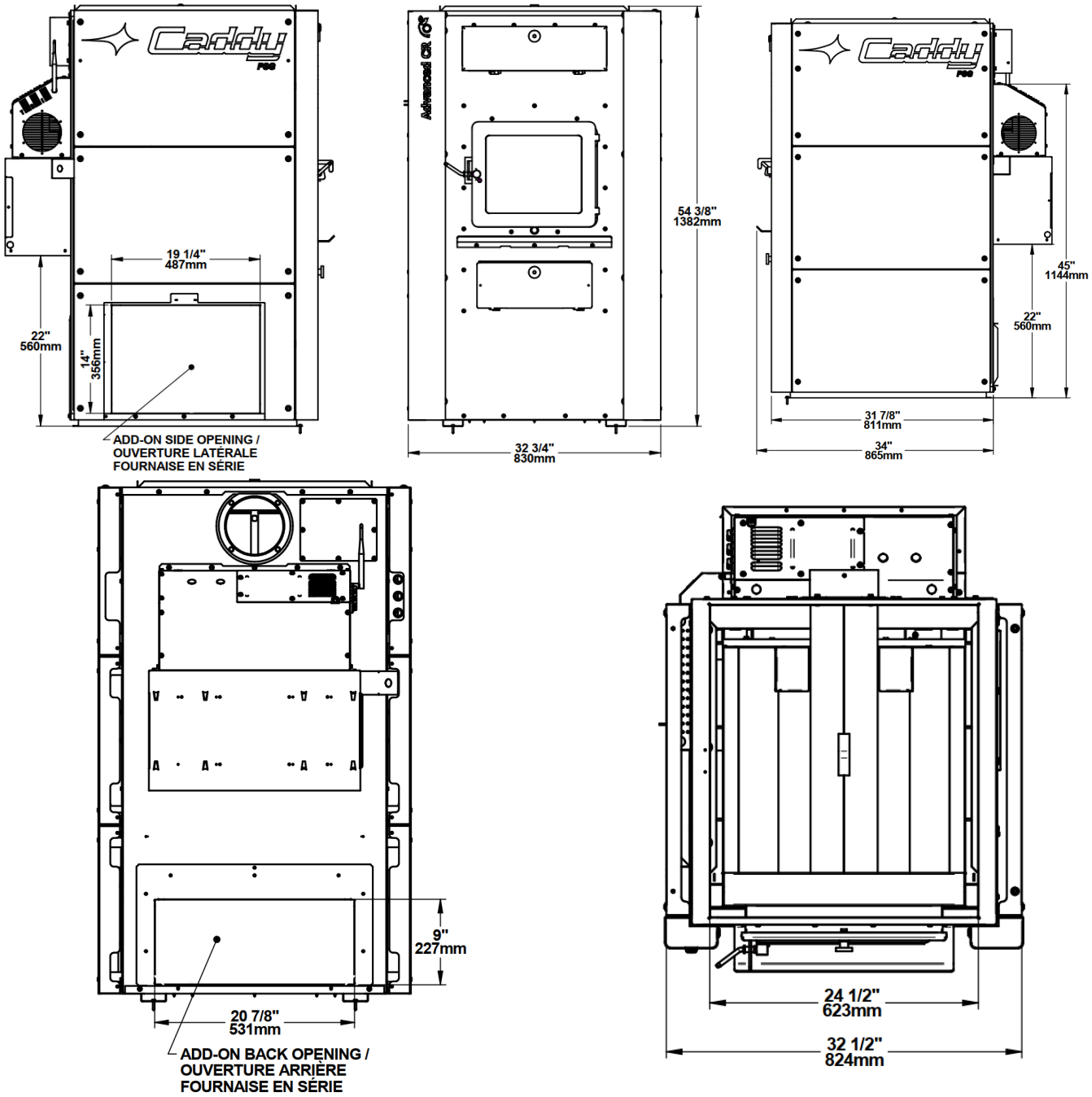

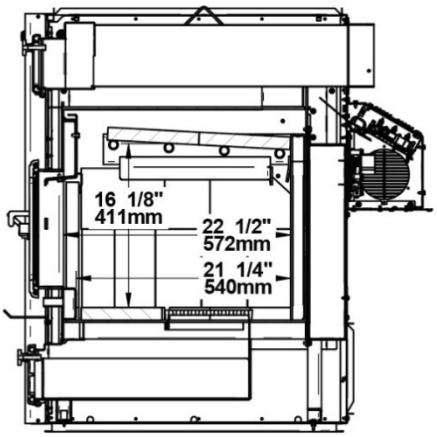

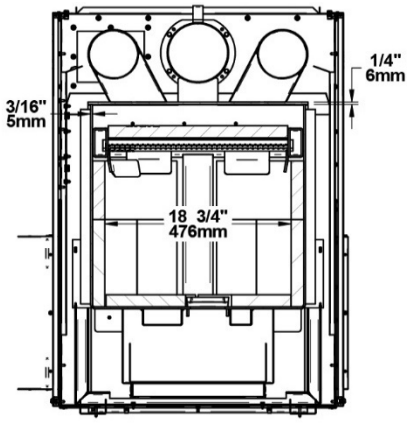

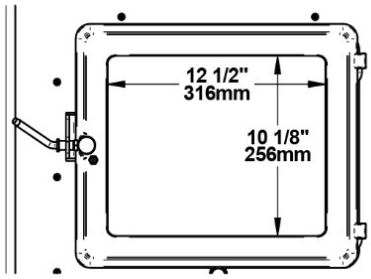

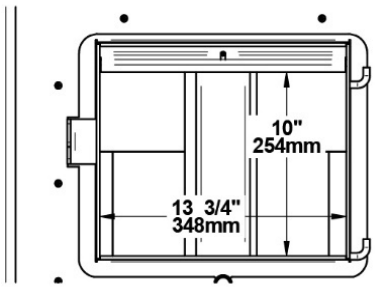

8 CHIMNEY AND DRAFT

This furnace must be connected to a chimney certified for use with wood burning heating appliances, a 6-inch diameter chimney is recommended.

The unit is not to be connected to a chimney being used by another appliance. If the chimney draft exceeds 0.06 IN.W.C., a barometric draft control that is supplied with the appliance. **Never install a manual damper**. The barometric draft control must be adjusted so that the maximum draft measured at the furnace outlet does not exceed 0.06 IN.W.C. Excessive draft can overheat the appliance and reduce burn time. On the other hand, a lack of draft can lead to poor combustion and backdrafts.

9 SAFETY RULES

WARNING! THE INFORMATION GIVEN ON THE CERTIFICATION LABEL AFFIXED TO THE APPLIANCE ALWAYS TAKES PREDEDENCE OVER INFORMATION PUBLISHED, IN ANY OTHER MEDIA (OWNER'S MANUALS, CATALOGS, FLYERS, MAGAZINES, OR WEB SITES).

9.1 GENERAL REQUIREMENTS

- **Make sure the chimney outlet and the pipes are clean and in good condition.**
- **The Caddy Advanced CR Add-on furnace must be connected to a duct system and chimney that are in good operating condition.**
- **Do not use chemical products or liquids to light the fire.**
- **Do not burn wood coated with paint, glue, or chemical products.**
- **Do not burn waste, flammable liquids such as gasoline, naphtha, engine oil, or other inappropriate materials.**
- **Do not store wood in the vicinity of the furnace. Respect the required clearances between combustible materials and the heat source.**
- **Caution: the combustion air damper should never be altered for increased firing for any reason whatsoever.**
- **DO NOT CONNECT, UNDER ANY CIRCUMSTANCES, TO THE CHIMNEY OR VENT SERVING A GAS FURNACE OR GAS APPLIANCE.**

WARNING! THE ASH DRAWER AND EXCHANGERS ACCESS PANEL GET VERY HOT.AND MUST NOT BE HANDLED WITH BARE HANDS

WARNING: This product can expose you to chemicals including carbon monoxide, which is known to the State of California to cause cancer, birth defects or other reproductive harm. For more information go to www.P65warnings.ca.gov/

9.2 ODOUR FROM THE PAINT

It is normal that smoke and odours emanate from the unit when you first light it. It is recommended to burn it at high rate and ventilate the building until the odours disappear. The smoke is not toxic. **This should be done before the ducts are connected to the furnace to prevent smoke dispersion in the home.**

9.3 ASH DISPOSAL

Ashes must be placed in a metal container with a tight-fitting lid. The container should be stored outdoors, well away from combustible materials. This container should not contain any other type of waste. If the ashes are meant to be buried, wait until all embers and ashes have thoroughly cooled before burying.

9.4 CREOSOTE BUILD-UP AND REMOVAL

When wood is burned slowly, it produces tar and other organic vapors which, when combined with moisture, form creosote. Creosote vapors will condense in a relatively cool chimney flue. The result is a build-up of creosote residue accumulation on the inside walls of the furnace's flue pipes and heat exchangers.

To reduce the frequency of chimney cleaning, buy or cut your firewood at least one year in advance prior to using it. Store it in a dry and covered place to obtain a minimal moisture rate and to optimize the burn efficiency. Never store wood or combustible materials within installation distances or in the space required for loading wood or ash removal.

When ignited, creosote produces an extremely hot fire inside the chimney.

During the first year of operation, check the chimney and flues regularly for dirt/creosote build-up. Once you've been able to assess the rate at which the system is clogging up, you'll be able to set up a regular cleaning schedule. Depending on the level of use and the type of wood used, a mid-season cleaning may be necessary. Annual cleaning is mandatory. If creosote build-up occurs, immediate cleaning is required to eliminate the risk of fire. Remember that a small, intense fire is preferable to a large smoldering one, to prevent creosote build-up. It's essential to have an emergency plan in case of a chimney fire. What's more, it is especially important to clean heat exchangers and flues thoroughly at the end of the season to prevent corrosion.

9.5 SMOKE DETECTOR

WE STRONGLY RECOMMEND THE USE OF A SMOKE/CARBON DIOXIDE (CO) DETECTOR IN YOUR HOME. IT SHOULD BE INSTALLED AT A MINIMUM DISTANCE OF 15 FEET (4.57 M) FROM THE APPLIANCE TO PREVENT SMOKE ESCAPING DURING LOADING OR IGNITION FROM TRIGGERING THE DETECTOR UNNECESSARILY.

9.6 DOOR GLASS

- To maintain a clean and safe installation, do not build your fire too close to the glass or allow logs to lean on the glass.
- Do not operate your furnace at too low a setting. Keep the air inlet opened long enough during the fire start-up to prevent the fire from smoldering otherwise you risk staining the glass unnecessarily.
- An intense fire will help keep your glass clean itself. However, in the event that your glass gets stained/dirty, which should not occur under normal operating conditions, you will need to clean it using a damp cloth and a glass cleaner for wood burning appliance. Clean the glass **ONLY** when the appliance has cooled down. Do not use abrasive cleaner.

WARNING! AVOID KNOCKING OR SCRATCHING THE GLASS. IT COULD CRACK OR BREAK.

Glass specifications:

- Made of 5/32" (4 mm) thick ceramic glass.
- Do not operate your wood furnace with a broken glass, as this could seriously damage your furnace.
- You can purchase a replacement glass from your Caddy dealer or online at www.caddyfurnaces.com.

9.7 ASH DRAWER

Your furnace is equipped with an ash drawer to collect ashes produced by the combustion of wood. Under no circumstances should the ash drawer be left open during combustion, as this would cause over firing and create an uncontrollable fire, moreover the excess air could cause ash to disperse into the ventilation system.

The drawer must be cleaned weekly. Use an ash vacuum cleaner to remove any ashes around the drawer to avoid the dispersion of ashes in the ventilation system.

It is important that the door, the heat exchanger door, and the ash drawer be kept closed while the appliance is in use. Maintain all gaskets in good condition; in case of deterioration, contact your dealer for a genuine replacement gasket.

9.8 ASH GRATE

You must replace the ash grate if it is damaged. A replacement grate can be purchased from your local dealer or online at www.caddyfurnaces.com.

9.9 ADDITIONAL FRESH AIR SUPPLY

When the furnace and the chimney are completely cold, it may be necessary to provide fresh air by opening a door or a window for a few minutes while lighting the fire. home An airtight or renovated home is prone to lacking the necessary air renewal for the proper operation of a wood-burning appliance.

In such a case, when starting up the fire, avoid operating appliances that evacuate air outside the home, such as:

- Range hood
- Bathroom fan
- Air exchanger
- Ventilated central vacuum system.
- Clothes dryer

Exhaust blowers located in a firewood storage room must be installed so as not to create negative pressure in the room where the furnace is located. A fresh air supply may be necessary to prevent solid fuel units from smoke spill back into the home. The guidelines for determining whether a combustion air supply is required are not suitable for all situations. When in doubt, it is recommended to install a fresh air supply.

A fresh air supply may be needed if:

- Solid fuel units present anomalies, such as irregular draft, smoke spillage, bad combustion, and/or reversed draft (whether there is combustion or not).
- Existing solid fuel units such as a furnaces or fireplaces release odours, heat badly, cause smoke returns, or reversed draft (whether there is combustion or not).
- The opening of a window, even slightly, in calm weather (windless), eliminates each of the above problems.
- The home has an airtight vapor barrier and adjusted windows, and/or is equipped with mechanical devices for evacuating indoor air (air exchangers).
- There is excessive condensation on the windows in winter.
- The home is equipped with a ventilation system.

These or similar symptoms indicate insufficient air supply, therefore fresh combustion air must be supplied. See section ***13.17 FRESH AIR SUPPLY INSTALLATION***

10 FIREWOOD

What is good firewood?

Good firewood is that which has been cut to the correct length for the furnace, split to a range of sizes and stacked in the open until its moisture content is reduced to 15% to 20%.

10.1 TREE SPECIES

The tree species the firewood is produced from is less important than its moisture content. The main difference between tree species is wood density. Hardwoods are denser than softwoods. People living in the coldest regions of North America usually only have spruce, birch, poplar, or other low-density species to burn and yet they can heat their homes successfully.

Homeowners with access to both hardwood and softwood sometimes use both types for different purposes. For example, softer woods make good fuel for relatively mild spring weather and fall because they light quickly and produce less heat. Softwoods are not as dense as hardwoods, so a given volume of softwood contains less energy than hardwood. Using softwoods avoids overheating the home, which can be a common problem with wood heating in mild weather. Harder woods are best for colder winter weather when more heat and longer burn cycles are required.

Note that hardwood trees like oak, maple, ash and beech are slower growing and live longer than softwoods like poplar and birch. This makes hardwood species more valuable. The opinion given that only hardwoods are good to burn is outdated. Old, leaky cast iron furnaces would not hold a fire overnight unless they were fed large pieces of hardwood. This is no longer true. You can successfully heat your home by using the less desirable tree species and give the forests a break at the same time.

10.2 LOG LENGTH

Logs should be cut about 1" (25 mm) shorter than the combustion chamber so they fit in easily. Pieces that are too long make loading the furnace very difficult. The most common standard length of firewood is 16" (406 mm).

The pieces should be of equal length, with a maximum of 1" (25 mm) variation from one to the next.

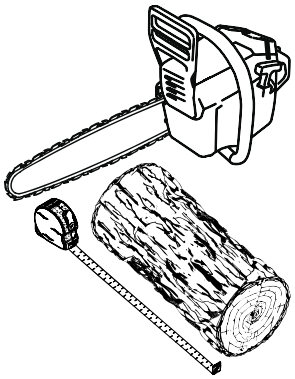

10.3 LOG SIZE

Firewood dries more quickly when it is split. Large logs that are not split can take years to dry sufficiently to burn. Even when dried, unsplit logs are difficult to light because they do not have the sharp edges where the flames first catch. Logs 3" (76 mm) and larger should be split to facilitate drying.

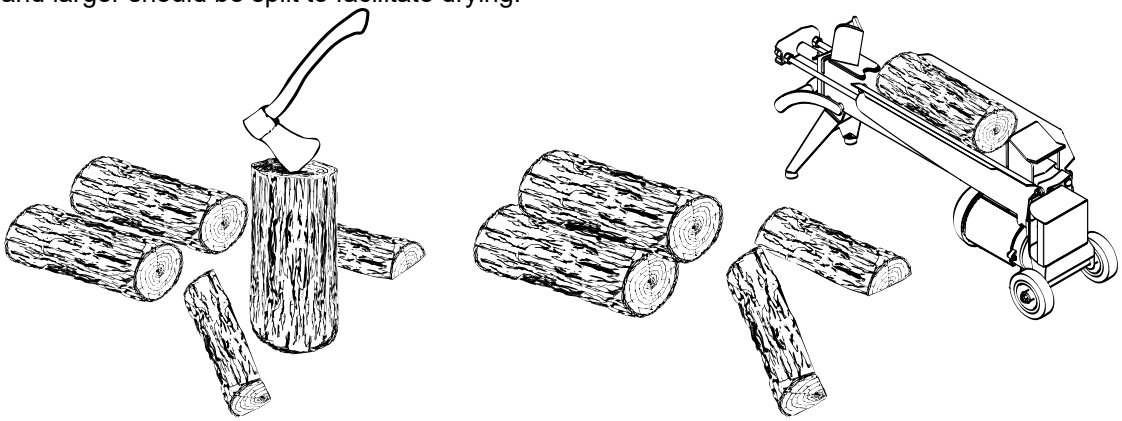

Wood should be split to a range of sizes, from 3" to 6" (76 mm to 152 mm) thick cross sections. Having a range of sizes makes starting and rekindling fires much easier. Often, firewood purchased from commercial suppliers is not split small enough to feed a fire. It is sometimes best to re-split the wood before stacking it to dry.

10.4 HOW TO DRY FIREWOOD?

Firewood that is not dry enough to burn is the cause of most complaints about wood burning appliances. Constant burning of green or unseasoned wood produces more creosote and involves lack of heat and dirty glass door. See section **19** ***FURNACE MAINTENANCE*** for concerns about creosote.

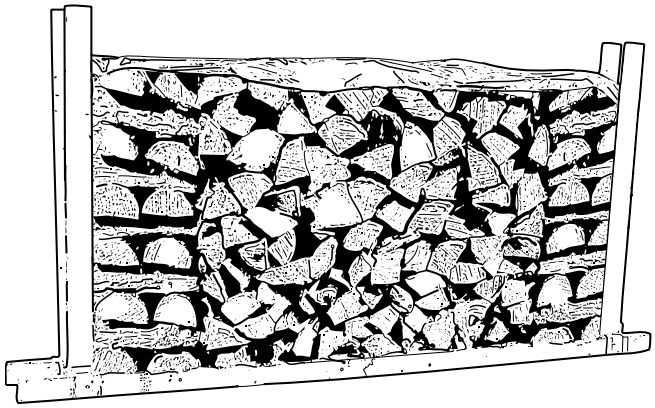

Things to consider in estimating drying time:

- Firewood takes a long time to dry.
- Firewood dries mostly from the exposed ends. Long pieces of wood should be cut to “firewood” length if expected to dry.
- Firewood bought from a vendor is rarely dry enough to burn, so it is advisable to buy the wood in spring and dry it yourself.
- Drying is faster in dry climates than in damp, maritime climates.
- Drying is faster in warm summer weather than in winter weather.
- . Small logs dry faster than large ones.
- Split logs dry faster than round ones.
- Generally, softwoods take less time to dry than hardwoods.
- Softwoods like pine, spruce, and poplar/aspen can be dry enough to burn after being stacked in the open for only the summer months.
- Hardwoods such as oak, maple and ash can take one, or even two years to dry fully, especially if the pieces are large.
- Firewood dries more quickly when stacked in the open where it is exposed to sun and wind; it takes much longer to dry when stacked in a woodshed or mound.
- Ready to burn firewood has a moisture content of 15 to 20% and will allow your furnace to reach its highest possible efficiency.

10.5 FIREWOOD MOISTURE CONTENT

You can tell whether firewood is dry enough to burn by using the following guidelines:

- Use the firewood moisture meter provided with your furnace to confirm that the moisture content is between 15-20%. For a more accurate value, test the middle of a freshly split piece of firewood. Cracks appear at the ends of logs as they dry.
- As wood dries in the sun, it changes color from white or creamy to gray or yellow.
- Knock two pieces of wood together, dry wood sounds hollow and damp wood sounds muffled. Dry wood is much lighter in weight than wet wood.
- Split a piece of wood and if the exposed face feels warm and dry to the touch, it's dry enough to burn; if it's damp to the touch, it's not ready.
- Burn a piece of wood; wet wood will whisper, ooze and sizzle in the fire, dry wood will not.

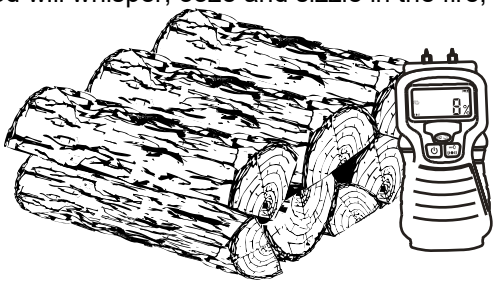

INSTALLATION
AND OPERATION INSTRUCTIONS

CADDY ADVANCED CR SERIAL ADD-ON INSTALLATION PF01021

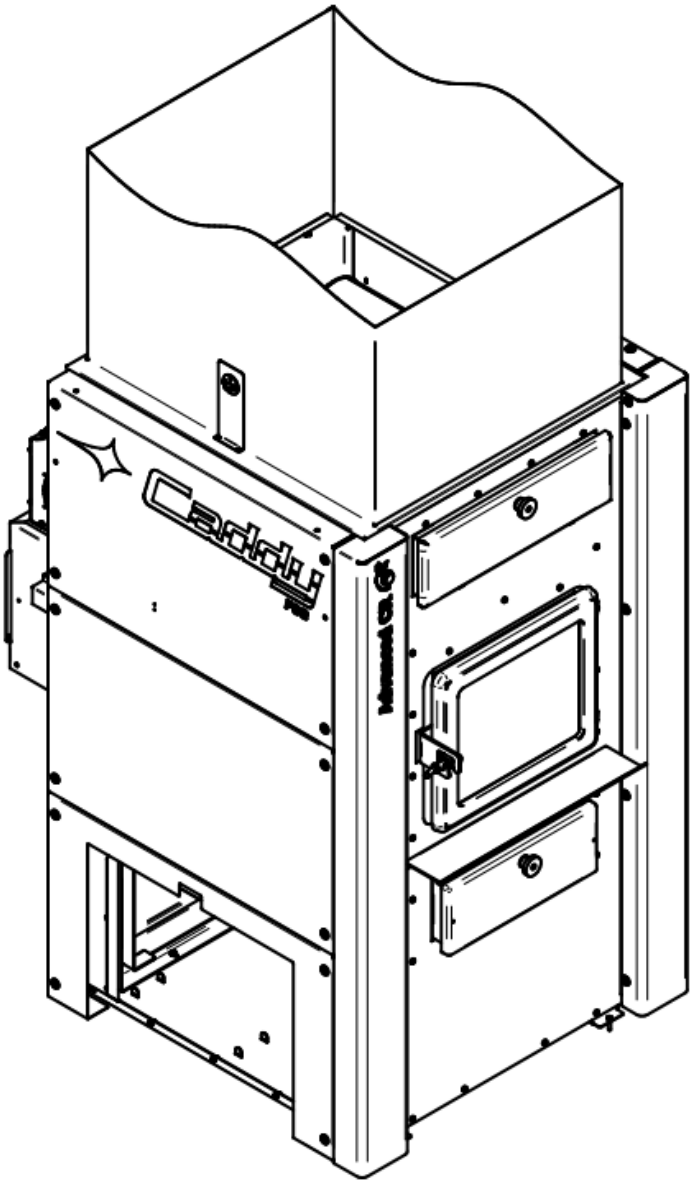

11 SAFETY PRECAUTION

IMPORTANT! THE PROPER OPERATION OF A GAS FURNACE MUST BE VERIFIED BY A LICENSED GAS APPLIANCE INSTALLER RECOGNIZED BY A REGULATORY AGENCY BEFORE AND AFTER INSTALLATION OF THE CADDY ADVANCED CR AS AN ADD-ON.

CAUTION! DO NOT CONNECT TO ANY GAS FURNACE THAT HAS NOT BEEN CERTIFIED INITIALLY AS COMPLYING WITH ANSI Z21.47/CSA-2.3 OR ITS PRECEDENTS.

CAUTION! OPERATE THE ELECTRIC/GAS FURNACE PERIODICALLY TO ENSURE THAT IT WILL OPERATE SATISFACTORYLY WHEN NEEDED.

CAUTION! DO NOT CONNECT TO ANY FURNACE THAT IS NOT EQUIPPED WITH AN AIR-CIRCULATION BLOWER.

12 INTRODUCTION

The Caddy Advanced CR Add-On wood-burning furnace is approved for use in conjunction with an existing oil furnace or any gas or electric furnace with a maximum heating capacity of 120,000 BTU/h. (35.17 kW).

If option PA03060 is not purchased with the furnace, option PA08523 is required for serial add-on installation. Consult the instructions provided for this purpose.

12.1 BLOWER OF THE EXISTING FURNACE

The theoretical air flow in the hot air plenum of the existing furnace blower must be at least 875 CFM when the external static pressure is adjusted to 0,2" and to 0,5" water column.

The external static pressure at the home's warm air duct must be measured before any system modifications are made and must be reset to the same value as the manufacturer's specifications after the add-on procedure has been carried out to maintain air flow through the existing furnace.

Some adjustments to the motor and blower of the existing furnace may be necessary. In this case, the following rules apply:

- On a belt-driven system, blower and motor pulleys may be changed to make the adjustment.
- On a direct-drive system, the motor does not need to be changed; however, the speed of the motor may need to be increased or decreased to make the adjustment.

IMPORTANT! THE EXISTING FURNACE'S BLOWER DOES NOT NEED TO BE CHANGED.

WARNING! THE ELECTRICAL CURRENT FLOWING THROUGH THE BLOWER MOTOR MUST NOT EXCEED THE NAME PLATE POWER RATING.

13 APPLIANCE INSTALLATION

The installation must comply with the requirements of CAN/CSA-B365 and NFPA 211 (United States). If the existing furnace must be modified, the following standards must be respected:

Wood-electric:

- CSA C22.1: Safety Standard for Electrical Installations

Wood-oil:

- CSA B.139: Installation code for oil-burning equipment.
- NFPA 31: Standard for the installation of oil-burning equipment.

Wood-gas:

- CAN/CGA-B149.1 & CAN/CGA-B149.2: Natural Gas & Propane Installation Code et Propane Storage & Handling Code.
- National Fuel Gas Code, ANSI Z223.1/ NFPA 54.

13.1 DUCTING ARRANGEMENT BETWEEN THE TWO FURNACES

This furnace is only approved for installation in the configurations presented in OPTIONS 1, 2, 3 and 4 of this section. The configurations shown in Examples 1 and 2 of this section are prohibited.
Install the plenum and heating ducts in line according to the diagram in **OPTION 1** of this section. Series connection (**OPTION 2**) should be considered ONLY if in line connection (**OPTION 1)** is not possible.

If the ducts are installed in series (**OPTION 2**) and the existing furnace is equipped with a blower limit control is mounted in the plenum, the divider in the plenum must be installed at least 5" (127 mm) above the blower limit control. This divider must be airtight.

OPTIONS 3 & 4 are permitted when the installation of the Caddy Advanced CR furnace is done with an existing furnace whose hot air plenum ducts are downwards flowing (downflow). The Caddy Advanced CR furnace's hot air plenum **must** be ducted above the furnace and cannot be directed downwards (downflow).

WITH AN EXISTING ELECTRIC FURNACE, DO NOT CONNECT TO A DOWNFLOW FURNACE.

Do not connect the ducts in a way that would allow a reversal of the air flow. **(See Examples 1 and 3).**

The transfer duct between the existing furnace (oil, electric or gas) and the add-on must have a minimum surface area of 190 square inches (0.12 m^2) and a minimum inside radius **(R)** of 6" (152 mm). (See **OPTION 1 & 2**).
DO NOT USE DUCT ELBOWS HAVING AN INSIDE RADIUS OF LESS THAN 150 mm (6 in).

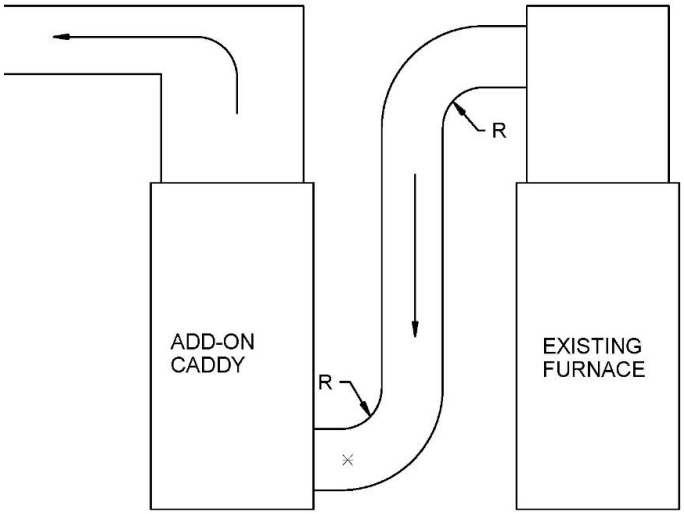

Option 1

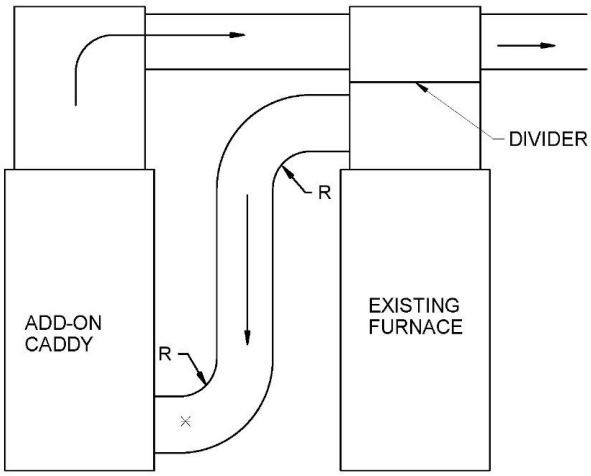

Option 2

***Minimum duct size 190 square inches (0.12 m^2)**
***R = Minimum radius 6 inches**

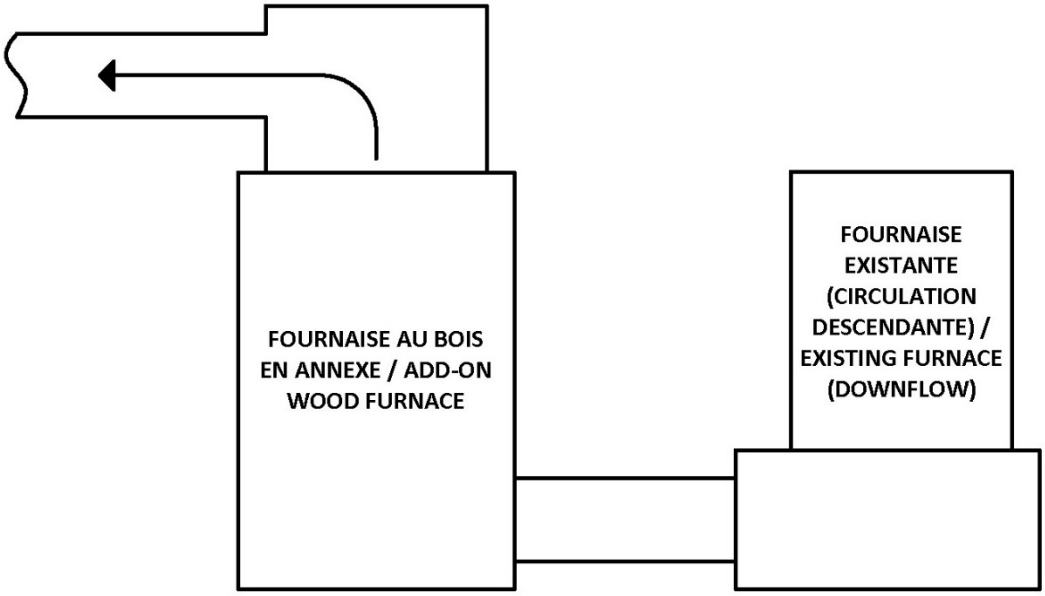

Option 3

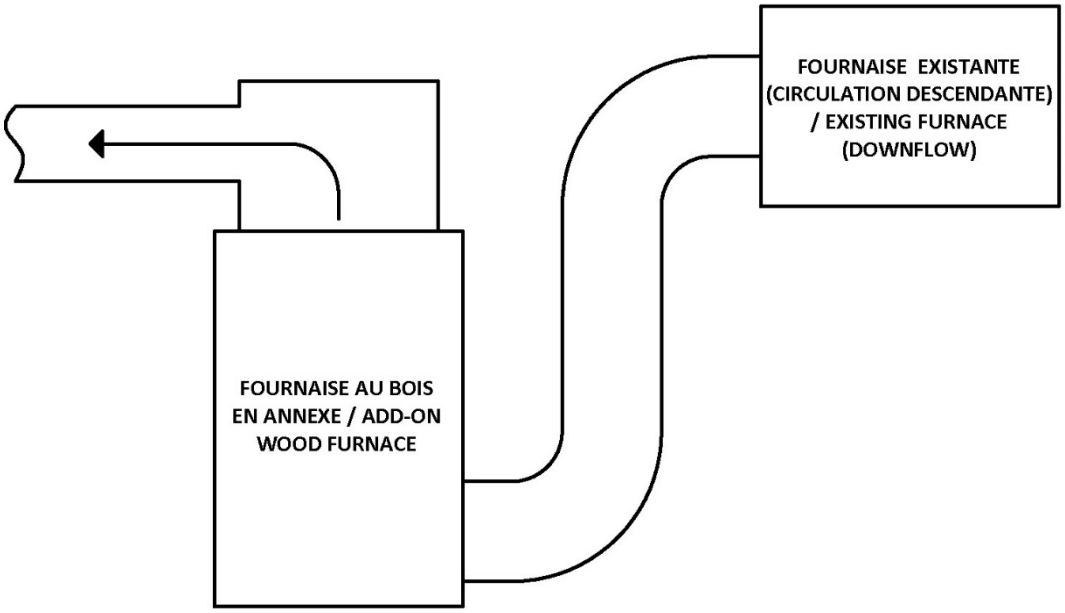

Option 4

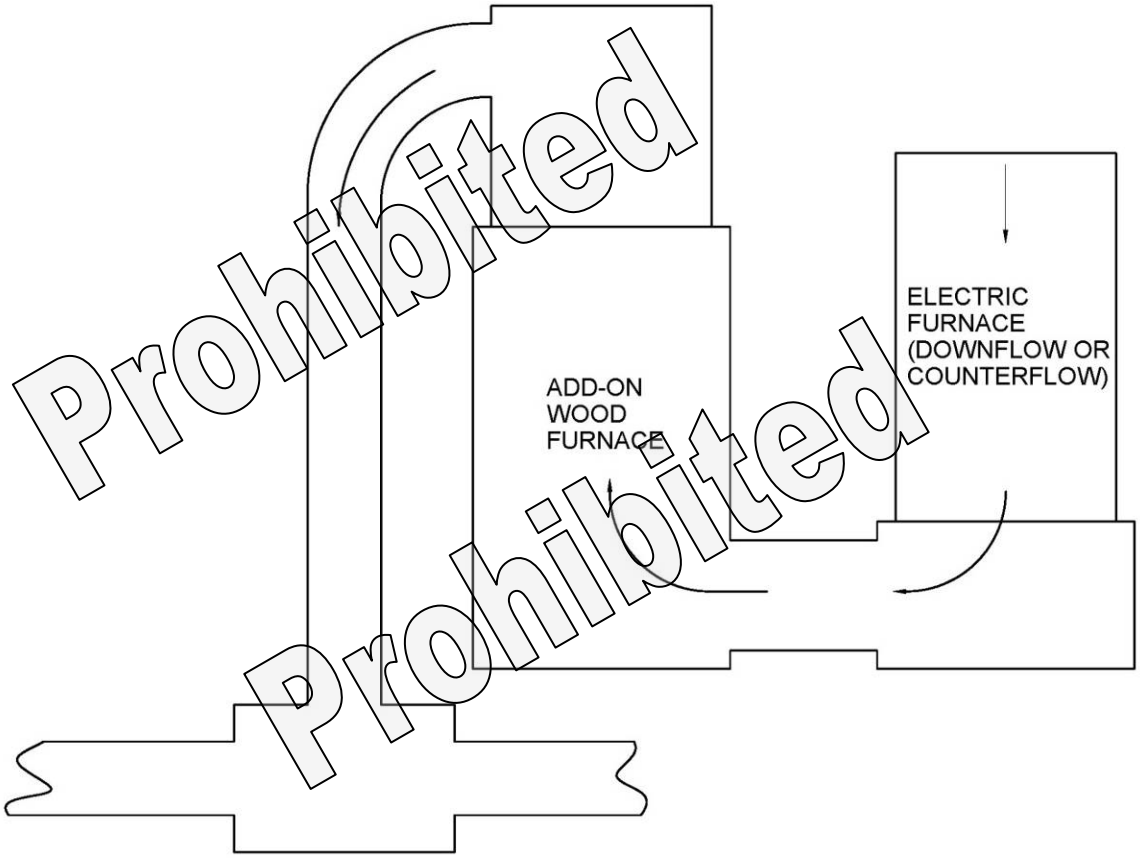

EXAMPLE 1

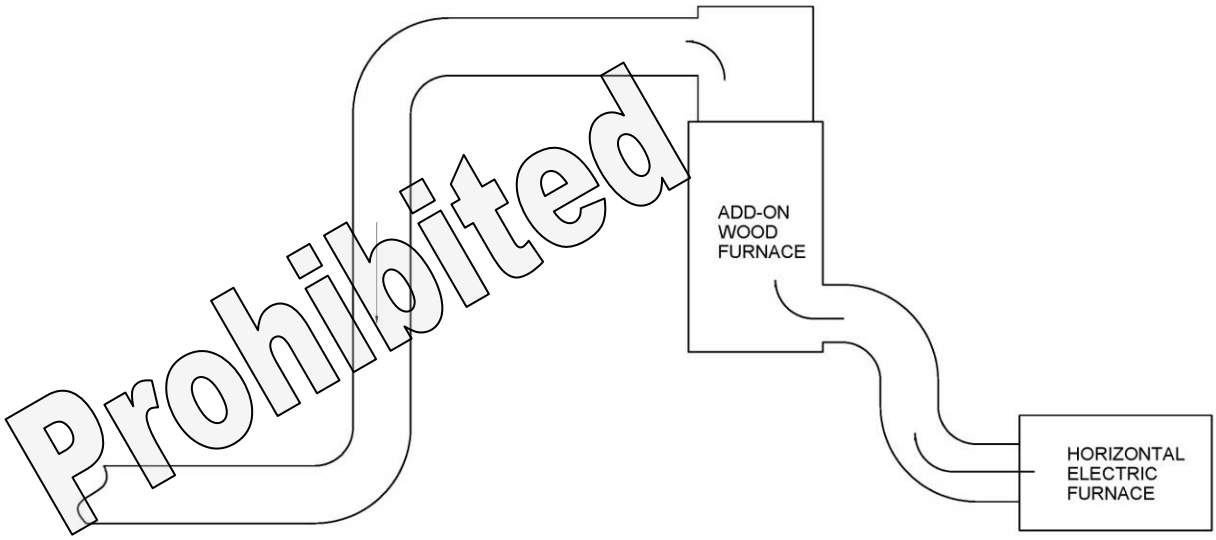

EXAMPLE 2

WARNING! DO NOT REMOVE, RELOCATE OR BYPASS ANY OF THE SAFETY CONTROLS FROM YOUR ORIGINAL FURNACE INSTALLATION.

You must determine the air flow through the existing furnace before installing the Caddy Advanced CR add-on:

1. Run the existing furnace until it reaches normal operating temperature.
2. Using a thermometer, measure the temperature of the cold air return and that of the air exiting the furnace's hot air plenum.

Note: There may be a significant reaction time in the readings of many thermometers available on the market. Give them plenty of time to stabilize when taking temperatures.

The temperature rise across the furnace is determined by subtracting the cold air return temperature from that of the air exiting the hot air plenum. The result (*t*) will be needed for next step.

3. Make the following verifications:

Existing oil, electric or gas furnace:

$$Q = \frac{q}{1.08 \times (T2 - T1)}$$

Q = Flow in cubic feet/min
q = Heat flow in BTU/h
T1= Fresh air return temperature F°
T2= Hot air outlet temperature F°

14 MINIMUM CLEARANCES TO COMBUSTIBLE MATERIALS

The clearances shown in this section have been established on the basis of safety tests under normal and abnormal operating conditions in accordance with the procedures set out in standards CSA B366.1 (Canada) and UL 391 (U.S.A.). Compliance with these clearances is essential to prevent the risk of fire.

This furnace must be installed according to the instructions on the certification plate affixed to the unit.

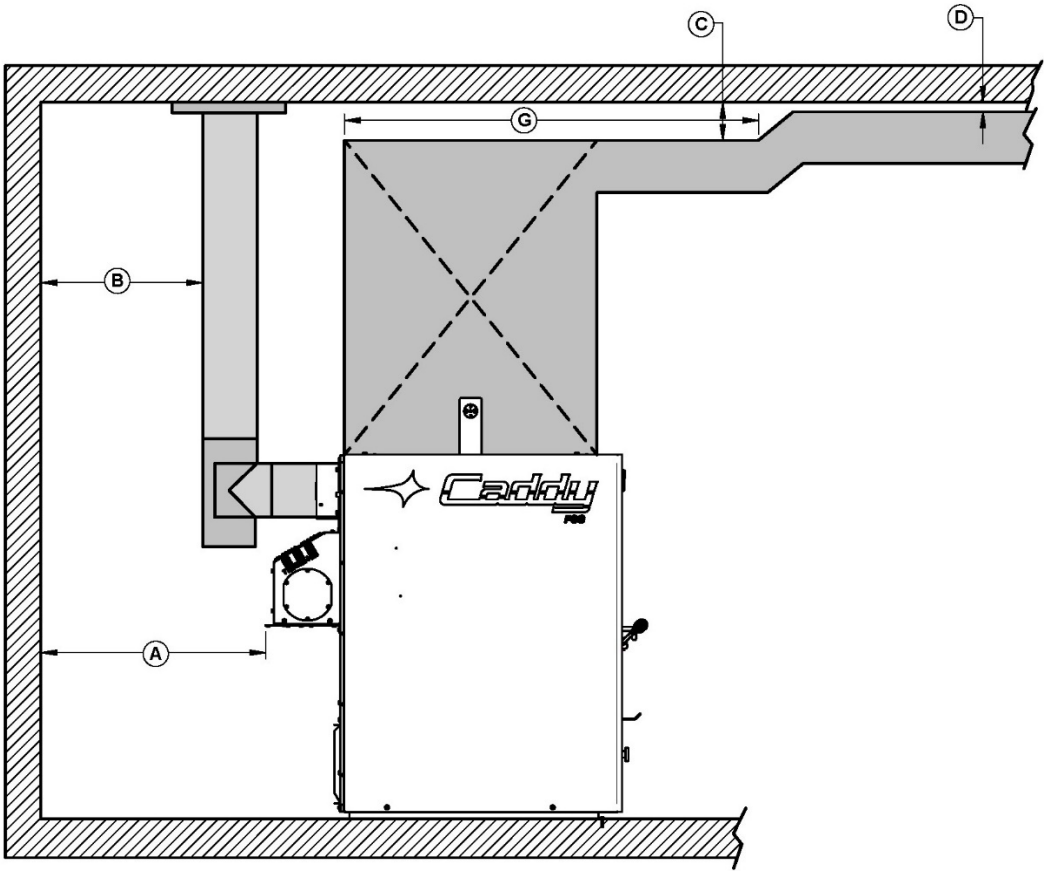

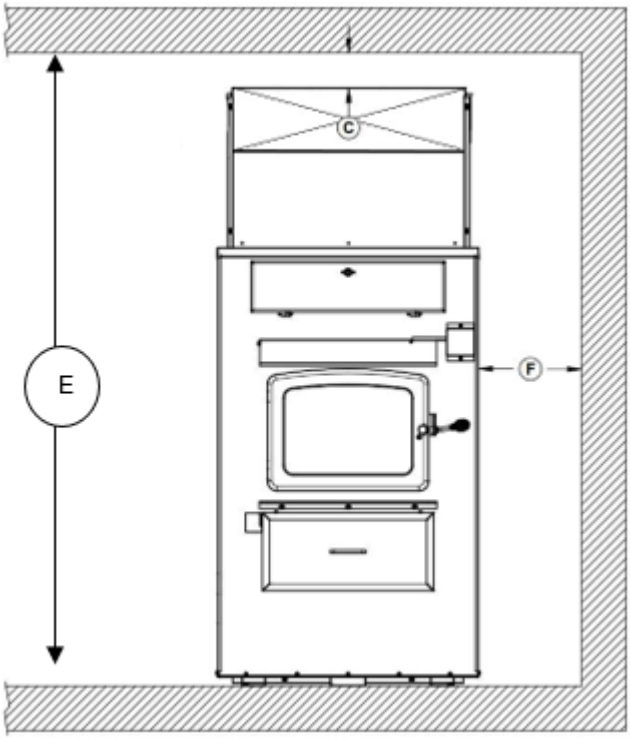

MINIMUM CLEARANCES	
A	24" (610 mm)
B	18" (457 mm)
C	6" (152 mm) for the first 6’ (G)
D	1" (25 mm)
E	80" (203 cm)
F	6" (152 mm)
G	72” (183 cm)

14.1 MINIMUM CLEARANCES TO COMBUSTIBLES MATERIALS FOR AIR RETURN DUCT

The return air duct should be at least equal in size to the return air plenum. The return air duct can be installed at a 7” clearance to combustible materials.

14.2 MINIMUM CLEARANCES TO COMBUSTIBLES MATERIALS FOR HOT AIR DUCTING

Plenums and ducting installed on the furnace must be made of metal in accordance with NFPA 90B, 2-1.3. When a side wall is located less than 6 feet from the furnace, the hot air duct can pass through it with a clearance of six (6) inches around it. For a wall located more than 6 feet away, the clearances can then be reduced to 1 inch.

14.3 FLOOR PROTECTION

- If the floor is made of non-combustible materials (like concrete), no floor protection is required.
- If the floor is made of combustible materials, a non-combustible floor protection is required (see table below).

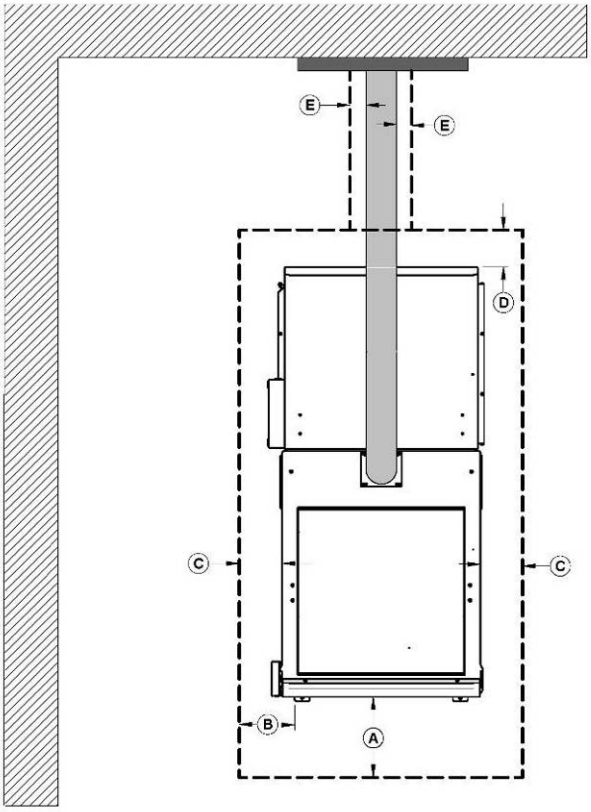

	FLOOR PROTECTION*	
	CANADA	**USA**
A	18" (457 mm) From door opening	16" (406 mm) From door opening
B	N/A (USA only)	8" (203 mm) From door opening
C	8" (203 mm)	N/A (Canada only)
D	8" (203 mm) - Note 1	N/A (Canada only)
E	N/A (USA only)	Note 2

**Steel with a minimum thickness of 0.015" (0.38 mm) or ceramic tiles sealed together with grout. No protection is required if the unit is installed on a non-combustible surface (e.g. concrete floor).*

***Note 1**: The floor protection at the back of the furnace is limited to the furnace’s required clearance (A) if such clearance is smaller than 8 inches (203 mm).*

***Note 2**: Only required under the horizontal section of the connector. Must exceed each side of the connector pipe by at least 2 inches (51 mm).*

14.4 INSTALLING THE AIR SUPPLY DUCT FROM THE EXISTING FURNACE

To connect the air intake of the existing furnace to the CADDY ADVANCED CR SERIAL ADD-ON furnace, 2 choices are offered for connecting the furnace duct. At the back of the furnace, to adapter **A** (9" x21"). Or, on the side with adapter **B** (14" x 19 1/4"), supplied with the **PA03060** serial add-on conversion kit.

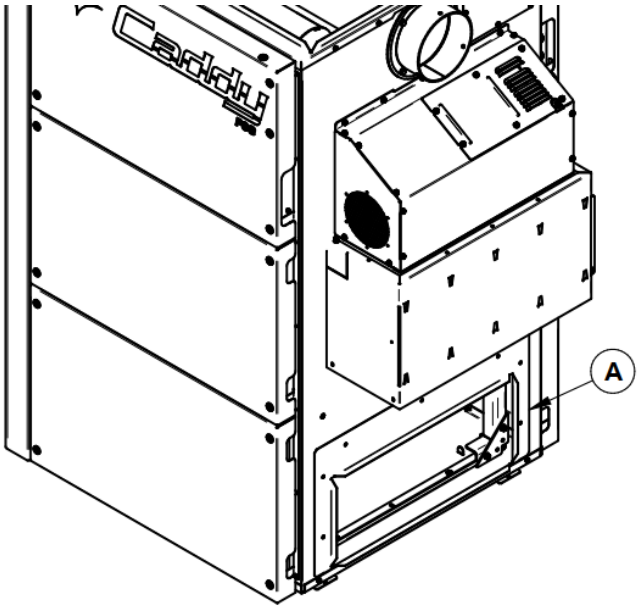

Rear connection

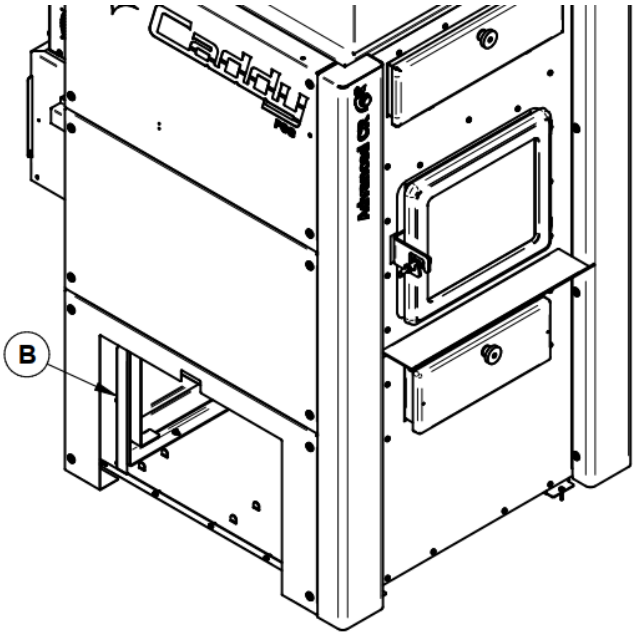

Side connection (with PA03060)

14.5 PIPE CONNECTOR

The Caddy Advanced CR Add-on furnace must be connected to a smoke and chimney system that are in good condition and suitable for wood burning. The use of 6" connecting pipe and chimney is recommended. **It is strictly forbidden to connect a solid fuel burning appliance to a chimney already connected to a propane or natural gas appliance. Regulation CAN/CSA B365.17**

WARNING! DO NOT INSTALL A MANUAL DAMPER.

14.6 ELECTRICAL CONNECTION SERIAL FURNACE

To use the serial Add-on configuration, the wiring kit **(PA08523 – sold separately)** is required. The installation instructions are provided with the wiring kit. To connect the furnace as a serial add-on, the furnace connection kit **(PA08523 - sold separately)** is required. Installation instructions are supplied with the connection kit.

14.7 INSTALLATION INSTRUCTIONS

- ✓ Installation must be made in compliance with the CSA B.365 standard « Installation code for solid-fuel-burning appliances and equipment » in Canada and NFPA 90B « Standard for the installation of warm air heating and air conditioning system » in the United States. In addition, for all electrical connections, the Canadian standard CSA C22.1 « Canadian electrical code » and in the United-States NFPA 70 standard « National Electrical Code » must be followed.
- ✓ All controls must be adjusted by a qualified technician. Adjustment of controls and blower speed must comply to CMMTQ recommendations and the Warm Air Heating and Air Conditioning National Association and should respect the static pressure ranges in the warm air plenum of the furnace.
- ✓ We recommend that our woodburning appliances be installed and serviced by professionals who are certified in the United States by NFI (National Fireplace Institute®) or in Canada by WETT (Wood Energy Technology Transfer) or in Quebec by APC (Association des Professionnels du Chauffage).
- ✓ Inspect the furnace to ensure that it has not been damaged during transit. Remove the components and instruction manual from the combustion chamber and the tools from the furnace exhaust pipes.
- ✓ The installation instructions in this section apply only to the Caddy Advanced CR wood serial add-on standard for Canada.

WARNING! ONLY USE WIRES SUITABLE FOR 167 °F (75 °C) OR MORE.

14.8 HOT AIR PLENUM TEMPERATURE PROBE INSTALLATION AND CONNECTION (RTD)

On the Caddy Advanced CR, a temperature probe (RTD) must be installed on the left-hand side of the furnace using the bracket provided with the unit. The RTD is a probe that reads the temperature within the hot air plenum and is essential

to the proper operation of the unit. It is important that the RTD and the RTD support be properly secured to the hot air plenum and furnace.

STEP 1: Secure the RTD bracket **(A)** with two screws **(B)** found in the owner's manual kit.

STEP 2: Using a drill and a 9/32" bit, drill a hole in the hot air plenum so that the RTD probe can fit into the hole.

STEP 3 & 4: Secure the RTD in place, on the hot air plenum, using the two self-drilling screws provided with the owner's manual.

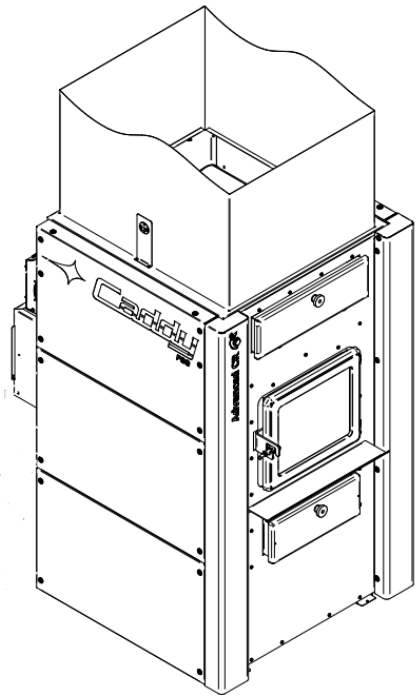

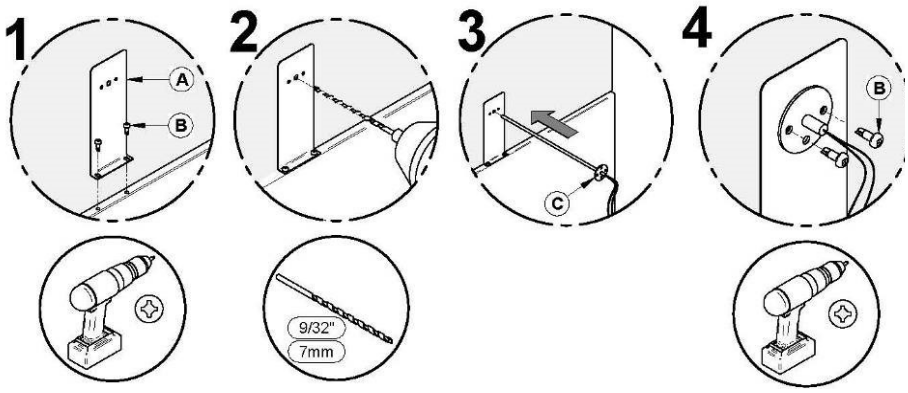

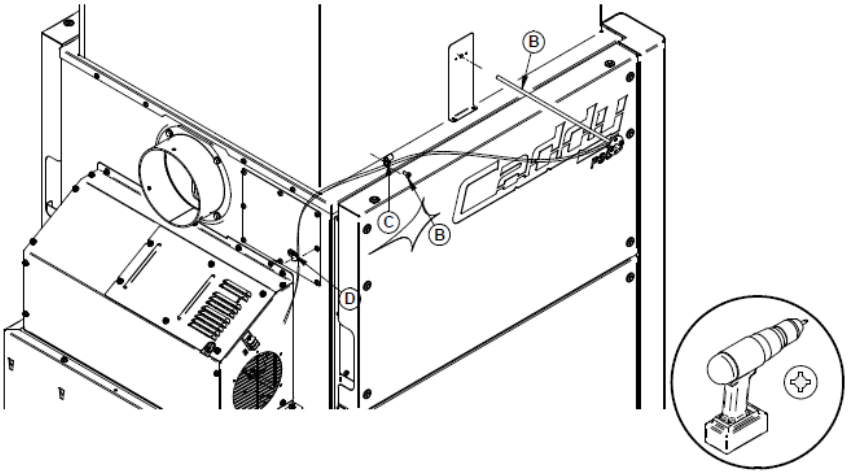

STEP 5: Connect the RTD probe **(B)** to the furnace terminal block marked **"R"**.

STEP 6: Use the grommets **(C)** supplied with manual to attach the wires from the RTD to th furnace.

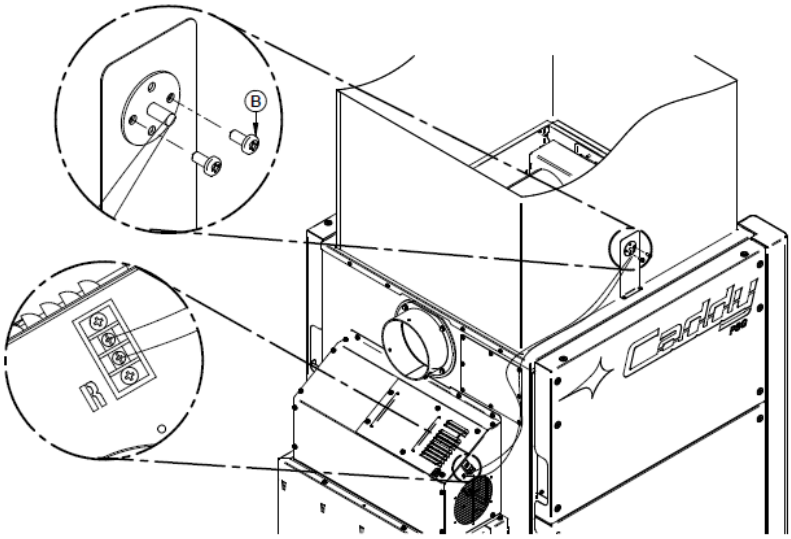

14.9 UNIT LOCATION

- ✓ For a safe, quiet, and efficient operation, the furnace must be leveled in both directions and evenly supported to ensure stability.
- ✓ The furnace must be installed in a location where there is an adequate supply of secondary air.
- ✓ To support combustion. In airtight homes, it may be necessary to install an outside air intake. See section **9.9 ADDITIONAL FRESH AIR SUPPLY** and **1.17.**
- ✓ The furnace should be positioned so that the connector pipe is as short as possible, to eliminate the need for 90-degree elbows.

It is the owner's responsibility to ensure that the unit is properly installed to allow for safe operation.

14.10 FURNACE PIPE CONNECTION

Before connecting the furnace pipe, make sure to remove accessories such as the scraper, shovel, and poker from the furnace exhaust pipe and/or heat exchangers.

The Caddy Advanced CR furnace is equipped with a 6" diameter flue that can be installed to a 6" chimney approved for solid fuel appliances (2100°F). If the draft exceeds 0.06 IN. W.C., a barometric damper must be installed (See Draft Damper). Never install a manual chimney damper.

Best practices and installation code requirements:

- Recommended inner diameter: 6" (152 mm).
- If an increaser must be used (max 6" (152 mm) to 7" (178 mm)), it must be installed as close as possible to the chimney.
- All furnace pipe joints must be secured with three screws. Failure to secure them to each other may allow for separation, leaks, and possible fire.
- A minimum upward slope of 1/4" per foot (20 mm/m) must be maintained on the horizontal portion of the furnace pipe.
- Make sure that each screw penetrates the inner wall of both connectors (male and female). See pictures below showing a male/female coupling. See pictures below showing a male-female coupling.

PROPER INSTALLATION

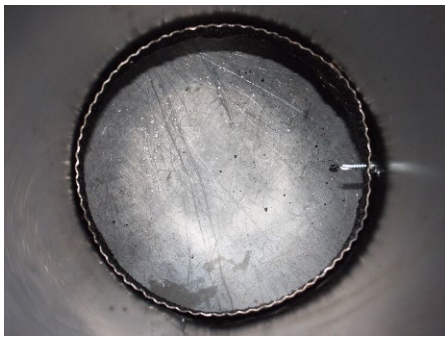

IMPROPER INSTALLATION

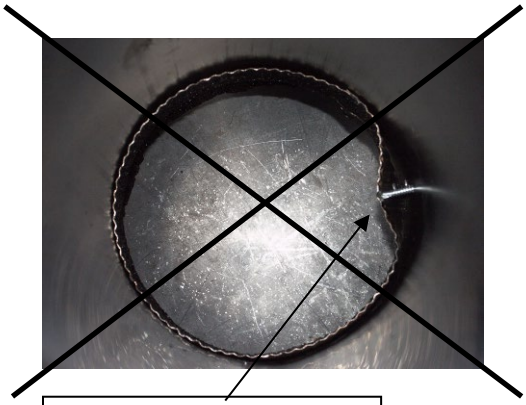

CAUSES RESTRICTION

- A straight flue installation offers the least restriction to smoke evacuation and results in stronger draft. Straight installations also require less maintenance as there are no corners where creosote can settle.
- The use of 45° elbows is strongly recommended.
- Never use more than two 90° elbows.

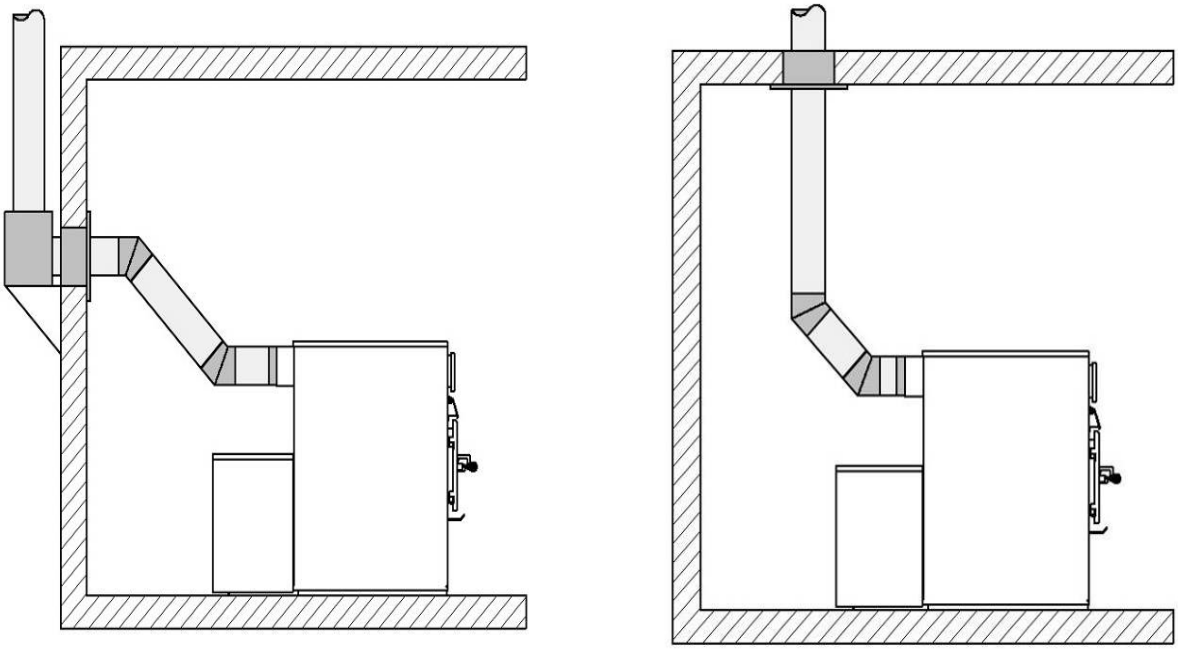

Use 45° elbows where possible, rather than 90° elbows.

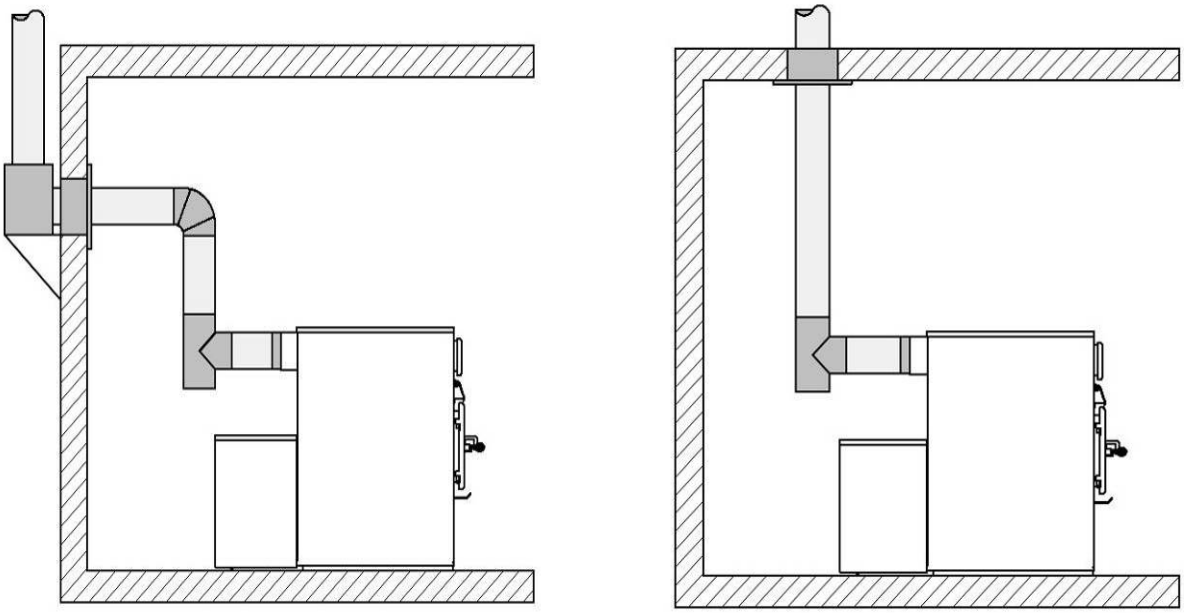

Alternative installations with 90° elbow or tee.

14.11 ELECTRICAL WIRING

- ✓ **The following instructions do not replace those of your local code.**
- ✓ **Installation and verification of this appliance must be done by a qualified technician/electrician.**
- ✓ **The furnace is fully assembled at the factory and no electrical connection is required other than plugging the power cord into an electrical outlet, connecting the RTD and thermostat.**

ALL WIRING FROM THE SERVICE PANEL TO THE HEATING UNIT MUST COMPLY WITH CURRENT ELECTRICAL CODES AND ALL LOCAL REGULATIONS. IT IS RECOMMENDED TO SUPPLY THE FURNACE WITH ITS OWN 120-VOLT POWER ON A DEDICATED 15 AMP CIRCUIT BREAKER (SEE WIRING DIAGRAM).

14.12 DRAFT REQUIREMENTS

If the draft exceeds 0.06 INW.C., a barometric damper must be installed. The barometric damper must be adjusted so that the **maximum draft** measured at the furnace outlet is limited to **0.06 IN.W.C**. On the other hand**, the minimum** draft to be respected is **0.04 IN.W.C**

The draft measurement is taken in the exhaust pipe 18" (457 mm) above the furnace's flue collar using a tube and a pressure gauge (manometer).

- **Poor draft**: **-0.03" W.C. (7.5 Pa) and under**:
  - ✓ Ignition problems, risk of smoke spillage, poor heat exchanger performance.
- **Ideal draft**: **from -0.04" to -0.06" W.C. (10 to 15 Pa)**:
  - ✓ For optimum furnace performance
  - ✓ A barometric draft control is not required.
- **Excessive draft**: **-0.08" W.C. (20 Pa)**: **WARNING!**
  - ✓ This leads to premature wear of the furnace, a situation which is not covered by warranty.
  - ✓ A draft greater than -0.08" W.C. (20 Pa) leads to an uncontrollable fire even if the air control is in closed position.
  - ✓ The furnace's self-regulating control system reduces the risk of excessive draft. If necessary, a barometric control damper should be installed to control excessive draft. It should be adjusted to limit the maximum draft to -0.06 IN. W.C. (15 Pa).

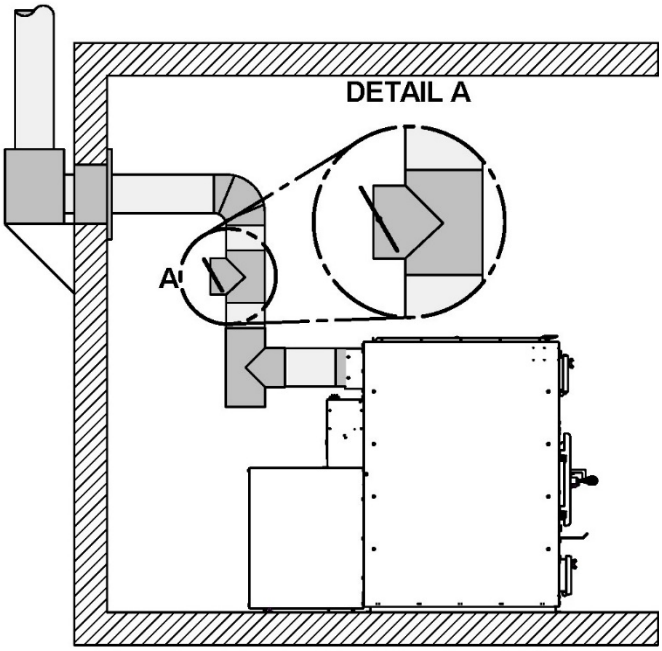

14.13 FRESH AIR SUPPLY INSTALLATION

Fresh combustion air may be supplied in the following ways, provided they comply CSA B365, chapter 5 and NFPA 211.

Direct combustion air supply:

- Appliances may only be connected directly to a fresh combustion air source if they are certified for this type of installation, which must comply with the manufacturer's instructions.
- The Caddy Advanced CR features a fresh-air intake system that has been tested and certified.
- The fresh air supply adapter can be installed on either the left or right side of the furnace, depending on the installation which meets requirements best.

Components provided with the furnace for the installation of a fresh air supply.

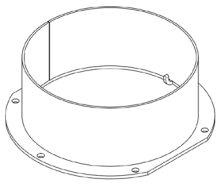

1x fresh air supply adapter 5" (13 mm) **(A)**

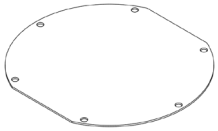

1x fresh air cover **(B)**

12x type A #10 black screws **(C)**

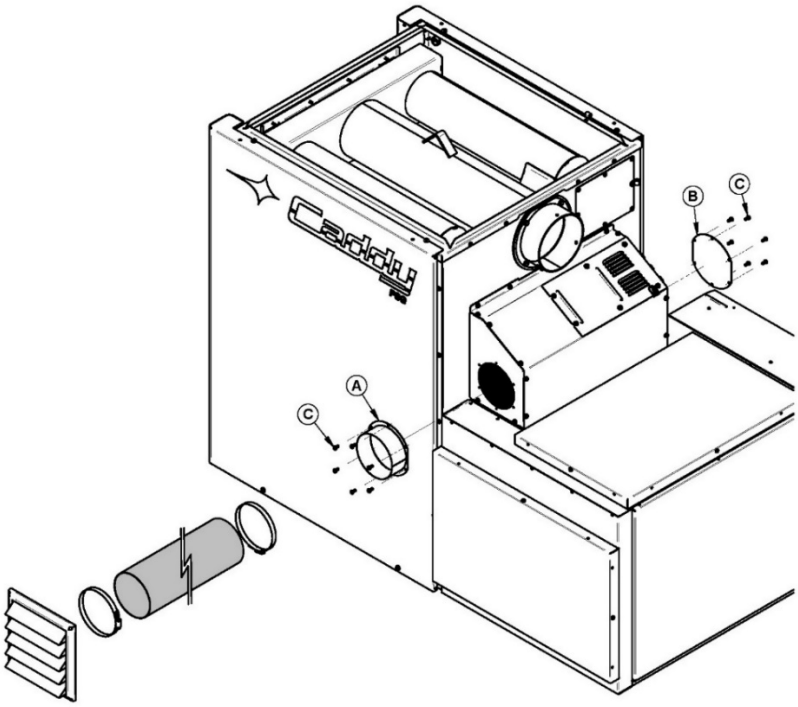

Indirect fresh air supply:

- New combustion air can be supplied using an insulated pipe located no more than 12" (305 mm) from the unit so as not to interfere with its operation.
- The recommended diameter for the fresh air intake pipe is 5" (127 mm).
- Mechanical ventilation system: if the home is equipped with a ventilation system (air exchanger or heat recovery), the ventilation system may be able to supply sufficient fresh air to the furnace. Otherwise, the homeowners should be aware that the ventilation system may need to be rebalanced by a ventilation technician after the furnace has been installed.

Do not use a barometric draft control when a fresh air intake system is installed.

14.14 TOOL HOLDER INSTALLATION

The furnace comes with a tool holder which can be installed on a wall or beam close to the furnace. The components provided with the furnace are:

1x tool holder **(A)**
PL66268

1x shovel **(B)**
PL48171

1x poker **(C)**
PL48173

1x scraper **(D)**
PL48170

1. Securely fasten the tool holder with the help of two screws.

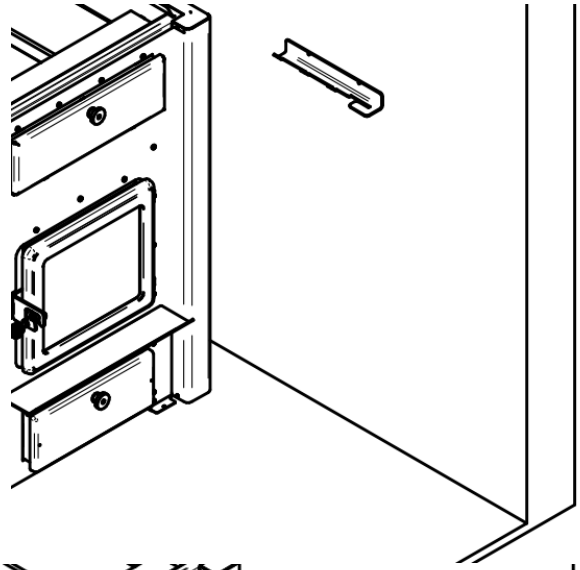

2. Install tools on holder.

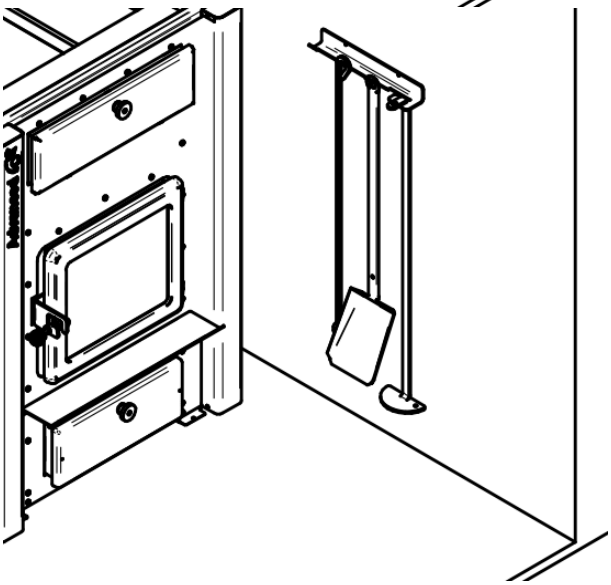

14.15 HOT AIR PLENUM

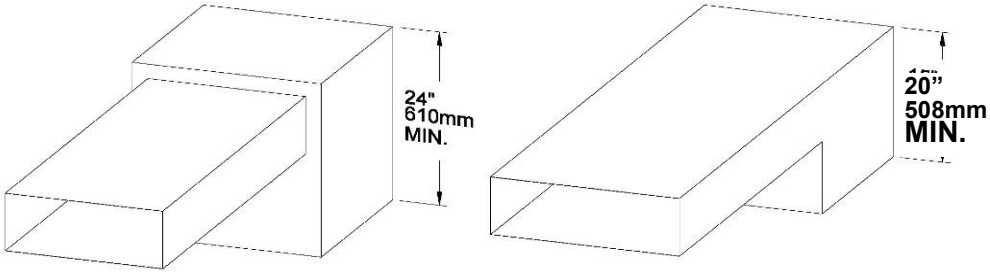

The hot air plenum exiting the furnace must have a minimum height of 24" (610 mm) if the top of the first vertical section is not flush with the first horizontal section. Otherwise, the minimum height is 20" (508mm). These dimensions, for all hot air furnaces, meet the requirements of standards CSA B140.4 and UL 391.

To ensure adequate static pressure, the system should be designed so that the cold air return volume is at least equal or slightly greater than the volume of warm air distributed.

The warm-air supply outlet of the additional furnace must not be connected to the cold-air return inlet of the existing furnace. The reason being is there exists a risk of overheating the components of the existing furnace and causing it to operate improperly.

The warm-air supply-duct system must be constructed of materials with a minimum operating temperature rating of 250°F.

15 HEATPUMP / AIR CLIMATIZATION INSTALLATION

WARNING: In a heat pump system, it is mandatory to add an auxiliary heating (electric or gas). If this instruction was not followed, PSG will not cover any damage under warranty.
WARNING: It is important to install a drain in the ducting where the cooling coil is to evacuate correctly water from condensation.

It is allowed to install a heat pump or air conditioning system with the CADDY ADVANCED CR. The maximum cooling capacity is of **2.5 tons**. The accessories PA03060: CONTROL UNIT AND OPTIONAL ADD-ON MODULES and PA08591: THE HEATPUMP HARNESS must be installed with the furnace and heat pump or AC coil to work properly. The preferred setup is to install the cooling coil in a bypass ducting with dampers. See following image:

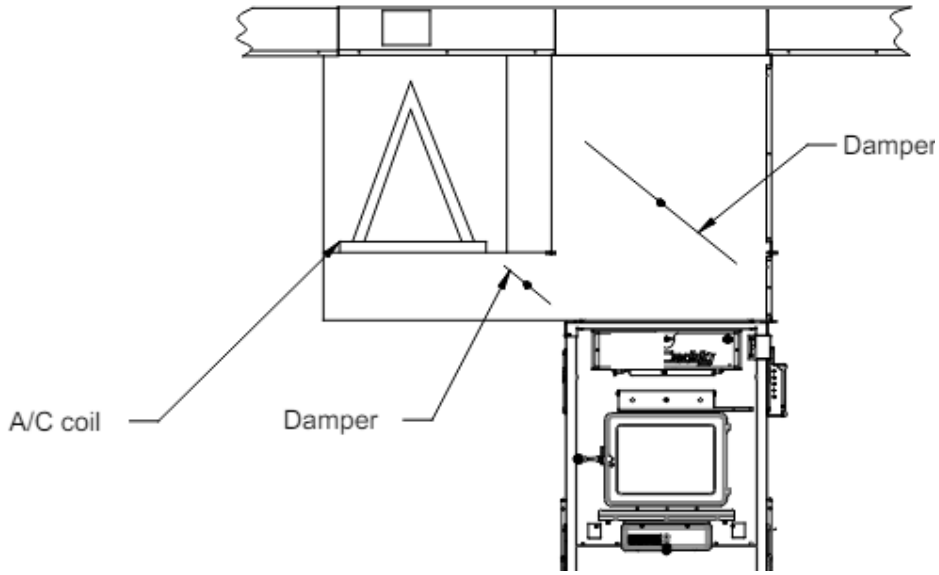

An installation of the cooling coil in the cold air return is allowed, see following image. However, this configuration could lead to the appearance of rust due to condensation forming in the furnace. This rust is not covered by the warranty. Refer to the warranty statement at the end of the manual for more information. The heat pump coil must be in the air handler. It is forbidden to install a heat pump coil in the air return with an electrical element PA01106.

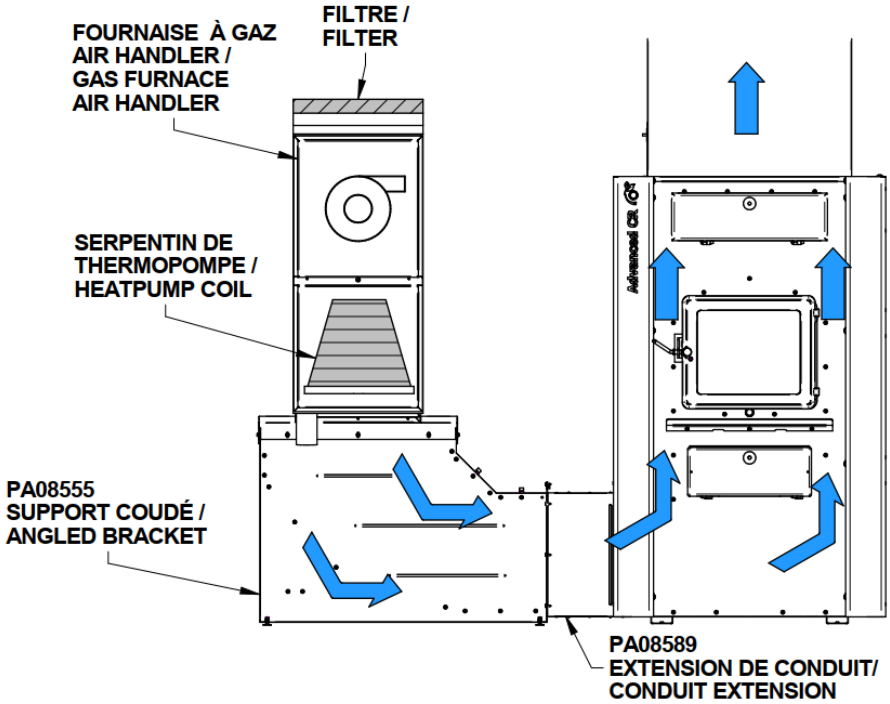

For additional information about the installation of the heat pump with the furnace, refer to the manual of the PA03060 (46370) and PA08591 (46367).

16 GAS FURNACE INSTALLATION

The CADDY ADVANCED CR furnace can be connected in series with a high-efficiency gas furnace. The recommended brands and models of gas furnaces to pair with the CADDY ADVANCED CR furnace can be found in the PA03060 instruction manual (46370), which includes the control module and optional complementary units. Installation instructions with a gas furnace are also included.

Several options can be paired with the gas furnace to facilitate its installation but the **wiring kit for add-on PA08523 stays mandatory.**

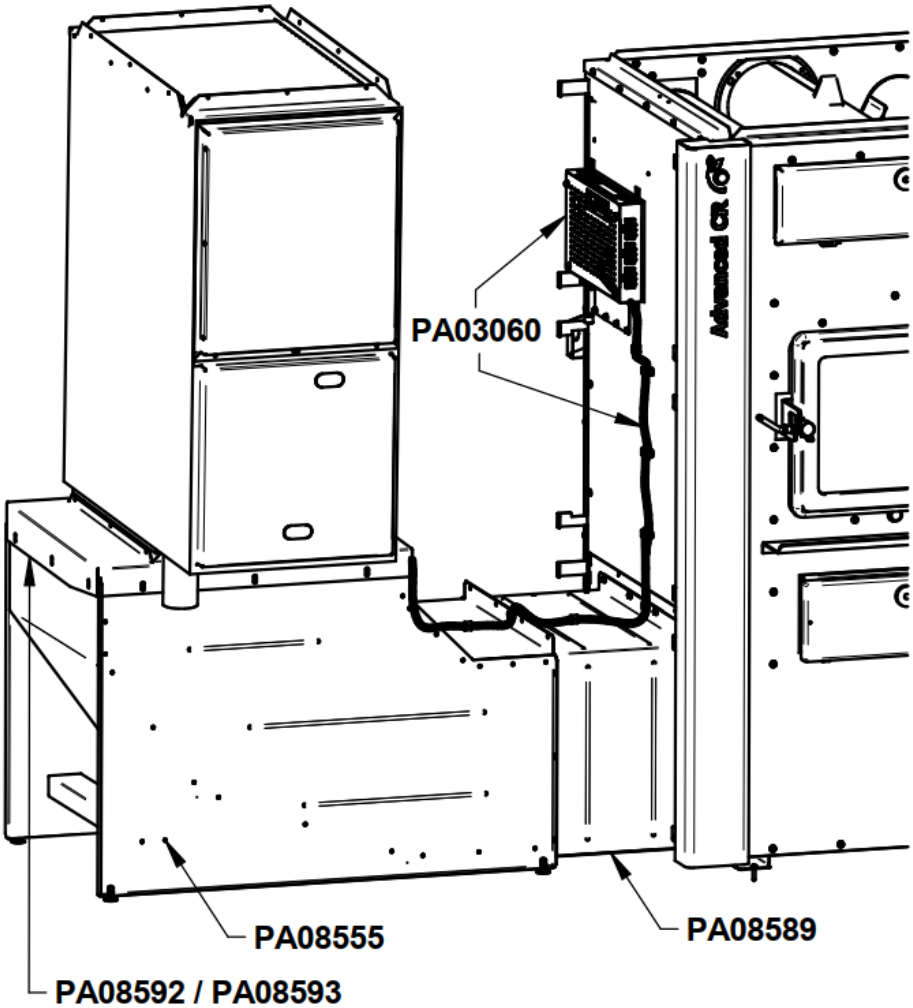

**** Note that the gas furnace can also be installed on the right side of the furnace."*

Option	Description
PA03060	Control unit and optional add-on modules
PA08555	Elbow support
PA08589	Elbow support extension
PA08592	Connexion plate for Dettson gas furnace
PA08593	Connexion plate for Napoleon and Continental furnace
PA08523	**Wiring kit for furnace installed in add-on**

17 THERMOSTAT INSTALLATION

In the case of an installation with a **PA03060** serial add-on kit. Refer to its respective flyer to see the different scenarios for thermostat connection.

17.1 SERIAL ADD-ON ONLY

The furnace must be wired to a thermostat. You can use the one provided with the unit or use one already installed in your home. The thermostat must be installed on an inside wall and located where it will be less affected by drafts coming from an air outlet. It must be installed at a minimum of 55 inches (140 cm) above the floor.

Thermostat use helps maintain a constant temperature throughout the home. A fixed wall mounted 24v thermostat is required.

Note: Thermostat manufacturer's instructions always take precedence over the information published in the following section.

Thermostat location

- Must be installed on an inside wall of the home.
- In a place where it will be least affected by air currents from a warm air outlet or cold outside walls.
- Must be installed at a minimum of 55" (140 cm) above the floor.
- Must be installed at a minimum of 15' (4.57 m) from the furnace and must not receive radiating heat from the glass door.

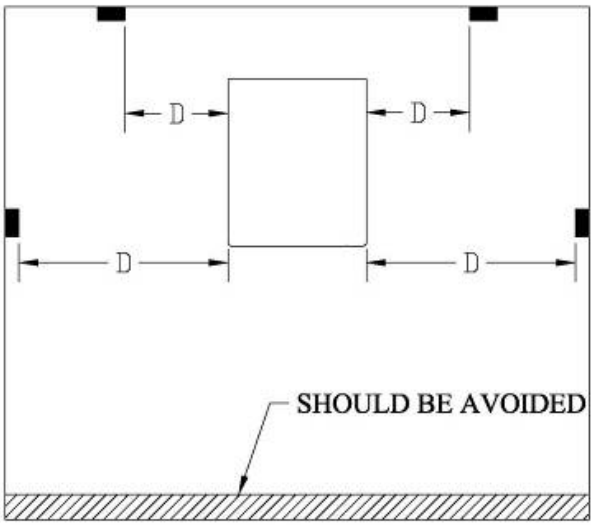

D = MINIMUM DISTANCE 15 FEET

Thermostat wiring

For connection to the thermostat, refer to the instructions for accessories **PA03060**, connection of a furnace as a serial add-on, for the different scenarios.

24V Thermostat wiring

- Before installing the thermostat unplug the furnace from the electrical outlet.
- Use a minimum of 4-strand 18 AWG thermostat wire.
- Strip and crimp 2 of the wires with 1/4" female insulated connectors **(typically R and C wires)**.

- Remove the right-hand side from the air inlet box

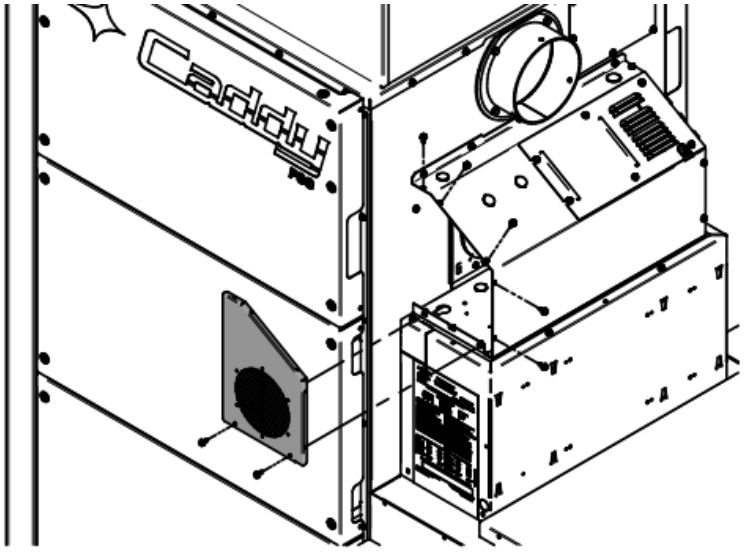

- Remove the knockout from the air intake cover and fit a grommet (found in the furnace manual kit) See DETAIL

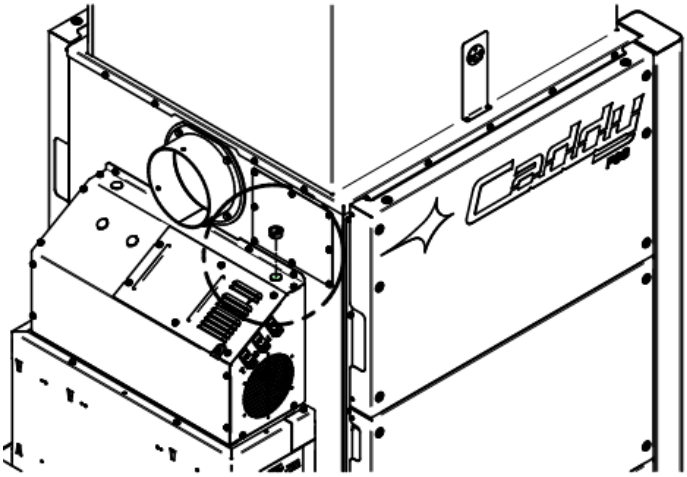

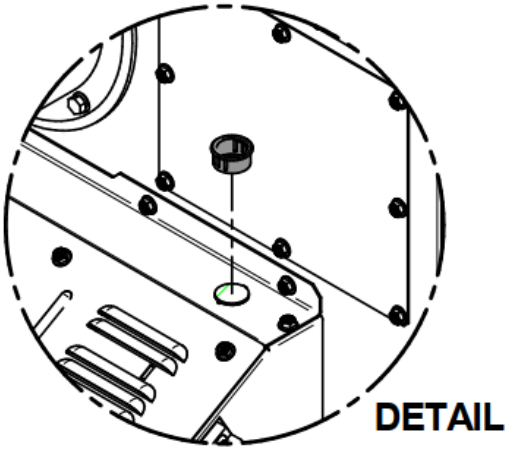

- Pass the 2 crimped wires through the grommet and connect them to the transformer.
- Strip the other end of the 2 wires and connect them to the thermostat's **"C"** and **"R"** terminals.

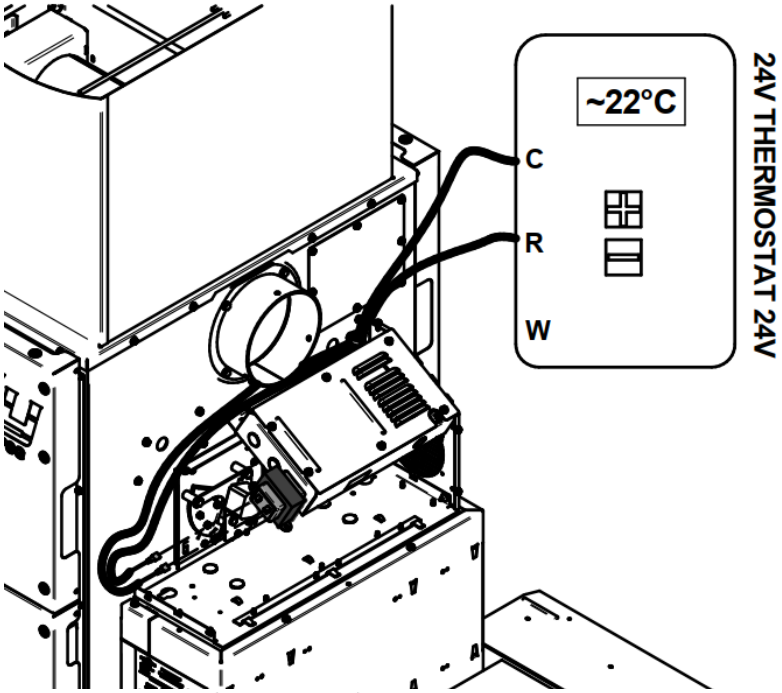

- The terminal block is located at the rear of the furnace on the left-hand side as you face it and is marked with the letter **T**.
- Loosen the two screws in the middle of the terminal block and insert the remaining 2 wires **(typically R and W)** under each screw. Tighten the screws.
- Open the thermostat housing and connect the wires according to the manufacturer's instructions.
- Put back the right-hand side (when facing) of the air inlet box

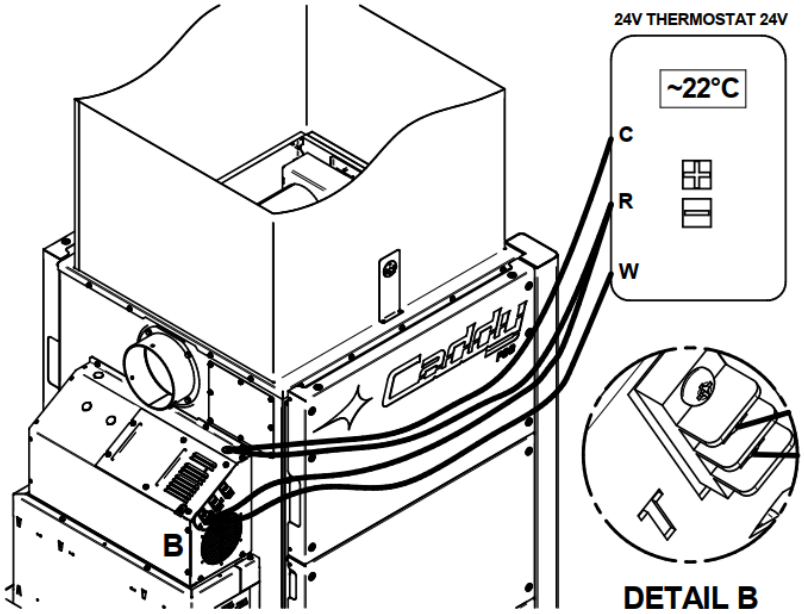

Battery-operated thermostat wiring

Before installing the thermostat, disconnect the furnace from the power supply.

- Use 2-strand 18 AWG thermostat wire.
- The terminal block is located at the rear of the furnace on the left-hand side and is marked with the letter **T**.
- Loosen the two screws in the middle of the terminal block and insert the remaining 2 wires under each screw. Now tighten both screws.
- Open the thermostat housing and connect the wires according to the manufacturer's instructions. (Generally, **R(h)** and **W** on the thermostat)

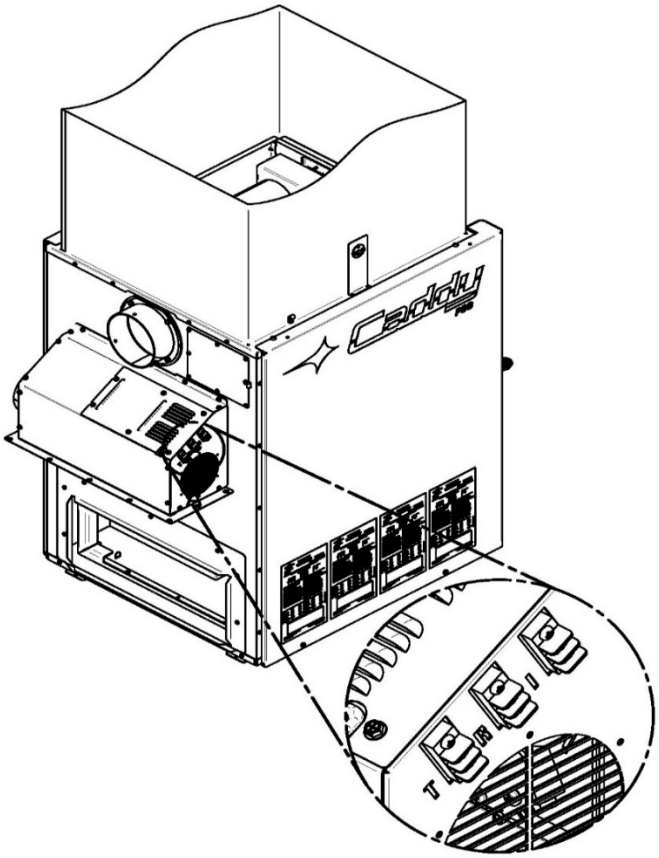

Here is an example of how to connect a thermostat:

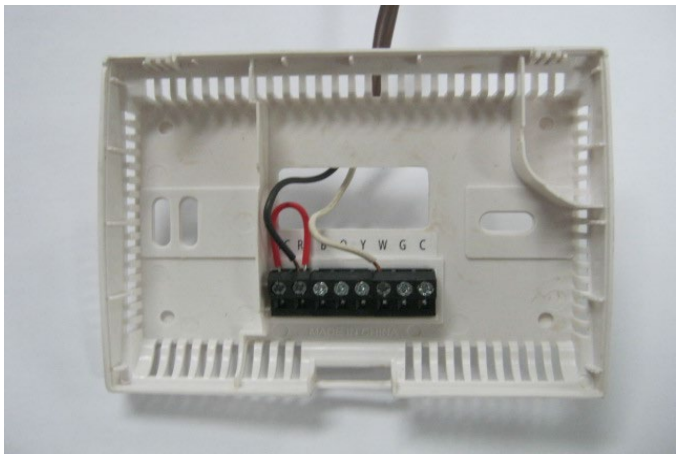

Connect one wire to the terminal block on the underside of the screw marked "RH" and the other wire to the underside of the screw marked "W". The red jumper wire can be left in place. For further information, please refer to the manufacturer's instructions.

FURNACE OPERATION

18 HOW IT WORKS?

The Caddy Advanced CR furnace features a self-regulated combustion air supply control system. Using two temperature sensors in the combustion chamber that measure temperature in real time, your furnace will automatically adjust the amount of combustion air required to achieve the cleanest, most efficient combustion.
Coupled with the thermostat, the furnace will automatically modulate the combustion rate according to the thermostatic demand. When the thermostat calls for heat, combustion will be at its maximum burn rate. Conversely, when the thermostat is satisfied with heat, the combustion burn rate will be slowed down to maximum.

A third temperature sensor located in the plenum controls the air distribution fan. This will distribute the necessary heat into your ducts to satisfy the thermostat while maintaining a safe temperature in your heating system.

18.1 HOW RELOAD BUTTON WORKS?

The furnace is equipped with a backlit reload button located at the front. To optimize combustion during lighting and reloading, it is necessary to press the reload button. When you press the button, it will flash rapidly three times. Automatically the combustion air supply will be increased to its maximum, facilitating ignition and reloading.

The indicator light on the button shows the status of your furnace in relation to thermostatic demand and the available heat. See the table below for details of each state.

Led button states	Meaning	Furnace status
Light is ON 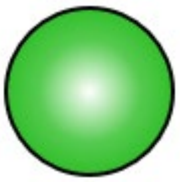	The thermostat calls for heat and heat is available in the combustion chamber.	**Maximum energy:** The furnace goes to maximum burn rate and attempts to provide maximum heat while maintaining clean and efficient combustion. Fan blows at normal speed.
Light is OFF 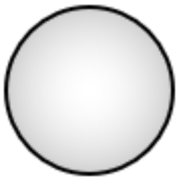	The furnace is cold. (Does not consider the state of the thermostat).	**Low energy:** The furnace is cold and needs to be relit with paper and kindling to provide heat.
Light blinking slowly (1.5 second per blink) 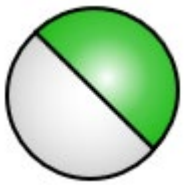	The thermostat does not call for heat and there is heat available in the combustion chamber.	**Energy saving:** The furnace burns to a minimum combustion and distributes as little heat as possible through the distribution air ducts to save wood while maintaining clean and efficient combustion. The fan cycles to remove excess heat.
Light blinking quickly (5 blinks per second):	The furnace has reached its maximum temperature.	**Thermal protection:** The furnace control system reduces to minimum the supply of combustion air. If combustion chamber maximum temperature is reached, fan will blow at normal speed. If plenum maximum temperature is reached, fan will blow at maximum speed. **DO NOT ADD WOOD!**

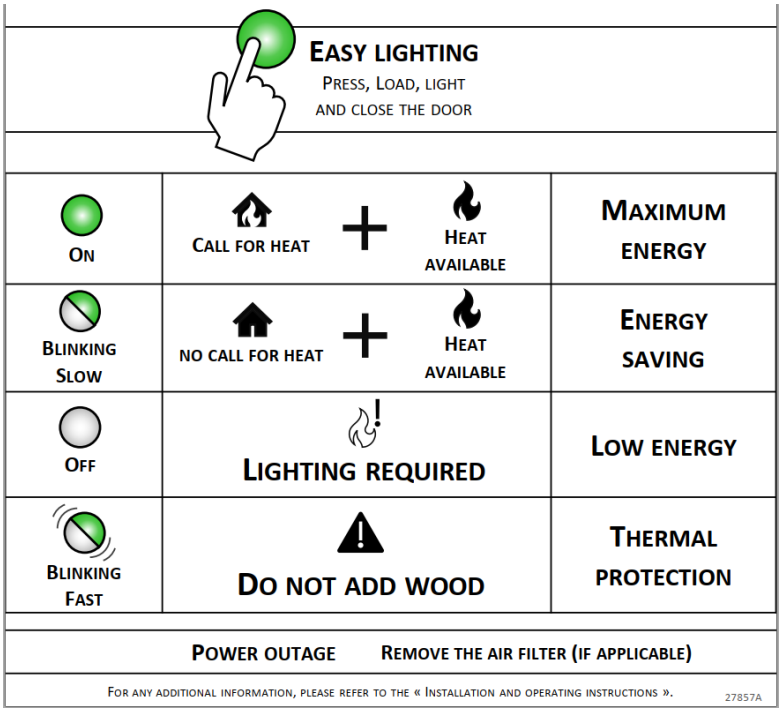

18.2 HOW TO LIGHT AND RELOAD THE FURNACE

Always keep a maximum of 4 inches of ash in the combustion chamber. Empty the ash drawer weekly to keep the furnace running smoothly. For clean, efficient combustion always keep some space between the logs and leave at least 4 inches of space in front of the logs.

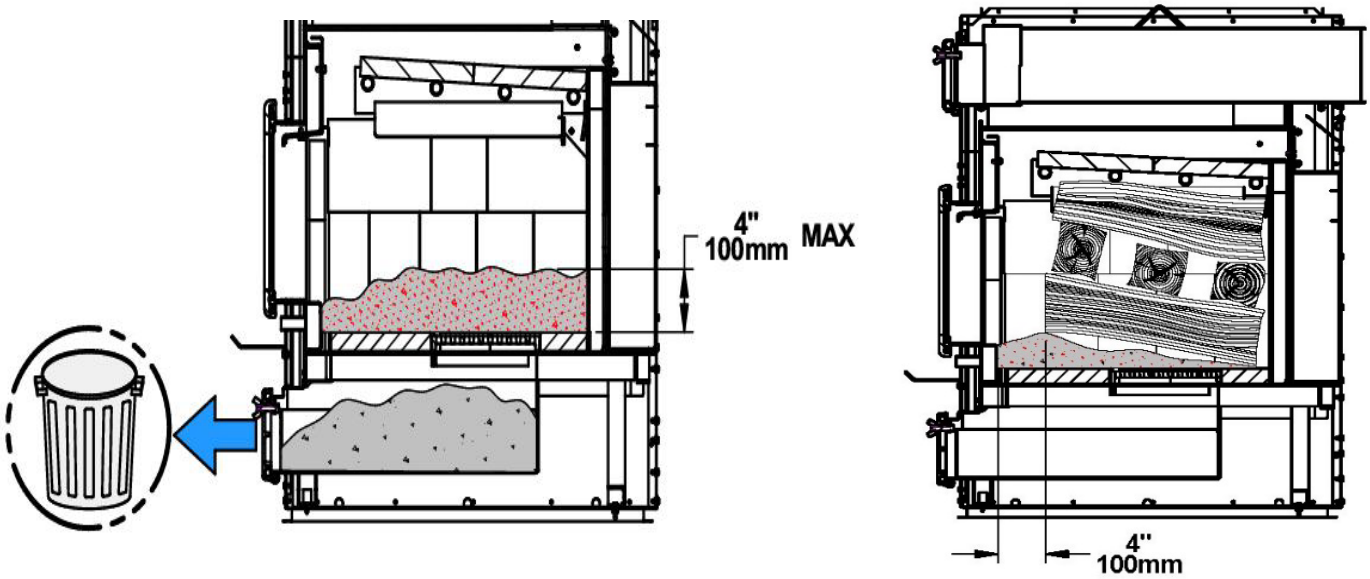

18.2.1 COLD START AND COAL EMBER BED (The led button light is OFF)

1. Press reload button before opening the door.	
2. Place crumpled paper and kindling on top of the ash grate.	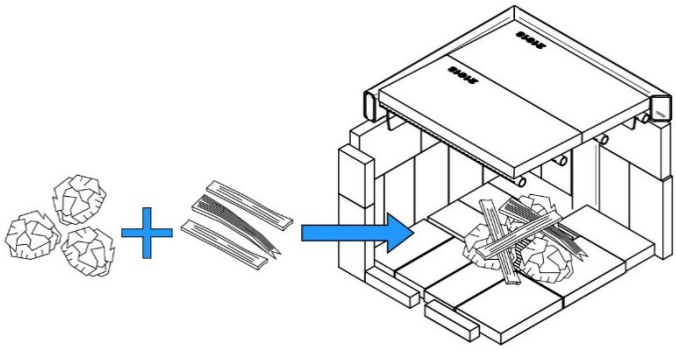
3. Place two logs North & South on each side of the kindling.	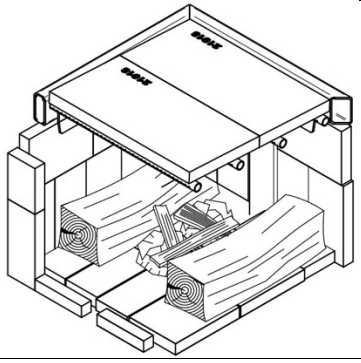
4. Superimpose logs perpendicularly over the first two logs.	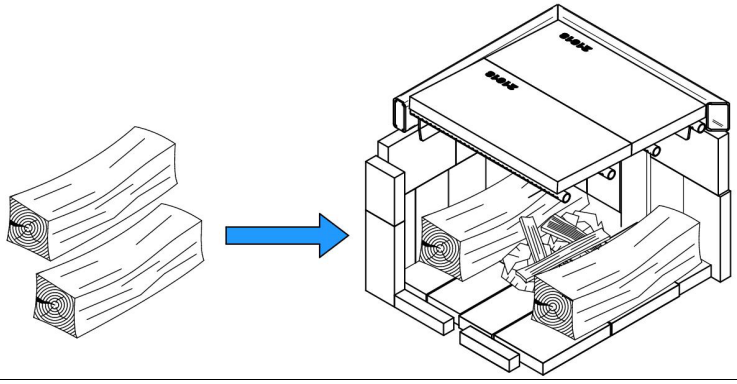
5. Light the paper and leave the door ajar (45 degrees). Wait until the kindling and the logs catch fire. Then close the door.	
Important: Never leave the furnace unattended with the door opened.	

18.2.2 HOT EMBER BED RELOAD (The led button light is ON or slowly blinking)

1. Press reload button before opening the door.	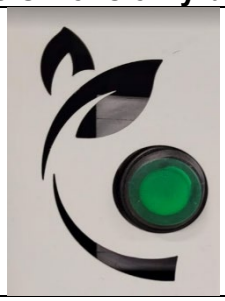

2. Open the door and bring hot embers to the front.	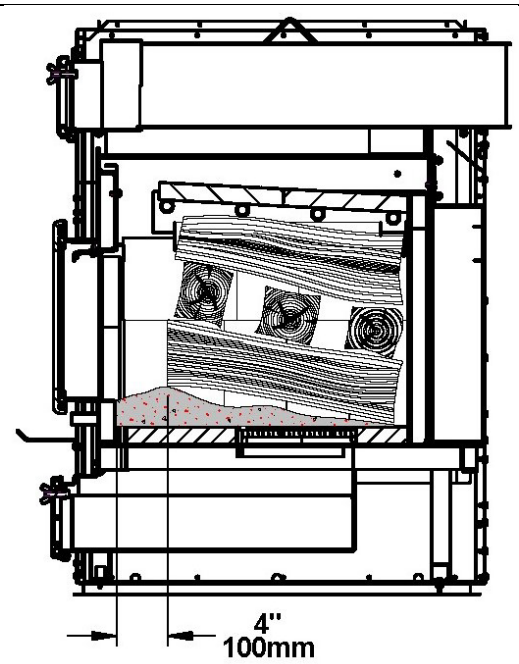
3. Place the logs at the back of the firebox. Place the first logs in a North-South position and superimpose logs perpendicularly over the first two logs. Always maintain a minimum of 4" free space at the front.	
4. Leave the door ajar (45 degrees) until the first flames appear. Then close the door.	
Important: Never leave the furnace unattended with the door opened.	

18.3 YOUR FIRST FIRES

DANGER
Risk of Fire or Explosion

CAUTION - Hot Surfaces:
Keep children away!
Do not touch during operation

Two things will happen when burning the first few fires; the paint will cure, and the internal components of the furnace will condition.
As the paint cures, certain chemical elements vaporize. The vapors are non-toxic but have an unpleasant smell. Fresh paint fumes can also cause false alarms in smoke detectors.
So, when lighting the furnace for the first times, be prepared by opening doors and/or windows to vent the home. Burn two or three small fires to begin the curing and conditioning process. Then light larger, hotter fires until the furnace no longer smells of paint.

18.4 LIGHTING FIRES

Each person who heats with wood develops their own favorite method of building and lighting fires. Whatever method you choose, your goal should be to get a hot fire burning quickly. A fire that starts fast produces less smoke and less creosote deposits in the chimney.

Here are three popular and effective ways to start wood fires.

18.4.1 CONVENTIONAL FIRE STARTING

The conventional way to build a wood fire is to bunch up 5 to 10 sheets of plain newspaper and place them in the combustion chamber. Next, place a dozen or so pieces of fine kindling on the newspaper. This kindling should be very thin; less than 1” (25 mm). Next, place some larger kindling pieces on the fine kindling. Press the reload button and light the newspaper. If you have a tall, straight venting system you should be able to close the door immediately. If your venting system has elbows or an outside chimney, you may need to leave the door ajar for a few minutes as the newspaper ignites and heat in the chimney produces some draft. Once the fire has ignited, close the door.

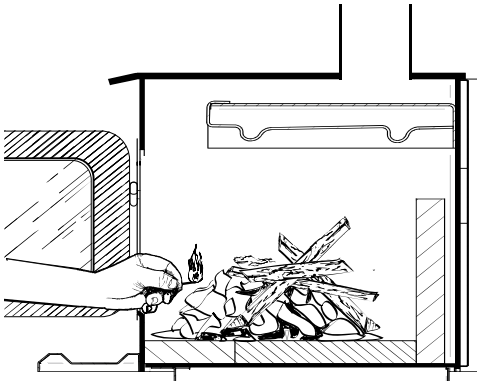

A conventional kindling fire with paper under finely split wood.

DO NOT LEAVE THE FURNACE UNATTENDED WHEN THE DOOR IS SLIGHTLY OPENED DURING LIGHTING. ALWAYS CLOSE THE DOOR AFTER LIGHTING.

After the kindling fire has mostly burned, you can add firewood pieces until you have a fire of the desired intensity for the weather conditions.

18.4.2 THE TOP-DOWN FIRE

The top-down fire-starting method solves two problems encountered when using he conventional method: firstly, it does not collapse in on itself and smother itself out. secondly, it is not necessary to build up the fire gradually because the combustion chamber is loaded before the fire is lit. A top-down fire can provide up to two hours of heating or more. The top-down method only works properly if very dry wood is used.

Start by placing three or four full-sized split pieces of dry firewood in the combustion chamber. Next, place 4 or 5 more finely split pieces of firewood (2" to 3" (51 mm to 76 mm) diameter) on the base logs at right angles (log cabin style). Now place about a dozen pieces of finely split kindling on the second layer at right angles.

The fire is then topped with about 5 balled up sheets of newspaper. You can just bunch them up and stuff them in between the kindling and the underside of the baffle. Or you can make newspaper knots by rolling up single sheets corner to corner and tying a knot in them. The advantage of knots is that they do not roll off the fire as they burn. Light the newspaper and watch as the fire burns from top to bottom.

18.4.3 TWO PARALLEL LOGS

Place two spit logs in the combustion chamber. Place a few sheets of twisted newspaper between the logs. Now place some fine kindling across the two logs and some larger kindling across those, log cabin style. Light the newspaper.

18.4.4 USING FIRE STARTERS

Many people like to use commercial firelighters instead of newspaper. Some of these are made from sawdust and wax, while others are made from special flammable chemicals. Follow package instructions for use.

Gel starters can also be used, but only to light a fire, in a cold combustion chamber without hot embers inside.

19. MAINTAINING WOOD FIRES

19.1 GENERAL ADVICE

Wood heating is very different than other forms of heating.

Do not expect steady heat output from your furnace. It is normal for its temperature to rise after a new load of wood is ignited and for its temperature to gradually decline as the fire progresses. This rising and falling of temperature can be matched to your household routines. For example, the area temperature can be cooler when you are active, such as when doing housework or cooking, and it can be warmer when you are inactive, such as when reading or watching television.

Wood burns best in cycles. A cycle starts when a new load of wood is ignited by hot coals and ends when that load has been consumed down to a bed of embers about the same size as it was when the wood was loaded. Do not attempt to produce a steady heat output by placing a single log on the fire at regular intervals. Always place at least three, and preferably more, pieces on the fire at a time so that the heat radiated from one piece helps to ignite the pieces next to it. Each load of wood should provide several hours of heating. The size of each load can be matched to the amount of heat needed.

When you burn in cycles, you rarely need to open the furnace's loading door while the wood is burning. This is an advantage because there is more chance that smoke will leak from the furnace when the door is opened as a full fire is burning. This is especially true if the chimney connector has 90-degree elbows and if the chimney runs up the outside wall of the home.

IMPORTANT

WHEN RELOADING, MAKE SURE YOU KEEP THE AIR INLETS LOCATED AT THE BOTTOM OF THE DOOR INSIDE THE COMBUSTION CHAMBER FREE OF ASH.

OPENING PROCEDURE FOR THE LOADING DOOR

TO MINIMISE THE RISK OF SMOKE SPILLAGE, CRACK THE DOOR OPEN ABOUT AN INCH (25 MM) AND WAIT ABOUT 10 SECONDS BEFORE OPENING IT WIDE TO ALLOW STABILISATION OF THE PRESSURE INSIDE THE FURNACE.

19.1.1 RAKING EMBERS

Rekindle the fire when you notice that the room temperature has fallen. Do not operate your furnace at too low a setting. Keep the air inlet opened long enough during the fire start-up to prevent the fire from smoldering, which could stain the glass. You will find most of the remaining embers at the back of the combustion chamber, furthest from the door. Rake these embers towards the door before loading. There are two reasons for this raking of the embers. First, it concentrates them near where most of the combustion air enters the combustion chamber and where they can ignite the new load quickly, and second, the embers will not be smothered by the new load of wood. If you were to simply spread the embers out, the new load will smolder for a long time before igniting.

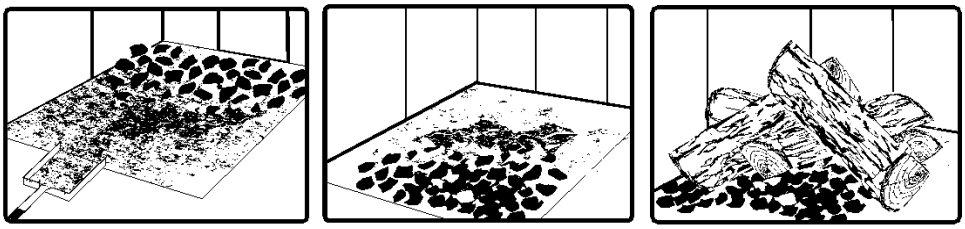

Remove ash first, and then rake embers towards the front of the combustion chamber before loading so that it will ignite the new load. Some people confuse ash (mostly a gray powder) with embers remaining in their combustion chamber. Embers is wood in its final stages of combustion with significant heating value remaining and should not be discarded until fully consumed.

19.1.2 RELOADING WITH EMBERS

Press the reload button, place the new load of wood on and behind the embers not too close to the glass. Close the door. Firing each load of wood hot accomplishes several things:

- Removes moisture from the wood surface.
- Creates a layer of char on the wood, which slows down the release of smoke.
- Heats the combustion chamber components so they reflect heat back to the fire.
- Heats the chimney so it can produce a strong, steady draft for the rest of the cycle.

DO NOT LEAVE THE FURNACE UNATTENDED WHILE A NEW LOAD IS BEING FIRED HOT.
DO NOT OVERFIRE.

When you burn a new load of wood hot to heat up the wood, the furnace and the chimney, the result will be a surge of heat from the furnace. This heat surge is welcome when the room temperature is a little lower than desirable, but not welcome if the space is already warm. Therefore, allow each load of wood to burn completely so that the space begins to cool off a little before loading.

19.1.3 CONTROL OF THE AIR SUPPLY

Once the firewood is lit and the combustion chamber and chimney are hot, the air intake controls will gradually close to maintain an optimal combustion chamber temperature.

19.1.4 BUILDING DIFFERENT FIRES FOR DIFFERENT NEEDS

Your home will need far less heat in October than in January to maintain a comfortable temperature. If you fill the combustion chamber in the fall, you will either overheat the space or turn the furnace down so much that the fire will smolder and be inefficient. Note that a small, intense fire burns much cleaner than a large, smothered one. Here are a few suggestions for building fires to suit different heating needs.

19.1.5 SMALL FIRES TO TAKE THE CHILL OUT OF THE HOME

To build a small fire that will produce a low heat output, use small pieces of firewood, and load them crosswise in the combustion chamber. The pieces should only be 3” (76 mm) to 4” (102 mm) in diameter. After raking the embers to the front, you can lay two pieces parallel to each other corner to corner in the combustion chamber and lay two more crosswise on top. This kind of fire is good for mild temperatures when you are around to tend to the furnace and should provide enough heat for four hours or more. Small fires like this are a suitable time to use soft wood so there will be less chance of overheating the home.

19.1.6 LONG LASTING LOW OUTPUT FIRES

Sometimes you will want to build a fire to last up to eight hours but want to produce intense heat. In this case use soft wood and place the logs compactly in the combustion chamber so the pieces are packed tightly together.

19.1.7 HIGH OUTPUT FIRES FOR COLD WEATHER

When the heat demand is high during cold weather, you will need a steady, lively fire. This is the time to burn your biggest pieces of hardwood logs if any are available. Place the largest logs at the back of the combustion chamber and place the rest of the pieces compactly. A densely built fire like this will produce the longest burn your furnace can give. The combustion chamber has no loading limit. It can be filled with wood up to the secondary air tubes.

19.1.8 MAXIMUM BURN CYCLE TIMES

The combustion time or cycle is the period between addition of wood to a bed of embers and the consumption of this wood back to a bed of embers of the same size. A combustion cycle is divided into two main phases, the first being the flame phase which lasts for roughly the first half of the burn cycle and the second being the ember phase, during which there is little or no flame. The duration of a combustion cycle will vary according to the following factors:

- Combustion chamber size
- Amount of wood loaded
- Species of wood you burn
- Size of the space to be heated
- Climate zone you live in
- Time of year
- The moisture content of the wood
- Time cycle for the thermostat to call for heat

19.2 PROLONGED POWER OUTAGE

To reduce the risk of overheating in the event of a prolonged power outage (more than 10 minutes), the air intake controls will close automatically. In this scenario, remove the air filter to improve the natural circulation (convection) of warm air rising into the plenum and beyond. To avoid the possibility of overheating, do not load the furnace to more than 50% of its capacity.

20. THE VENTING SYSTEM

20.1 General

The venting system, made up of the chimney and the connecting pipe between the furnace and the chimney, acts as the engine that drives the wood heating system. Even the best furnace will not function safely and efficiently if it is not connected to a suitable chimney.

The heat contained in the exhaust gases passing from the furnace to chimney connector, and then to the chimney is not wasted heat. This heat used by the chimney to create the draft that draws in combustion air, keeps smoke inside the furnace and safely exhausts the gases to the open air. The heat contained in the exhaust gases can be thought of as the fuel used by the chimney to create draft.

20.2 Suitable Chimneys

This furnace will provide optimum efficiency and performance when connected to a 6" diameter chimney flue system. The connection to a chimney having a diameter of at least 5" (Canada only) or no more than 7" is permitted if it allows the proper evacuation of combustion gases and that such application is verified and authorized by a qualified installer. Otherwise, the diameter of the flue must be 6".

To be suitable, a factory-built metal chimney must comply with UL 103 HT (U.S.A.) or ULC S629 (Canada).

20.3 Factory-Built Metal Chimneys

These are often referred to as “high temperature” chimneys because they have specific characteristics to withstand temperatures that can be created by wood-burning appliances. Factory-built chimneys are tested as a system, with all the components required for installation. The instructions provided with the chimney by its manufacturer are the only reliable source of installation guidelines. To be safe and effective, the chimney must be installed exactly in accordance with the manufacturer’s guidelines. Only components intended for the brand and model of chimney must be used. Never fabricate or substitute parts from other chimney brands. The chimney must be of a type suitable for solid fuel.

To maintain an effective vapor barrier, insulation and waterproofing, at the chimney and outside flue pipe, a roof flashing must be installed and sealed with a silicone-based adhesive.

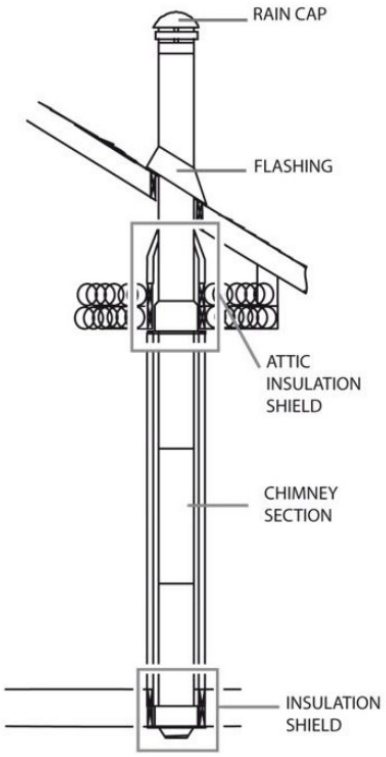

20.3.1 MASONRY CHIMNEYS

The furnace may also be connected to a masonry chimney, provided the chimney complies with the construction rules found in the local building code. The chimney must be fitted with a clay liner or appropriate approved stainless-steel liner. If the masonry chimney has a square or rectangular liner that is larger in cross-sectional area than a round 6" flue, it must be relined with an approved 6" stainless steel liner. Do not downsize the flue to less than 6" unless the venting system is straight and exceeds 25 feet in height. When passing through a combustible wall, the use of an insulated listed thimble is required.

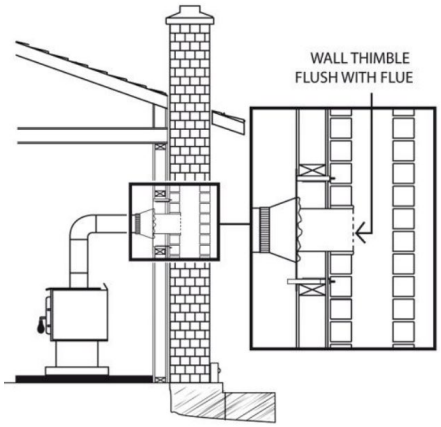

20.4 Minimum Chimney Height

The top of the chimney should be tall enough to overcome air turbulence caused when wind blows against the home and its roof. The chimney must extend at least 3 ft. (1 m) above the highest point of contact with the roof, and at least 2 ft. (60 cm) higher than any roof line or obstacle within a horizontal distance of 10 ft. (3 m).

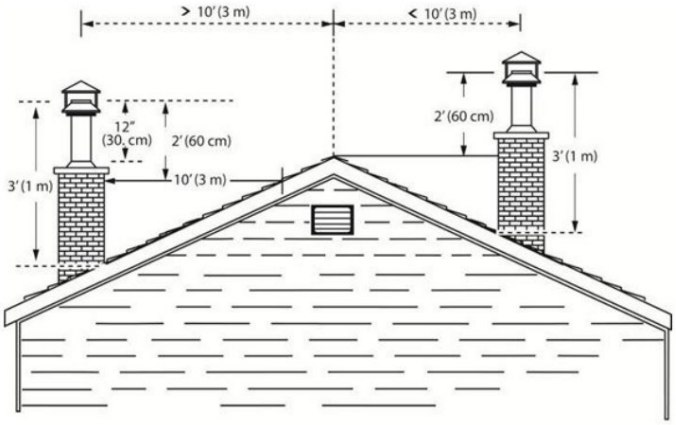

20.5 Chimney Location

Because the venting system is the engine that drives the wood heating system, it must have the right characteristics. The signs of an improper system design are cold downdrafts when there is no fire in the furnace, slow ignition of new fire, and smoke roll-out when the door is opened to reload the furnace. To avoid this, there are two basic guidelines to follow. First, the chimney should be installed up through the heated space of the home, not out and up an outside wall. Second, the chimney should pass through the upper part of the building in or near the highest heated area.

Venting systems that are installed vertically, directly from the furnace flue collar provide the best performance. Chimneys installed in the heated part of the home tend to produce a slight amount of draft, even when there is no fire burning. This means that when a fire is lit, the smoke goes up the chimney and a strong draft quickly develop as the chimney flue heats up. Although widespread in North America, chimneys that pass through a wall and are installed along an exterior wall can cause problems.

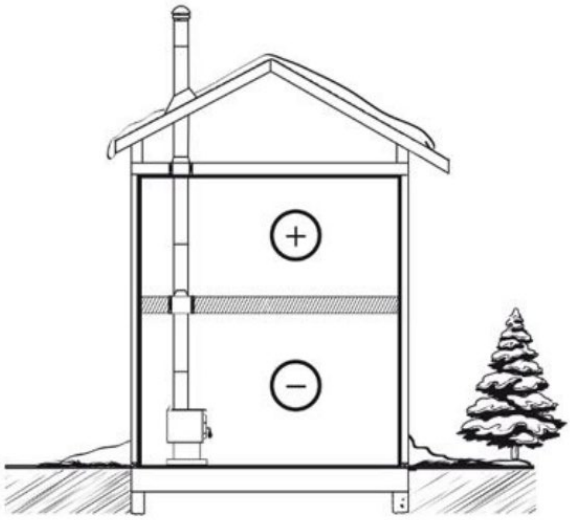

Good System Design

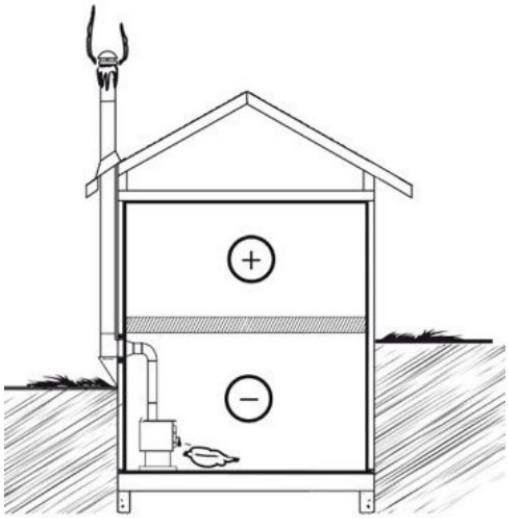

Inferior System Design

When it is cold outside, the warmer, lighter air in the home tends to rise. This creates a slight pressure difference in the home. Known as, “stack effect”, this produces a slight negative pressure in the lower part of the home (relative to the outside) and a zone of slightly high pressure in the higher part of the home. When there is no fire burning in an appliance connected to a chimney lower than the warm space inside the home, the slight negative pressure in the lower part of the home will oppose the desired up-draft in the chimney. This occurs for the two following reasons:

First, the chimney runs up the outside of the home, so the air in it is colder and denser than the warm air in the home. Second, the chimney is shorter than the heated space of the home, meaning the negative pressure in the lower part of the home will draw cold air down the chimney, through the furnace and into the room. Even the best furnace will not work well when connected to this chimney.

20.6 Supply of Combustion Air

For the furnace draft to function properly, the room must have an outside or fresh air inlet of at least 5" in diameter, sufficient to replenish the volume of air leaving through the chimney. In well insulated homes, an air inlet must be fitted through the exterior wall that is not exposed to prevailing winds, depending on the ambient conditions of the home. The air intake must be installed in such a way that it cannot be blocked.

When the furnace and the chimney are completely cold, it may be necessary to provide an external air supply by opening a door or a window for a brief period, prior to lighting. A home constructed or renovated with an air-tight vapor barrier is prone to require a supply of outside air to keep the appliance operating properly.
In this case, avoid, during startups, to use appliances that evacuate air outside of the home, such as:

- Cookstove range hood
- Bathroom vent
- Air exchange system
- Ventilated central vacuum cleaner.
- Dryer

Fresh air can be supplied in several ways, provided they comply with CSA B365 and NFPA 211.
In Canada, wood-burning appliances are not required to have an outside combustion air supply (except for mobile homes). Research has shown that these supplies do not compensate for home depressurization and may not be sufficient to provide combustion air on windy days. However, to reduce the risks against smoke spillage due to home depressurization, a carbon monoxide (CO) detector is required in the room where the appliance is installed. The CO detector will provide warning if for any reason the wood-burning appliance fails to function correctly.

20.6.1 Conventional Home

The safest and most reliable supply of combustion air for a wood-burning appliance is from the room in which it is installed. Room air is already preheated so it will not cool the fire, and its availability is unaffected by wind pressures on the home. Contrary to popular belief, all new, hermetically sealed homes have enough natural leakage to provide the small amount of air needed by the furnace. The only time in which wood-burning appliance may not have adequate access to combustion air is if the operation of a powerful exhaust device (such as a range hood) causes the pressure in the home to become negative in relation to the outside air.

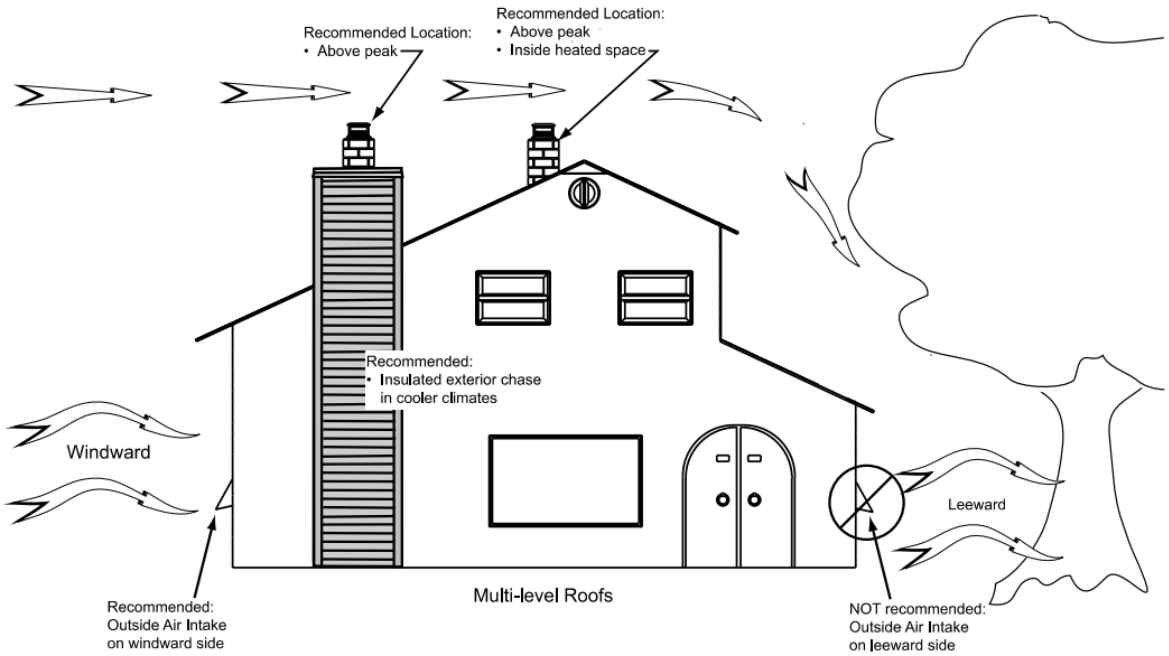

Air supply in conventional homes

If an air intake is installed through the wall of the home, its pressure can vary during windy conditions. If there are changes in the performance of the wood-burning appliance in windy conditions, and in particular if puffs of smoke are coming out of the appliance, the air supply duct should be disconnected from the wood-burning appliance to determine whether it is the cause of the problem. In certain windy conditions, negative pressure near the weather cap outside the home may draw hot exhaust gases from the wood-burning appliance into the duct, towards the outdoors. Check the outside air intake duct for soot deposits when the full system is cleaned and inspected at least once each year.

20.7 Installing the Chimney Connector

The chimney connector, or chimney pipe, is the single- or double-wall pipe installed between the wood-burning appliance flue and the chimney collar. Single-wall pipe sections are available at most hardware and building supply stores. These sections have not been tested to a specific standard, nor have they been approved. Consequently, a series of rules found in solid-fuel heating appliance installation codes apply to the installation of single-wall pipe. Double-wall chimney connectors are tested and certified. The rules for double-wall pipes can be found in the manufacturer's installation instructions. These rules are very different from those for single-wall pipes. Please refer to the wood-burning appliance's installation and operating manual, options section, to find out if any special configuration is required for your product.

20.7.1 INSTALLATION OF SINGLE WALL CHIMNEY CONNECTOR

The chimney connector assembly has been called “the weak link” in wood-burning system safety, because failure to install the connector properly (which has happened many times in the past) can result in house fires.

The best flue pipe installation is one that runs straight up from the wood-burning appliance to the base of the chimney without any bends. Straight installations are less likely to cause problems, such as smoke spill-back, when the door is opened for reloading. They are also more stable and easier to maintain than installations with elbows. Horizontal runs of flue pipe should be avoided where possible as they reduce chimney draft.

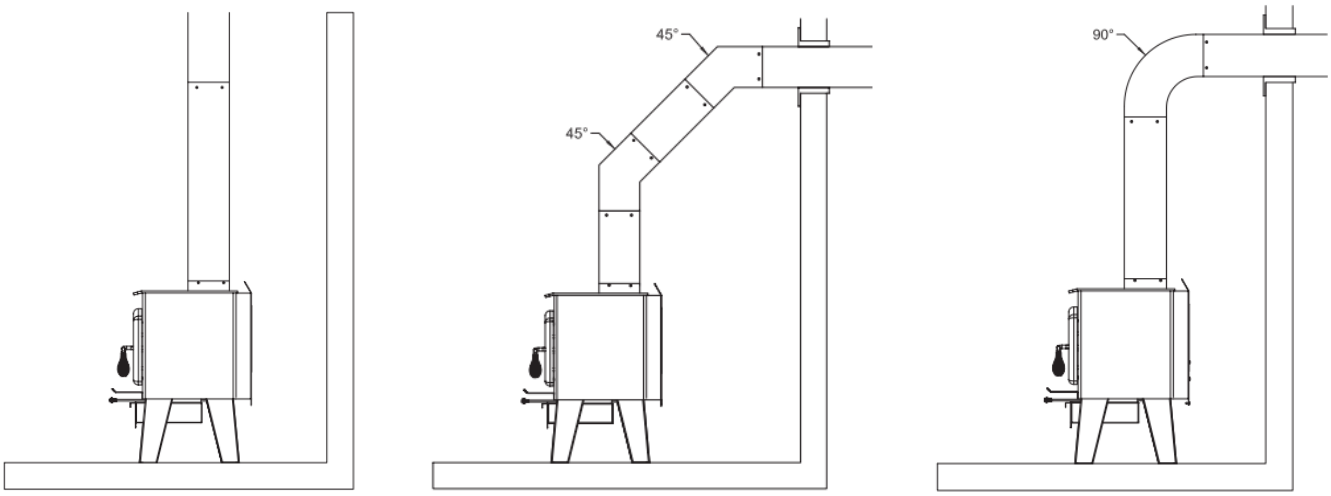

Best Acceptable Avoid

The rules below are based on those found in the CSA-B365 and NFPA 211 installation code. Please follow these installation instructions carefully, or those enforced by local code.

- Maximum overall length of horizontal pipe: 10 ft. (3 m) including elbows.
- Minimum clearance from combustible material: 18" (450 mm). Minimum clearance may be reduced by 50 percent to 9" (225 mm) if suitable shielding is installed either on the pipe or on the combustible surface.
- The installation should be as short and straight as possible between the wood-burning appliance and the chimney. It is often preferable to use two 45-degree elbows rather than a single 90-degree elbow, as this will create less turbulence in the smoke and shorten the horizontal section.
- The minimum overall height of the chimney system, measured from the back of the furnace to the chimney cap should be at least 12 ft. (3.66 m). A chimney that is too short may lack the “tunnel effect” required to obtain adequate draft.
- Maximum number of 90-degree elbows: 2.
- Maximum unsupported horizontal length: 3 ft. (1 m).
- Galvanized flue pipes must not be used as their coatings vaporizes at elevated temperatures producing dangerous gases. Use black smoke pipes.
- Flue pipes must be at least 24 gauge in thickness.
- Flue pipe connections must overlap by at least 1 ¼" (30 mm).
- Each joint in the installation must be fastened with at least three screws.
- The installation must be able to expand. Elbows in installations allow for expansion; straight installations must include coupling pipe with one end unfastened, or a telescopic section.
- Minimum upward slope towards the chimney: ¼ in/ft. (20 mm/m).
- One end of the smoke pipe must be securely fastened to the flue collar of the appliance with 3 sheet metal screws and the other end securely fastened to the chimney.

- There must be provision for cleaning of the pipes, either through a clean out or by removal of the pipe assembly. Removal of the assembly should not require that the appliance be moved.
- The male ends of the black pipe sections must be oriented towards the appliance so that falling ash and condensation remain inside the pipe.
- A flue pipe must never pass through a combustible floor or ceiling or through an attic, roof space, closet, or concealed space. Where passage through a wall or partition of combustible material is desired, the installation must conform to CAN/CSA-B365 and NFPA 211, Installation Code for Solid-Fuel-Burning Appliances and Equipment.
- A straight up connector assembly needs either a telescopic length or an inspection wrap (pipe coupler) to allow it to be assembled and disassembled without moving the stove.
- A straight flue pipe installation offers the least restriction to smoke exhaust and results in a stronger draft. Straight installations also need less maintenance because there are no corners for creosote to settle.
- The chimney and chimney connector must be clean and in good condition.

21. FURNACE MAINTENANCE

Your new furnace will give you many years of reliable service if used and maintained correctly. Some of the internal components of the combustion chamber, such as firebricks, baffles, and air tubes, will wear over time under intense heat. You should always replace defective parts with original parts. See section **20 EXPLODED DIAGRAM AND PARTS LIST**. For firing each load hot to begin a cycle as described above will not cause premature deterioration of the furnace. However, if the thermostat is always calling for heat, this may eventually damage the furnace over time. The more the furnace overheats during combustion cycles, the faster its elements will deteriorate.

For that reason, never leave the furnace unattended while a new load is being fired hot.

Recommended Maintenance Scheduled

Use this as a guide when the furnace is used under normal conditions.

Components	Weekly or after **± 1/3 Face cord**	Monthly **± 1 Face cord**	Annually or **± 3 Face cord**
Glass	Inspect and Clean*		
Combustion Chamber	Empty / Vacuum using an Ash vacuum*	Inspect	
Ash drawer	Empty*		
Air filter		Clean or replace monthly if need be	
Firebricks		Inspect	
Baffle		Inspect	
Air tube		Inspect	
Heat Exchanger		Inspect, Sweep and Clean*	
Door tightness		Inspect and adjust or replace gasket if necessary	
Thermocouples			Inspect and Clean
Chimney			Sweep and Clean if necessary*
Blower			Clean

Face cord; 4’ x 8’ x 16" (≈42 ft^3)

*Cleaning frequency may vary depending on the type of fuel used. Fuel with higher humidity and ash content will increase cleaning frequency.

CAUTION! IT IS PARTICULARLY IMPORTANT TO CLEAN THE HEAT EXCHANGERS, FLUE PIPE AND CHIMNEY THOROUGHLY AT THE END OF THE HEATING SEASON. THIS IS TO MINIMIZE AND PREVENT CORROSION DURING THE SUMMER MONTHS, CAUSED BY ACCUMULATED ASH AND/OR SOOT AND/OR CREOSOTE.

21.1 ASH REMOVAL

Ash should be removed from the combustion chamber every week during the heating season. Do not allow ash to accumulate excessively in the combustion chamber as it will interfere with proper furnace operation. A little remaining ash is not a problem, but it is not imperative to remove all the ashes, as aggressive cleaning can shorten the life of the firebricks. Ironically, some hardwoods produce much more ash than pine, spruce, and fir. The best time to remove ash is after an overnight fire when the furnace is cool, but there is still some chimney draft to draw the ash dust into the furnace and prevent it from escaping into the room. Once the ashes have been removed from the furnace and placed in a tightly covered metal container, they should be taken outside immediately. The closed container of ashes should be placed on a non-combustible floor or on the ground far away from all combustible materials pending final disposal. Ashes normally contain some hot embers that can remain hot for several days. If ashes are disposed of by burial in the ground or otherwise dispersed on site, they should be kept in the closed container until they have cooled completely. No other waste should be placed in this container.

NEVER STORE ASHES INDOORS OR IN A NON-METALIC CONTAINER OR ON A WOODEN DECK. ALWAYS LEAVE THE CONTAINER ON A NON-COMBUSTIBLE FLOOR.

21.2 CLEANING DOOR GLASS

Under normal conditions, your door glass should stay relatively clean. If your firewood is sufficiently dry and you follow the operating instructions in this manual, a whitish, dusty deposit will form on the inner surface of the glass after a week or so of use. This is normal and can be easily removed when the furnace is cool. Wipe the glass with a damp cloth or paper towel and then dry. Never attempt to clean the glass when the furnace is hot.

In spring and fall, when the furnace cycles less often, you may notice some light brown stains, especially in the lower corners of the glass. This indicates that the combustion has been incomplete and some of the smoke has condensed on the glass. When the weather is mild, you may find that letting the fire die down is better than trying to maintain it. Use the technique described above to build fires that will take the chill out of your home. **If brown spots should appear on the glass, they can be removed with special glass cleaners for wood-burning appliances. Do not use abrasive cleaners on the glass.**

The deposits that form on the glass are the best indication of the quality of your fuel and how well you are doing in operating the furnace. Your goal should be clean glass with no brown stains. If you continue to see brown stains on the glass, something about your fuel and operating procedure needs to be changed. Stains on the glass indicate incomplete wood combustion, which also means more smoke emissions and faster formation of creosote in the chimney.

When brown streaks are coming from the edge of the glass, it is time to replace the gasket around the glass. The glass gasket must be self-adhesive. Follow the instructions in section **18.4 REPLACEMENT OF THE GLASS AND GASKETS FOR INSTALLATION**. Always replace gaskets with genuine ones. See section **20 EXPLODED DIAGRAM AND PARTS LIST.**

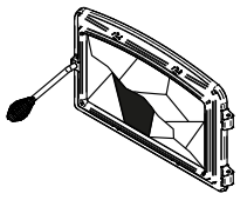

Do not clean the glass when the stove is hot.

Do not abuse the glass door by striking or slamming shut.

Do not use the stove if the glass is broken.

21.3 DOOR ADJUSTMENT

For optimum performance, the furnace door must provide a perfect seal with the combustion chamber. Door adjustment is preset at the factory. Over time, the gasket may sag, making readjustment of the door necessary. The tightness of the door seal can be verified by closing and latching the door on a strip of paper. The test must be performed all the way around the door. If the paper slips out easily at any point, either adjust the door or replace the gasket.

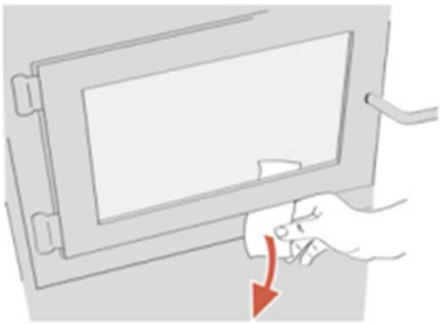

Door adjustment procedure:

1. Unscrew the locking pin **(B)** and nut **(A)** from the door.
2. To increase the pressure of the door on the gasket, turn the handle. counterclockwise, to reduce the pressure of the door on the gasket, turn the handle clockwise.
3. Finally, screw the locking pin **(B)** back in about 1/4" (6 mm) deep and make sure you lock it with the nut **(A)**. If after adjustment the door does not seal properly, replace the door gasket.

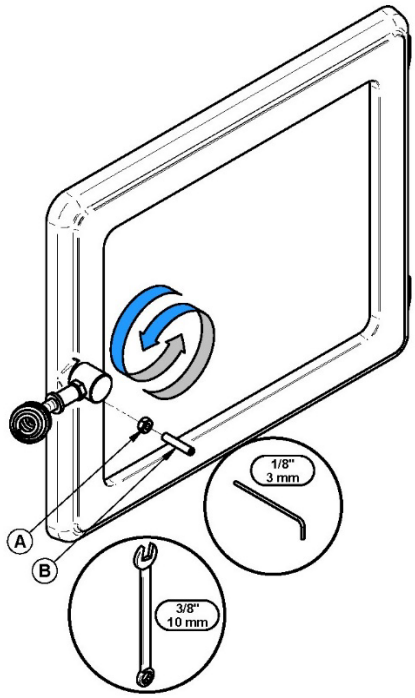

21.4 REPLACEMENT OF THE GLASS AND GASKETS

After a year or more of use, the door gasket will compress and become hard which can allow air to pass through. You can check the air tightness of your door gasket by closing and locking the door on a piece of paper. The test must be performed all the way around the door. If the paper slips out easily at any point, either adjust the door or replace the gasket.

Always use a genuine gasket that you can purchase from your dealer or online at www.caddyfurnaces.com. The correct size and density of the gasket are important to ensure a good seal. Never operate the furnace with a broken glass. When replacing the glass, be sure to use the proper ceramic glass. Ordering directly from your dealer or the manufacture is a good idea. The replacement glass supplied by SBI will always include the “self-adhesive flat glass gasket” installed on the replacement glass.

For the following steps, wearing gloves and safety glasses are recommended, as handling gaskets can irritate the skin and the glass can be sharp.

- To replace the door gasket, use steps 1 to 3 and 10 outlined below.
- To replace the glass, or glass gasket, use steps 1 and 3 to 9 outlined below.

1. Remove the door **(F)** and place it on a stable work surface, handle down.
2. Using pliers, remove the door gasket **(A)**.
3. Using a small scraper or flathead screwdriver, remove the adhesive left in the door gasket groove then clean the groove using a commercial vacuum cleaner.
4. Use a Phillips screwdriver or a power drill to remove the screws **(B)** that holds the glass retainer moldings **(C)**. If the screws are older and difficult to remove, consider using a penetrating oil to loosen them first. Be careful to not break or strip these screws.
5. Remove glass frame **(D).**
6. Remove glass **(E)** (or pieces of glass if it is damaged) and clean the inside of the door frame.
7. Remove the old glass gasket and discard.
8. Install the new gasket on the glass. Remove some of the paper covering the gasket adhesive. And center the gasket on the edge of the glass so that when folded and glued, the gasket is equal on both sides. Do not stretch the gasket during installation. Remove more of the paper and rotate the glass to facilitate and complete the installation of the gasket. When you return to the starting point, cut the gasket so that the ends overlap by about 1/2" (13 mm). If you purchase an SBI replacement glass, the glass gasket will have been installed on the glass for your convenience.

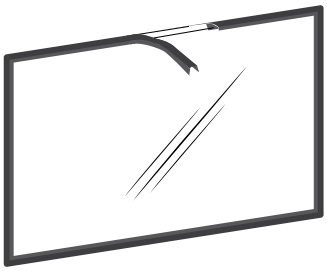

9. Install the glass **(E)** and glass frame **(D)** centering them in the door frame. Install the glass retainers **(C)** taking care not to over tighten the screws **(B)**. Note that the two main causes of glass breakage are uneven positioning in the door and over-tightened screws.

10. Install the new door gasket **(A)**. To do this, apply about 1/4" (6 mm) of adhesive to the bottom of the groove that holds the gasket in the door. Then lay the new gasket into it, starting from the center of the hinge side and taking care not to stretch the gasket during installation. Leave about 1/2" (13 mm) of gasket to extend beyond the door frame. Once jointed, push any protruding fibers back into the groove and into the adhesive. Install the door and let dry for 24 hours before using the furnace.

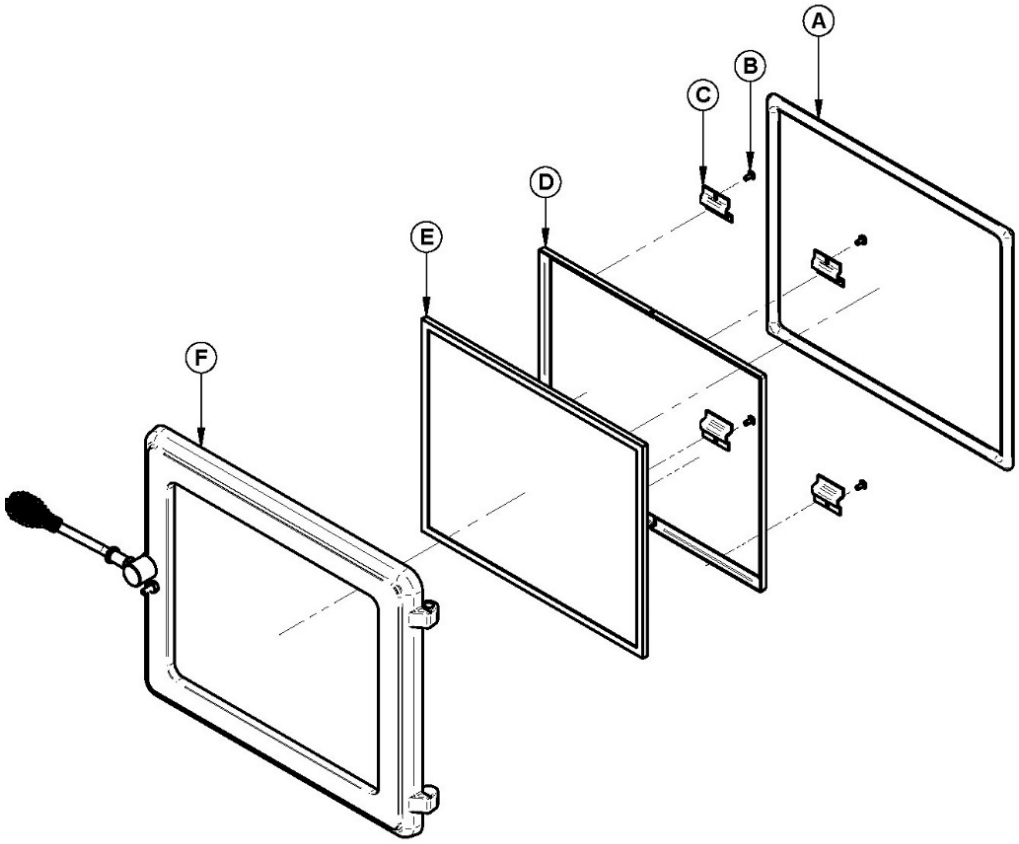

Do not abuse the glass door by striking or slamming shut. Do not use the furnace if the glass is missing, cracked or broken. To change the glass, use the procedure described above.

21.5 MAINTENANCE OF FURNACE EXTERIOR FINISH

Do not attempt to clean or paint the various finishes of the furnace while it is hot. Painted surfaces can be wiped with a slightly damp cloth. Plated and/or enameled surfaces may be scratched by abrasive cleaners.

To ensure that the finish retains its original luster, use only a soft, slightly damp cloth to clean plated or enameled surfaces.

If the paint is scratched or damaged, you can make your furnace look new again by repainting it with heat-resistant or enamel finish paint. Before painting, roughen the surface with fine sandpaper (unless enameled), wipe off any dust and apply two thin coats of paint. For best results, use the same paint that was originally used on the furnace, which is available in spray paint only. See your dealer for details.

21.6 HEAT EXCHANGERS CARE

Heat exchangers must be cleaned thoroughly at the end of each heating season. During summer months, air in basements is more humid, and with minimal air circulation within the furnace, it can mix with creosote and/or sooth deposits and form an acid that will accelerate the corrosion process and induce premature decay of the steel. Corrosion damages are not covered under warranty. Smoke pipe and exchangers must be inspected regularly during the heating season. Access to the exchangers is easy and does not require tools.

1. Unscrew the wing nut **(B)** and remove the washer **(C)** on the exchanger access door.

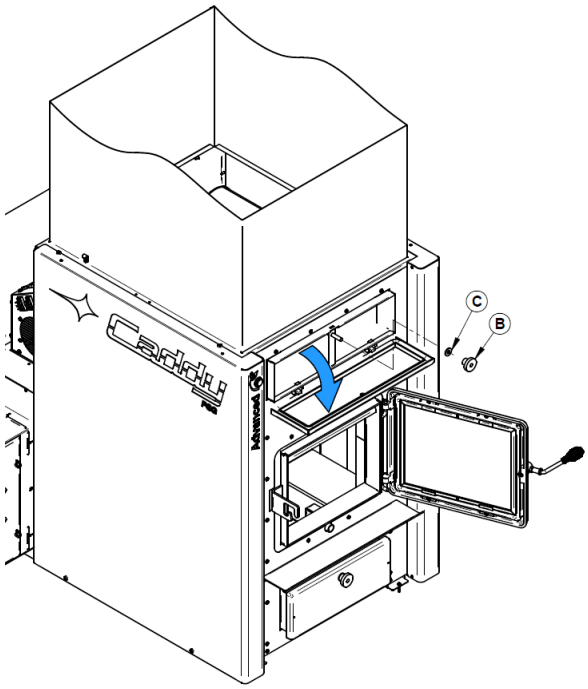

2. Move the baffle **(A)** of the combustion chamber forward.

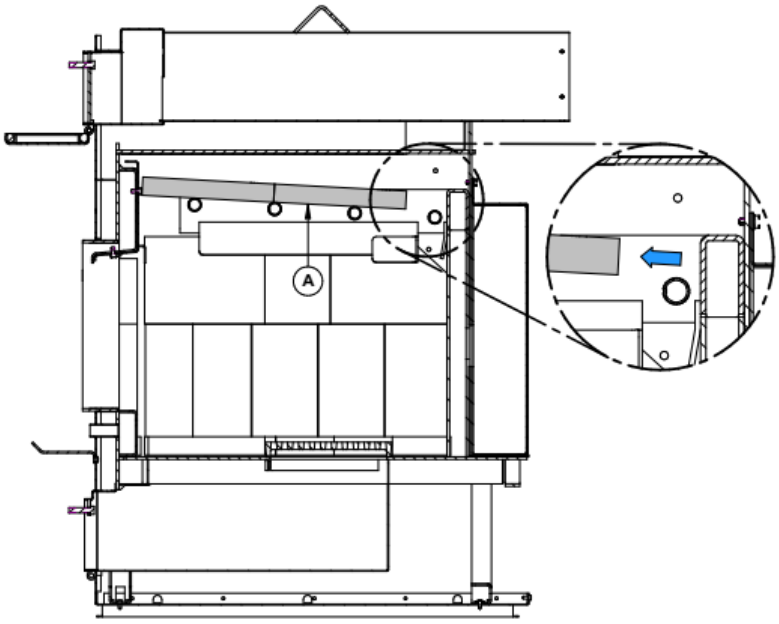

3. Use the scraper provided, clean the three exchanger pipes.

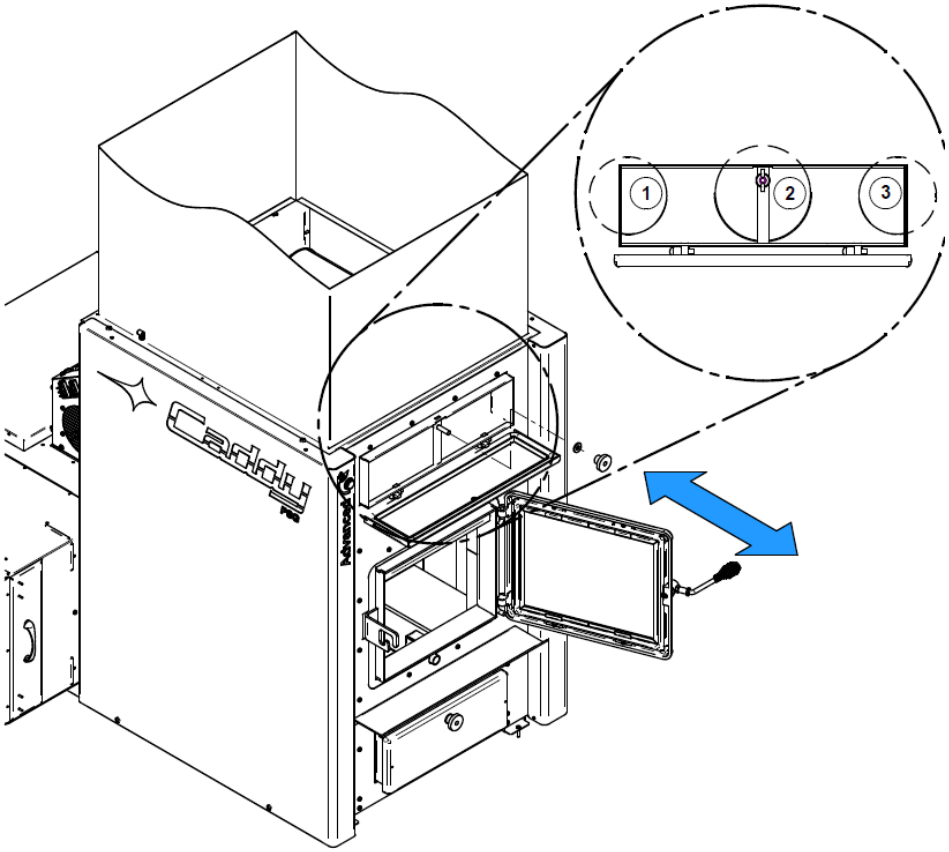

4. Dirt in the lateral exchangers **(1 and 3)** fall into the combustion chamber at the rear.

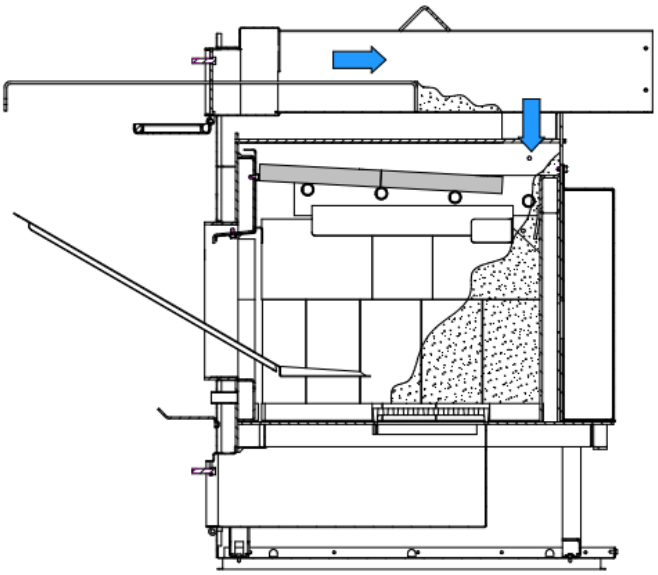

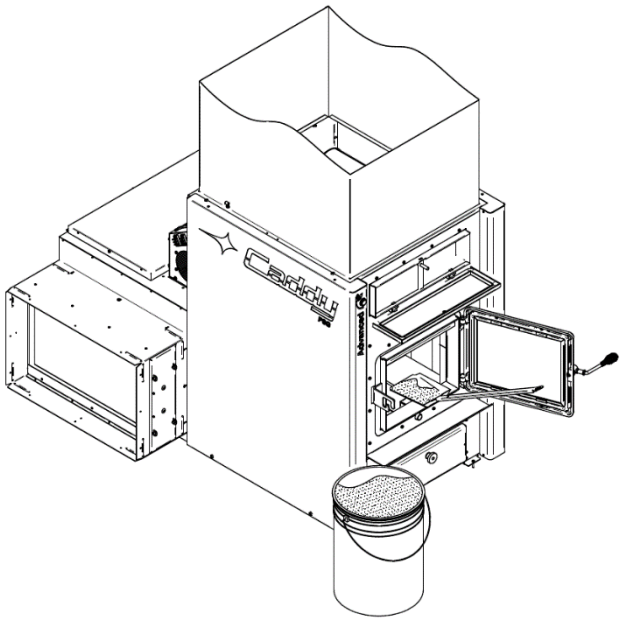

5. Dirt accumulated in the central exchanger **(2)** will be removed from the front or the rear of the furnace. If you remove dirt from the central exchange to the back of the furnace, remove the black pipe connector to dispose of the dirt.

6. Next, check that the baffle is clear of ashes and reposition it in its original position towards the back of the combustion chamber**. Important to note that the furnace will not burn properly if the baffle is not repositioned correctly.**

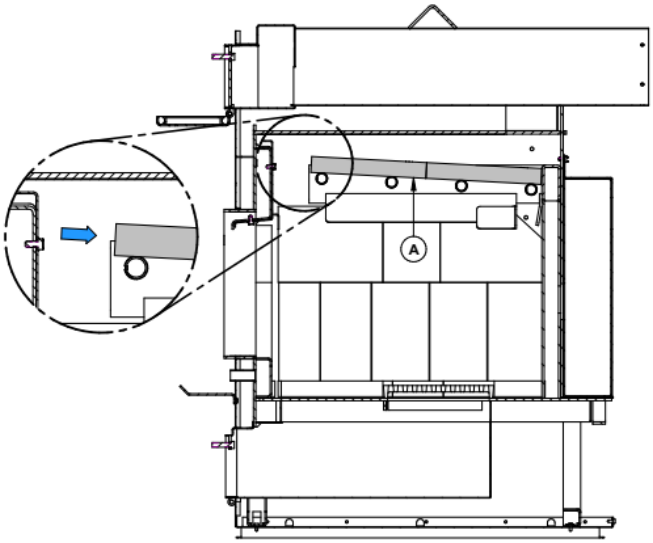

7. Finally, close the exchanger access door and secure it by putting back washer **(C)** and wing nut **(B)**.

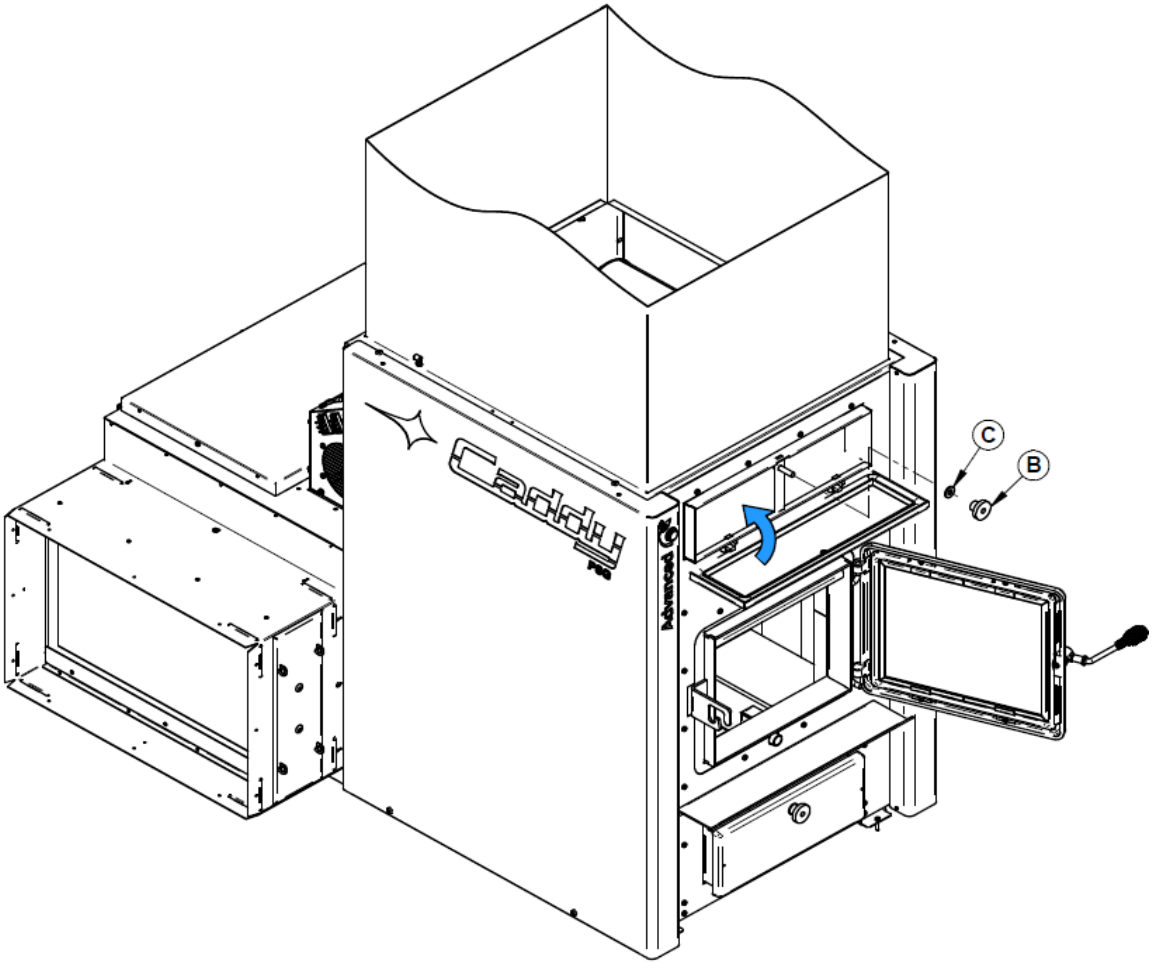

8. If you have performed the cleaning process by removing the chimney connector in the back of the furnace, be sure to reinstall the chimney connector with three screws at each connection.

21.7 THERMOCOUPLES CARE

1. Move the baffle **(A)** of the combustion chamber forward.

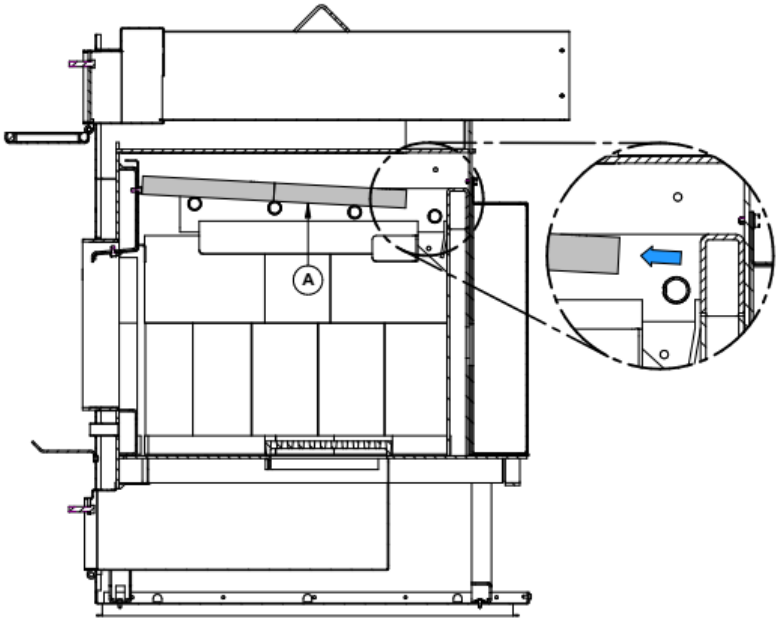

2. With a brush, carefully clean the surface of the thermocouples.

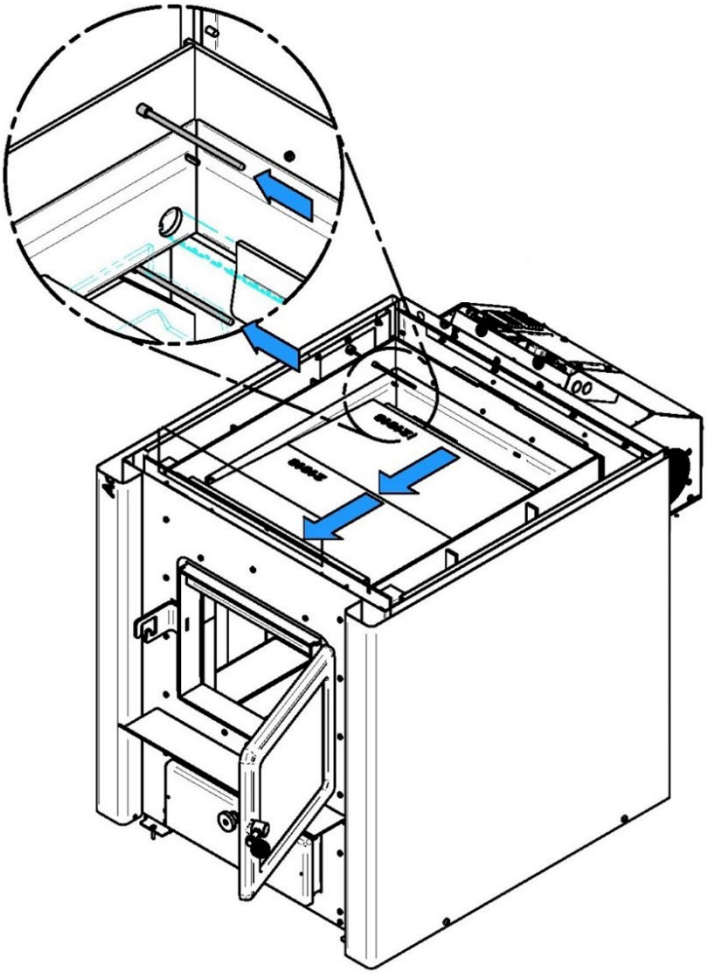

3. Then, reposition the baffle **(A)** in its original position towards the back of the combustion chamber. **Important to note that the furnace will not burn properly if the baffle is not repositioned correctly.**

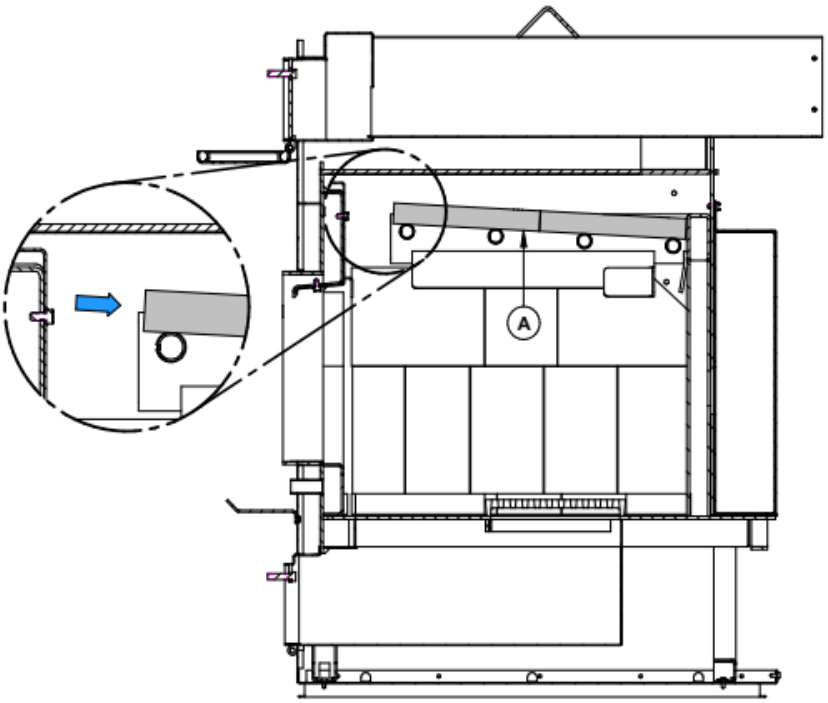

21.8 CHIMNEY MAINTENANCE

Wood smoke can condense inside the chimney connector and chimney, forming a flammable deposit called creosote. If creosote is allowed to build up in the venting system, it can ignite all the way up the chimney if the flue reaches ignition temperature severe chimney fires can damage even the best chimneys. Smoldering, smoky fires can quickly lead to the formation of a thick layer of creosote. Use dry wood and well-oxygenated fires, so that the gases coming out of the chimney are almost transparent, and the creosote forms more slowly. By operating your furnace correctly, you will achieve clean combustion thus reducing creosote build-up.

Cleaning frequency

It is not possible to predict how much or how quickly creosote will form in your chimney. It is important, therefore, to check the chimney daily or as often as possible for creosote buildup and this until the rate of creosote formation is known. Even if creosote forms slowly in your system, the chimney must be cleaned and inspected at least once each year.
Contact your municipal or provincial fire authority for information on how to deal with a chimney fire. Having a clearly established and understood plan on how to handle a chimney fire is very important.

Cleaning the chimney

Be sure whomever cleans the chimney understands that there is a baffle in the furnace that requires special attention in the cleaning process. Chimney sweeping can be a difficult and dangerous job. People with no chimney sweeping experience will often prefer to hire a professional chimney sweep to inspect and clean the system for the first time. After seeing the cleaning process, some will choose to do it themselves. Chimneys should be checked regularly to prevent creosote buildup.

The most common cleaning equipment used consists of fiberglass rods with threaded fittings and stiff plastic brushes. The brush is forced up and down inside the chimney flue to scrub off the creosote.

CAUTION! Operating your furnace without its baffle may result in unsafe and excessive temperature conditions and will void the warranty.

21.9 REFRACTORY BRICK INSPECTION

Verify the refractory bricks to ensure that none are broken or damaged in any way. If so, have the damaged ones replaced.

21.10 SMOKE PIPE INSPECTION

- The smoke pipe must be inspected regularly during the heating season.
- The pipe must be examined carefully to detect any defects or damages.
- The pipe can be reassembled if no defect is detected, and defective pipe must be replaced immediately.

Regularly inspect flue pipes, flue pipe joints, and flue pipe seals to ensure that smoke and combustion gases are not drawn into and circulated into the home by the air-circulation system.

21.11 INSTALLATION OF SECONDARY AIR TUBES AND BAFFLE

Secondary air tubes can be replaced without removing the baffle board. Moreover, the 4 tubes are identical,

so, there is no need to worry about the position of each tube.

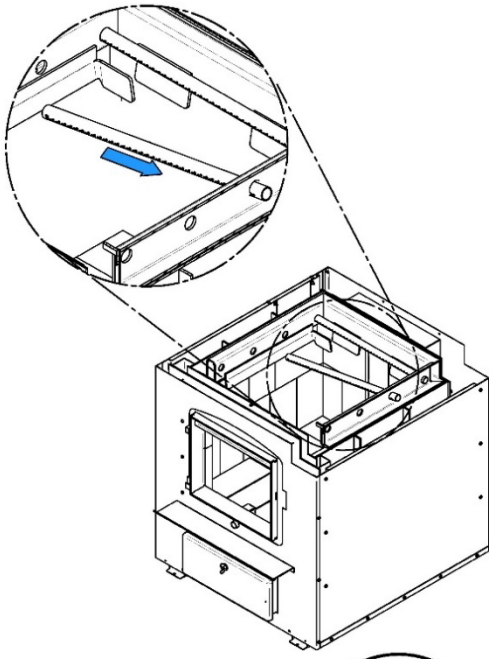

1- Starting with the rear tube, tilt and insert the right end of the secondary air tube into the rear right channel hole. Then lift and insert the left end of the tube into the rear left channel.

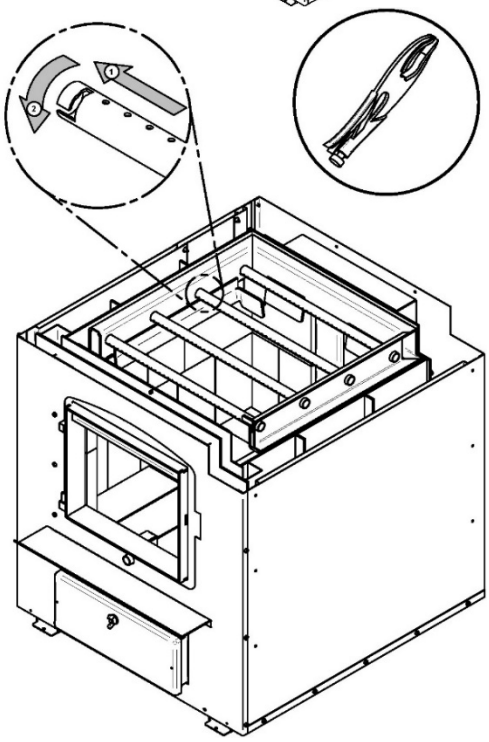

2- Align the notch in the left end of the tube with the keyhole of the left air channel. Using a “vise-grip” pair of pliers hold the tube and lock it into place by turning the tube as shown. Make sure the notch reaches the end of the keyway.
3- Repeat **step 1** & **2** for the other secondary air tubes.
4- To remove the tubes, use the above steps in reverse order.

22. TROUBLESHOOTING

In the event of a technical problem, the first thing you can do is a self-diagnostic test to speed up the process with the technical support department.

SELF-DIAGNOSTIC PROCESS	
1.	Press the LED button and maintain pressure until the LED lights up. • The light should be solid green (does not blink)
2.	The self-diagnostic process will engage with the following results for the LED button: • Blink 1x: Top Thermocouple (Baffle) is problematic. • Blink 2x: Bottom Thermocouple (Combustion chamber) is problematic. • Blink 4x: RTD is problematic. • Blink 8x: Electronic board is problematic. • Does not blink: No problem
3.	Press the LED button, the air intake motors test will begin: • Blink 1x: Primary motor is problematic. • Blink 2x: Grill motor is problematic
4.	Press the LED button, the air distribution blower test begins (all the blower speeds will be automatically tested) • Listen to the blower speed
5.	Press the LED button to end the self diagnostic test.

When you have issues with your furnace, your first reaction may be to call technical support. This section will help you save time and money by enabling you to solve simple problems by yourself.

Most **common problems are generally caused by the following five factors**:

- Wrong operation or lack of maintenance
- Bad installation
- Poor quality combustible
- Component failure
- Factory defect

IF YOU NEED TO CONTACT YOUR DEALER OR TECHNICAL SUPPORT, MAKE SURE TO HAVE THE MODEL OF YOUR APPLIANCE AND SERIAL NUMBER ON HAND. (THEY CAN BE FOUND ON THE CERTIFICATION LABEL ON THE SIDE OF THE FURNACE).
WARNING! RISK OF ELECTRIC SHOCK. IF YOU NEED TO MANUALY TEST, HANDLE OR REPLACE A COMPONENT, THE FURNACE MUST BE DISCONNECTED FROM ITS POWER SUPPLY.

PROBLEMS	CAUSES	SOLUTIONS
▪ Does not heat well during the initial. combustions. ▪ Lack of draft.	If installed, improper adjustment of the barometric damper (opened too wide). Chimney flue restriction (too long, 90° elbows).	▪ Adjust the barometric damper. ▪ Minimize the smoke pipe length and use 45° elbows
▪ Furnace burns well, warm air plenum is very hot but there is little heat coming out into the rooms	Incorrect configuration of distribution or return lines, low static pressure, unbalanced system (too many warm air outlets and not enough fresh air return).	▪ Reconfigure distribution and return lines to respect the minimum static pressure of 0.20 in. W.C. (50 Pa) in the plenum
▪ Furnace consumes a lot of wood.	The thermostat always calls for heat or is too close to a source of cold air or there is little heat where it is located. Air controls not properly adjusted. Home poorly insulated. Furnace door or ash drawer door not airtight. Furnace is too small for the surface to be heated. Unbalanced ventilation system.	▪ Relocate the thermostat. ▪ Rebalance the ventilation system to increase the air flow in the room where the thermostat is located. ▪ Check air intake controls, furnace door and ash drawer door for leaks.

▪ High creosote content, moderate heat output.	Wet wood, lack of draft. Barometric damper not properly adjusted. Restriction in the furnace or chimney.	▪ Use dry wood. ▪ Adjust the barometric damper. ▪ Clean the chimney, flue pipe and the furnace heat exchangers
▪ Furnace heats a lot, but the warm air duct remains lukewarm.	Damp or poor-quality wood. Fresh air return too great for warm air ducts. Unbalanced ventilation system. No static pressure.	▪ Use dry wood. ▪ Reconfigure the ventilation system to respect the minimum static pressure of 0.20 in. W.C. (50 Pa) in the plenum.
▪ Reload button LED blinking fast	Unit is overheating.	▪ Leave the door closed, do not add more wood, and wait for the end of combustion. ▪ Check furnace and ash drawer doors as well as air intake controls for leaks. ▪ Excessive chimney draft.
▪ Primary air intake controls always remain closed.	Furnace is not plugged-in, or an electrical component is defective.	▪ Make sure the furnace is plugged-into a working outlet. ▪ Test and replace, if necessary, control switch, thermostat, and/or air control motor

23. OPTIONAL ACCESSORIES

The following accessories can be paired with the CADDY ADVANCED CR furnace.

#	DESCRIPTION
PA01106	ELECTRIC HEATING ELEMENTS 10-20 kW
PA03060	CONTROL UNIT AND OPTIONAL ADD-ON MODULES
PA08555	ANGLED SUPPORT DUCT
PA08581	PSC AIR BLOWER FAN
PA08582	ECM AIR BLOWER FAN
PA08587	LATERAL EXTENSION FOR BLOWER FAN
PA08588	TOP AIR RETURN PLENUM
PA08589	SIDE EXTENSION FOR ANGLED SUPPORT
PA08591	HEAT PUMP HARNESS
PA08592	CONNECTION PLATE FOR THE DETTSON GAS FURNACE
PA08593	CONNECTION PLATE FOR THE NAPOLEON / CONTINENTAL GAS FURNACE

24. EXPLODED DIAGRAM AND PARTS LIST

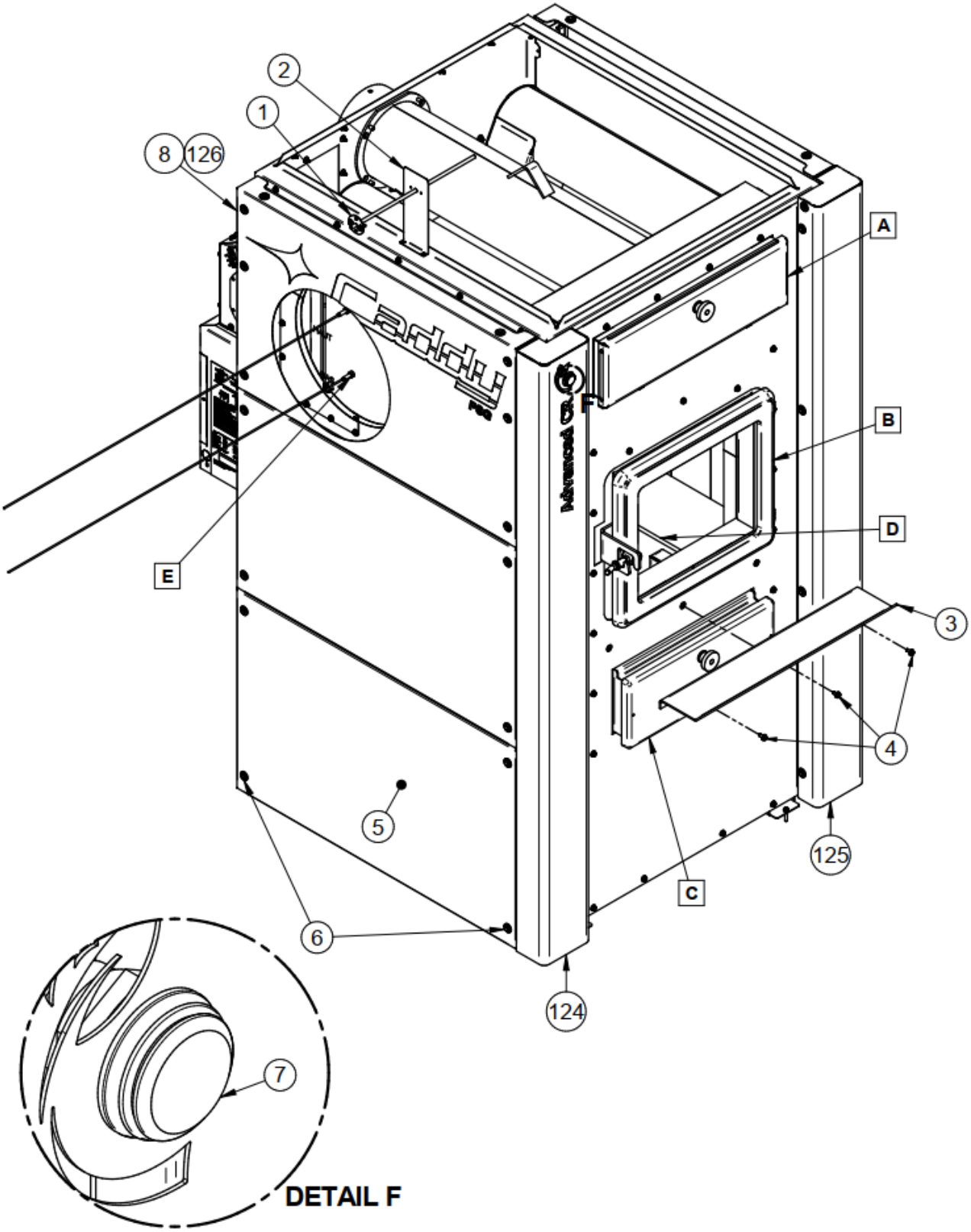

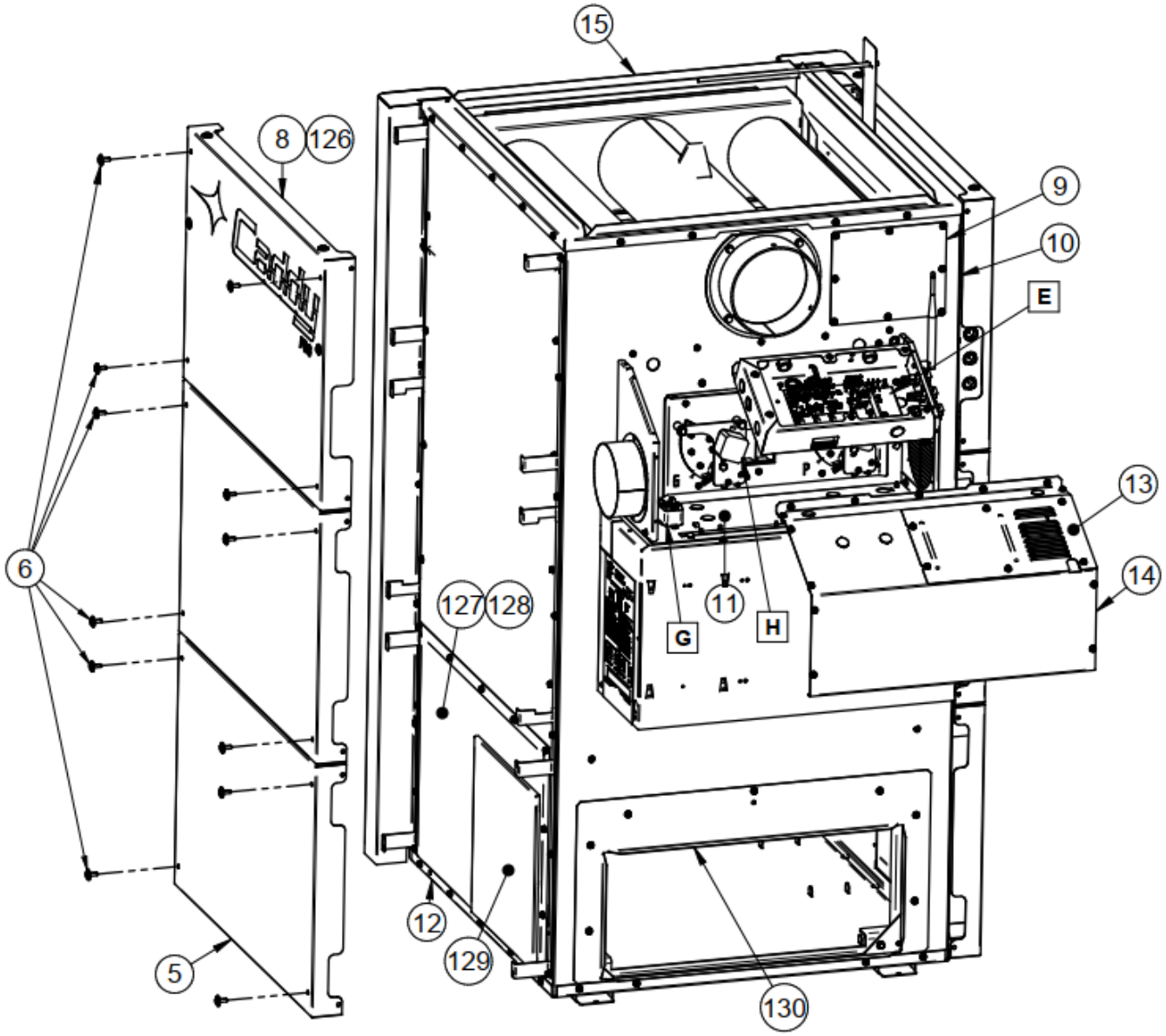
15
8
126
9
10
E
13
14
6
127
128
11
G
H
12
129
5
130

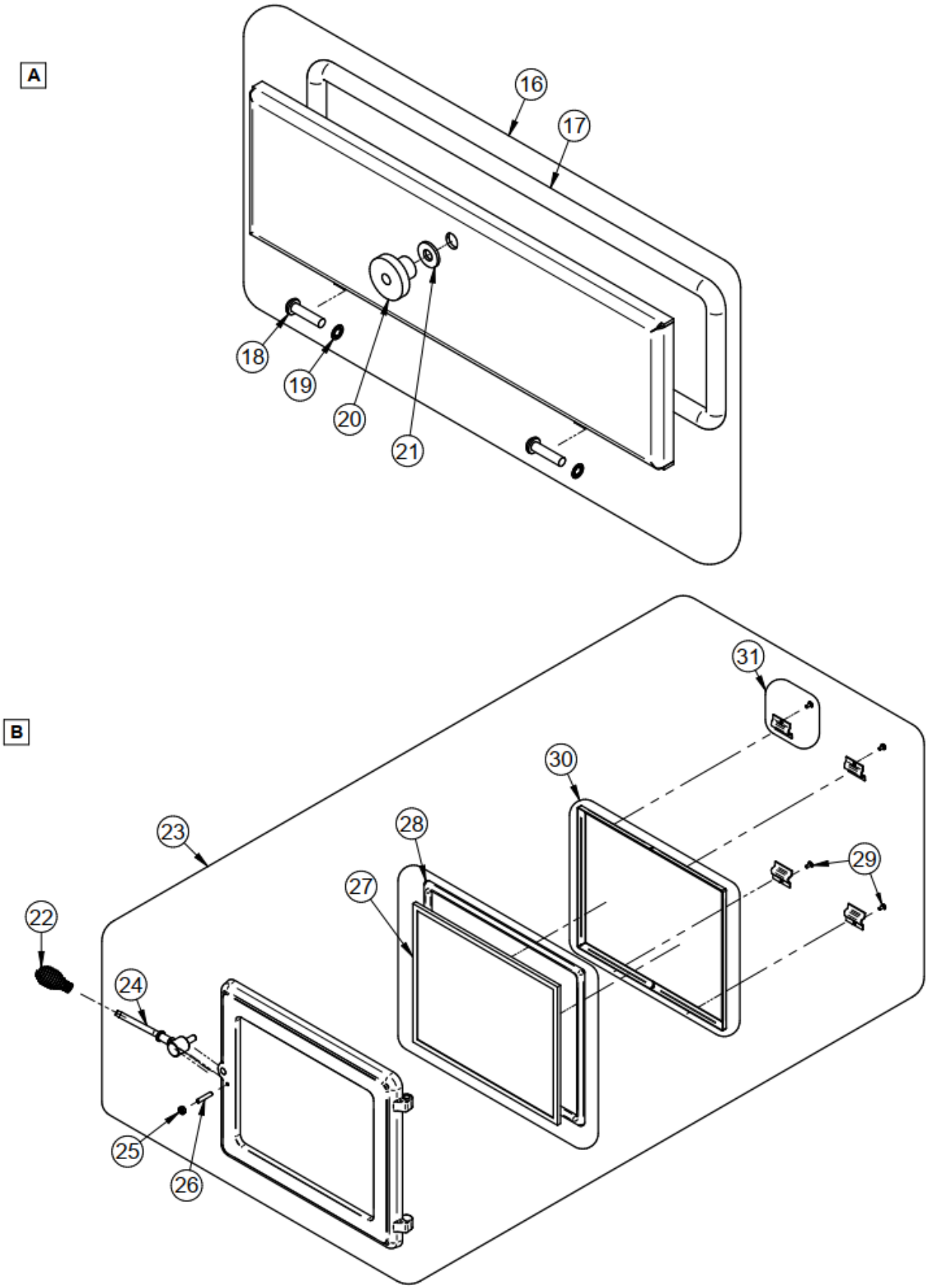
A
16
17
18
19
20
21
B
22
23
24
25
26
27
28
29
30
31

C

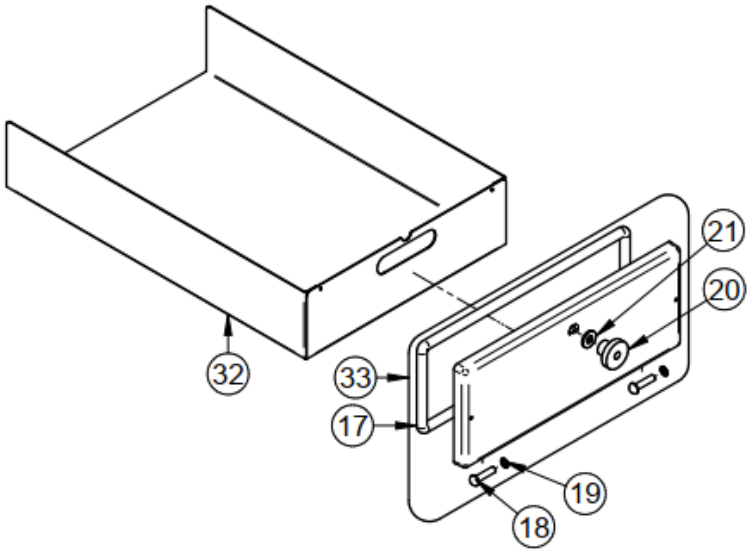

D

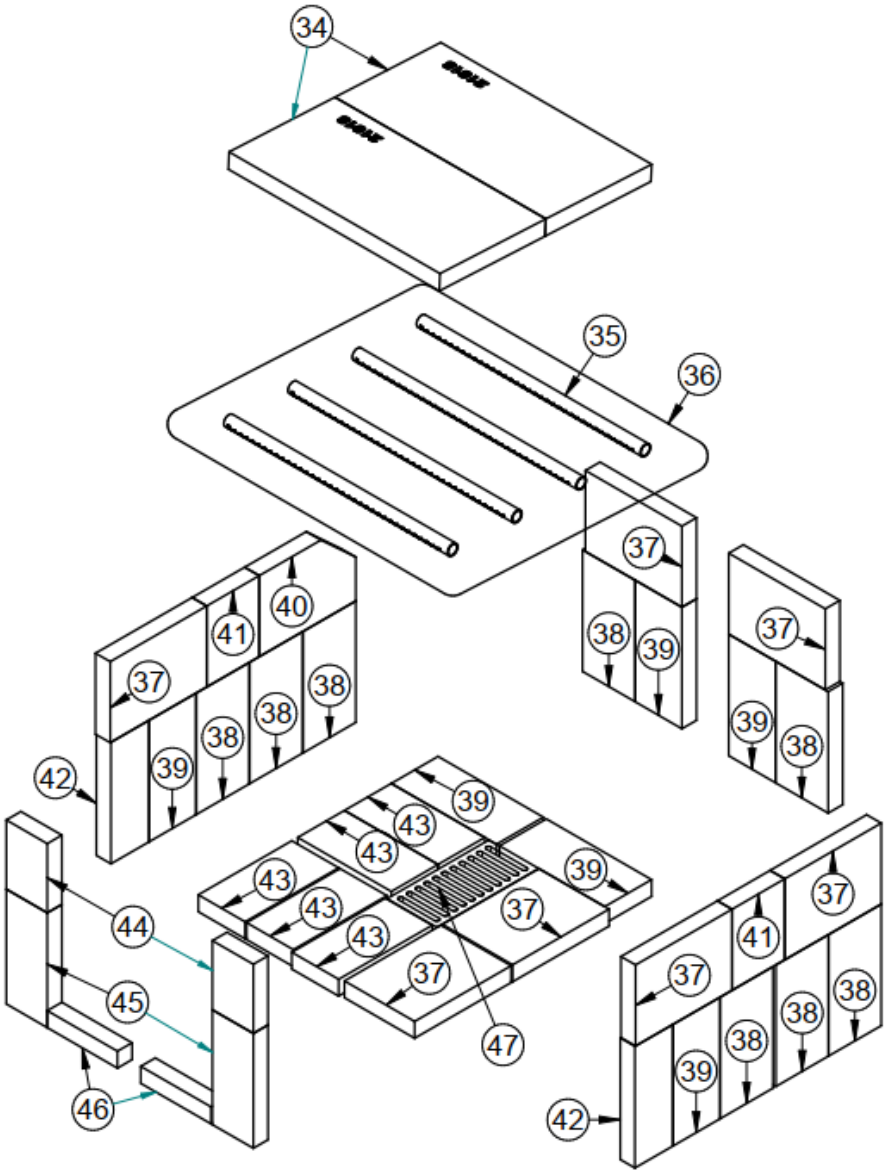

E

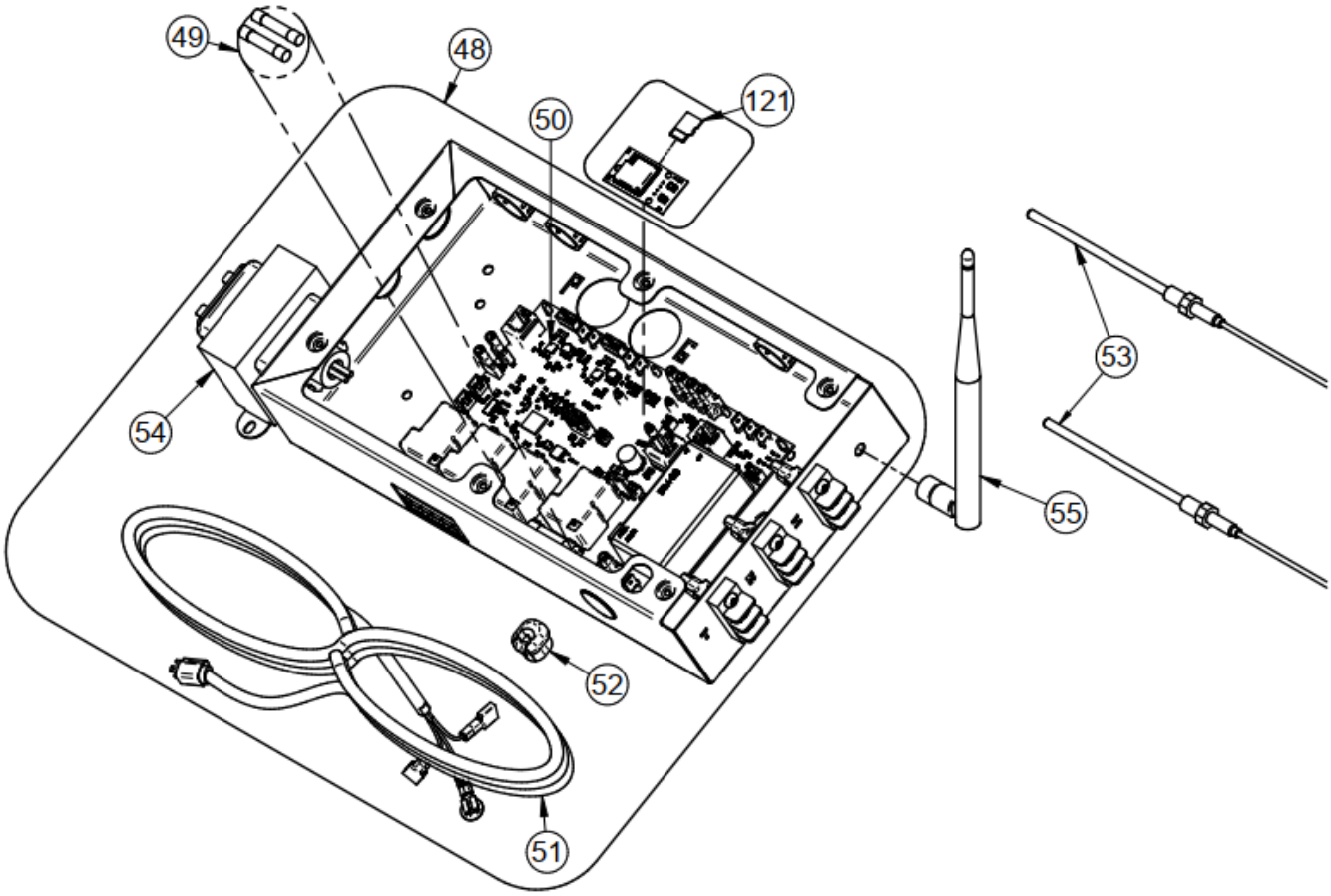

G

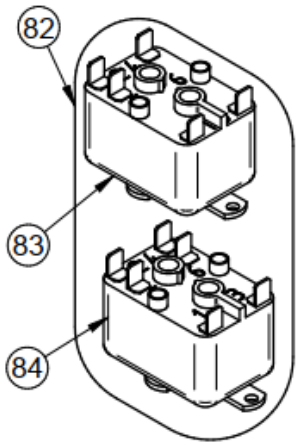

H

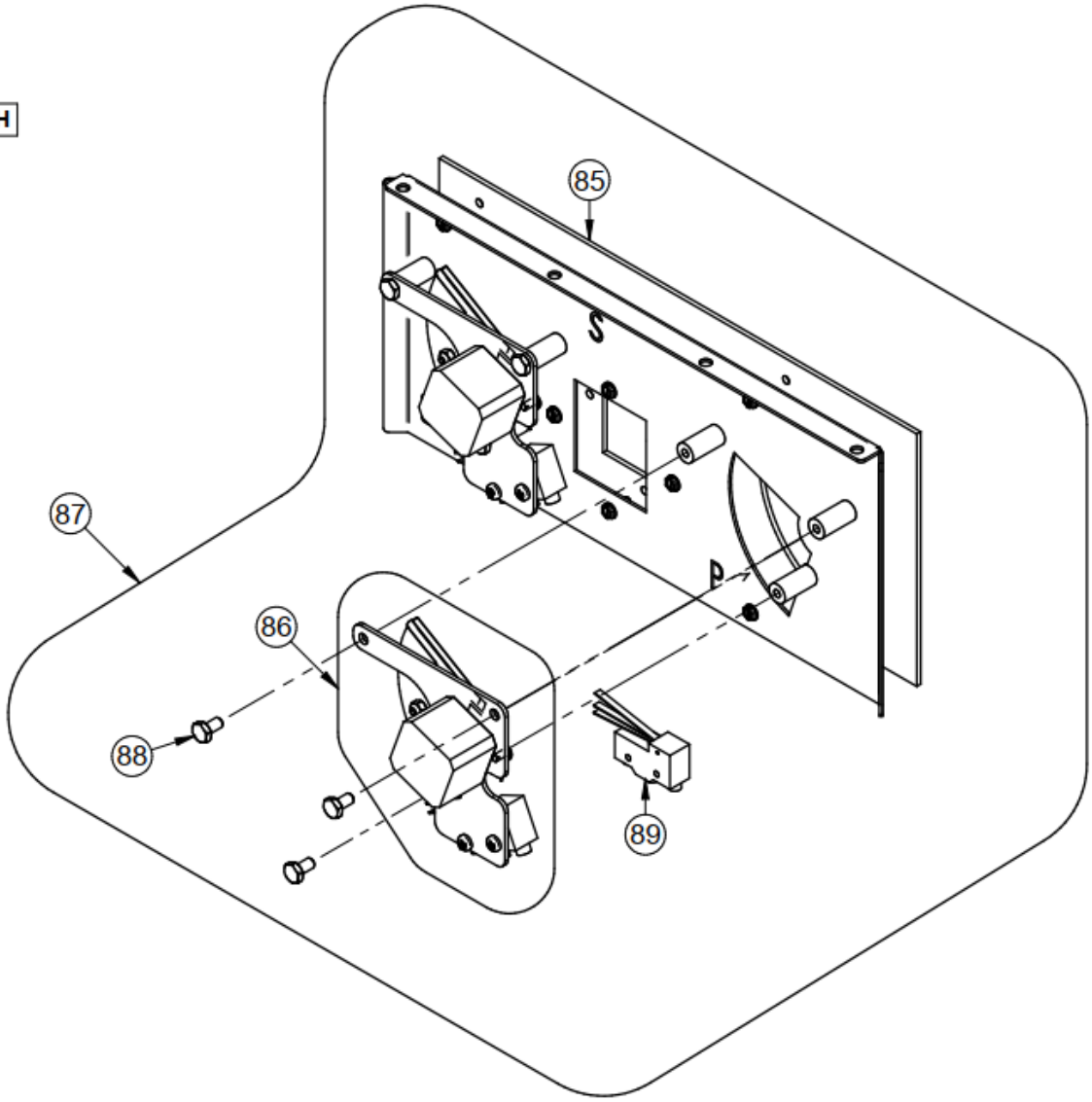

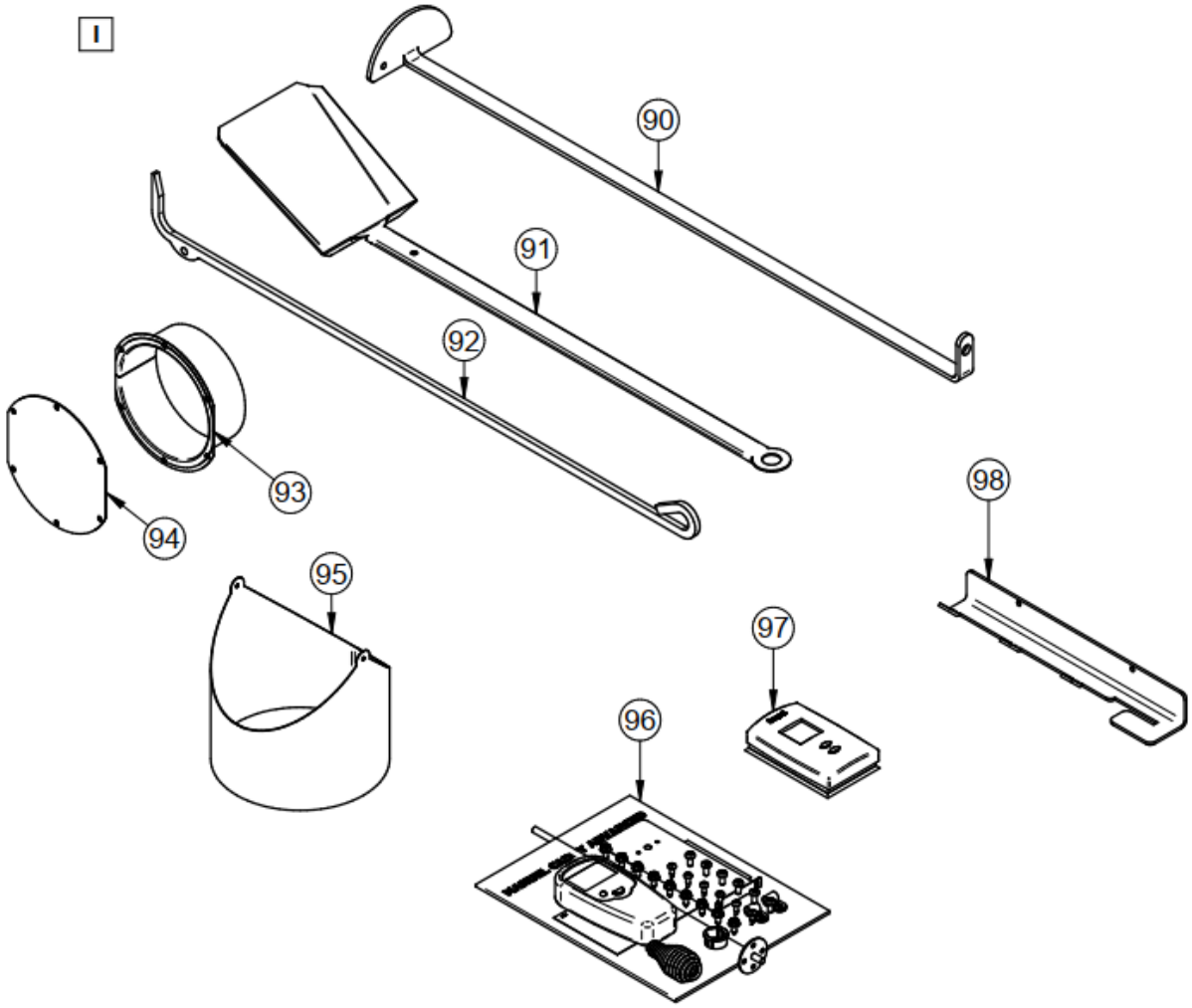
I
90
91
92
93
94
95
96
97
98

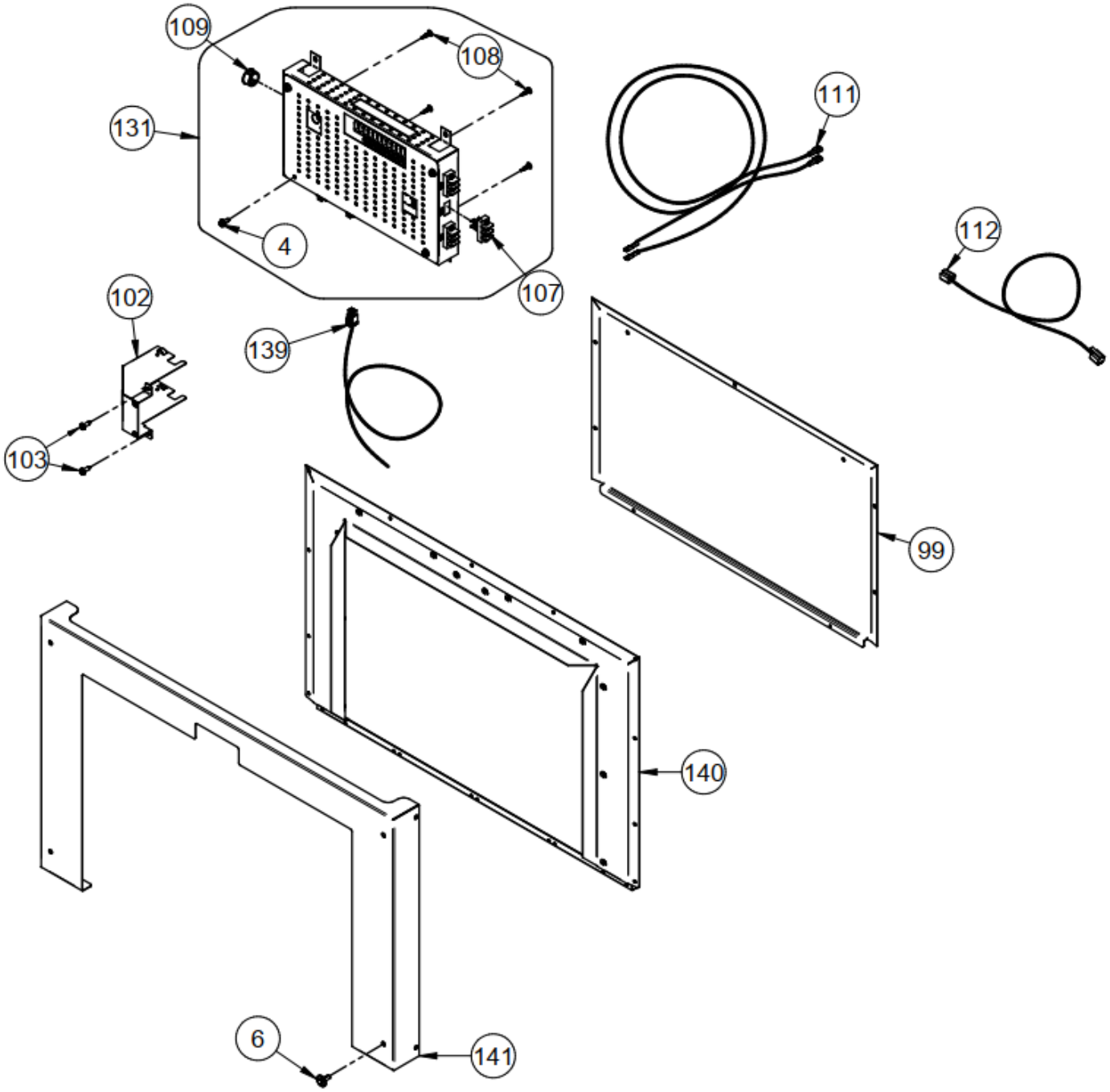
109
108
131
111
4
107
112
102
139
103
99
140
6
141

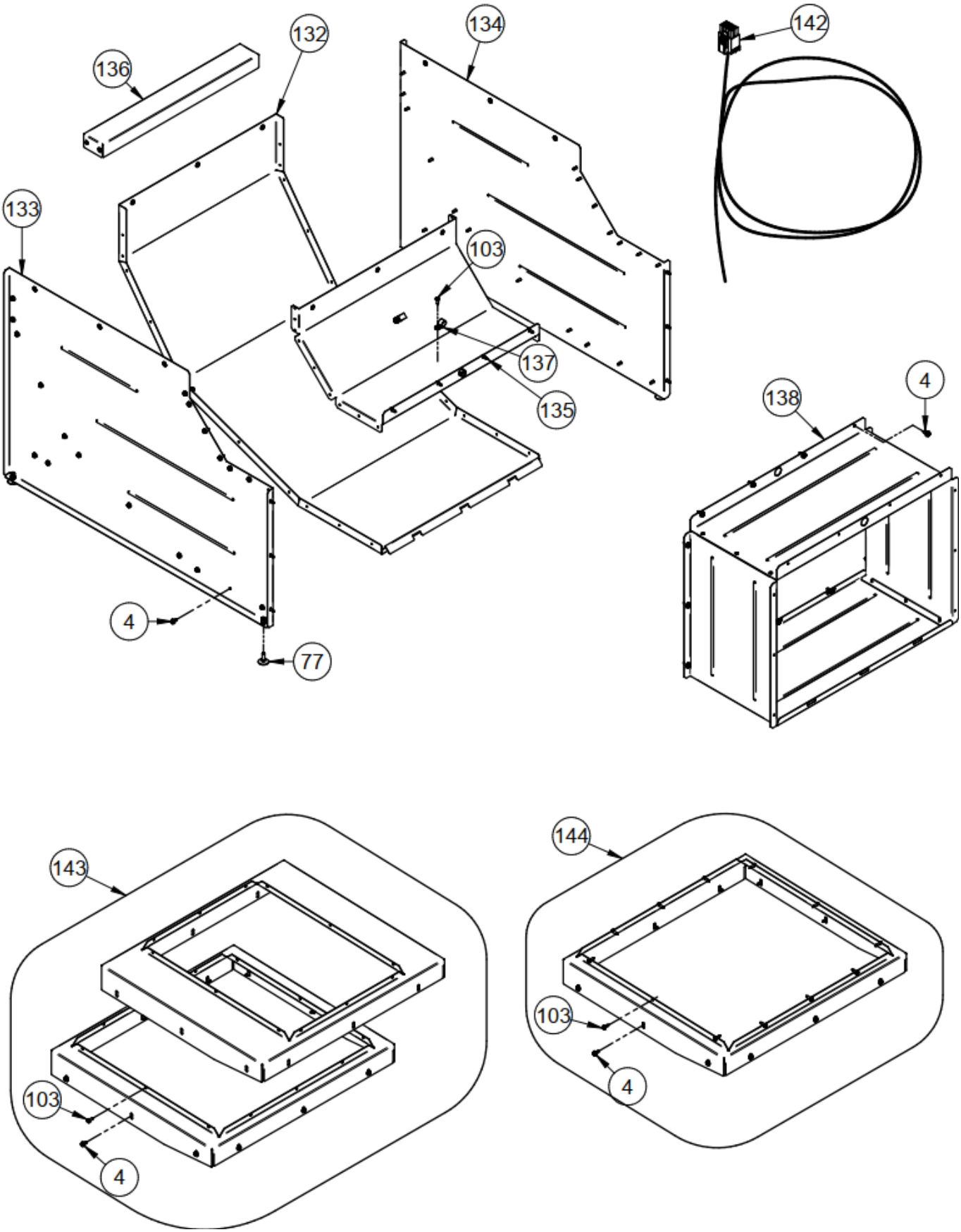
132
134
142
136
133
103
137
135
138
4
4
77
143
144
103
4
103
4

IMPORTANT: THIS INFORMATION IS UP TO DATE. When requesting service or replacement parts for your furnace, please provide the model and the serial number. We reserve the right to change parts due to technology upgrade or availability. Contact an authorized dealer to obtain any of these parts. Never use substitute materials. Use of non-approved parts can result in poor performance and safety hazards.

#	PART	DESCRIPTION	Qty
1	44096	100 OHM RTD PROBE 38" WIRE	1
2	PL48258	RTD SUPPORT BRACKET	1
3	PL56276	ASH SHELF	1
4	31048	SCREW #10 X 1/2 HWH PH TYPE AB ZINC PLATED/BLACK PAINT	10
5	PL66296	DECORATIVE PANEL	1
6	31366	PUSH IN RIVET	4
7	44241	SWITCH PUSH SPST-NO 10A 14V	1
8	PL66297	CADDY DECORATIVE PANEL	1
9	PL66211	THERMOCOUPLE ACCESS PANEL	1
10	PL66278	FURNACE'S BACK	1
11	SE66231	ASSEMBLED AIR INTAKE SUPPORT	1
12	SE66160	AIR JACKET FLOOR ASSEMBLY	1
13	PL66239	ACCESS PANEL ELECTRONIC BOARD	1
14	PL66238	MOTOR CASING	1
15	PL66287	JACKET TOP	1
16	SE66176	HEAT EXCHANGER ACCESS DOOR	1
17	AC06900	BLACK ROUND GASKET 1/2'' X 9' WITH ADHESIVE KIT	2
18	30168	HINGE PIN 5/16"Ø X 1 1/4"L	4
19	30055	HINGE PIN RETAINING RING 5/16" ID X 0.512" OD	4
20	30799	STEEL ROUND KNOB, 3/8"-16 THREADED	2
21	30210	WASHER 29/32" OD X 3/8" ID ZINC	2
22	AC07869	3/8" BLACK COIL HANDLE	1
23	SE24008-01	CAST IRON DOOR WITH HANDLE	1
24	AC09151	REPLACEMENT HANDLE KIT	1
25	30100	BLACK HEX NUT 1/4 - 20 (NON-OILED)	1
26	30128	1/4"-20 X 1 1/4" SOCKET SET SCREW	1
27	SE51352	13 1/8"W X 10 7/8"H GLASS WITH GASKET	1
28	AC06725	GLUE AND 3/4" X 7' WHITE DOOR GASKET KIT	1
29	30124	MECHANICAL SCREW #8-32 X5/16" TRUSS QUADREX #2 ZINC	4
30	SE51349	GLASS RETAINER KIT	1
31	SE51351	GLASS RETAINER FIXING KIT FOR FRAME	1
32	PL66175	ASH DRAWER	1
33	SE48054	HEAT EXCHANGER ACCESS DOOR	1
34	21618	C-CAST FIREWALL - 9.062" X 13.031" X 1.250"	2
35	PL66163	SECONDARY AIR TUBE	4
36	SE66163	SECONDARY AIR TUBES KIT	1
37	29005	6" X 8 1/4" X 1 1/4'' REFRACTORY BRICK HD	7
38	29020	4 1/2'' X 9'' X 1 1/4'' REFRACTORY BRICK HD	8
39	29011	4'' X 9" X 1 1/4" REFRACTORY BRICK HD (AC-SB)	6
40	PL66192	6'' X 8 1/4'' X 3 1/4'' X 5 17/64'' HD REFRACTORY BRICK	1

#	PART	DESCRIPTION	Qty
41	PL66190	HD 4 1/2'' X 6'' X 1 1/4'' REFRACTORY BRICK	2
42	PL36102	3 1/4" X 9'' REFRACTORY BRICK	2
43	29001	4'' X 8'' X 1 1/4'' REFRATORY BRICK HD	5
44	PL36116	3 1/2" X 5 1/8'' X 1 1/4'' REFRACTORY BRICK	2
45	PL36266	3 1/2" X 8 1/2" X 1 1/4" REFRACTORY BRICK	2
46	PL66191	1 1/4'' X 6'' X 1 1/4'' HD REFRACTORY BRICK	2
47	24089	CAST IRON ASH GRATE 4 1/2" X 9"	1
48	SE66336	CONTROL BOARD ASSEMBLY	1
49	SE44137	CADDY ADVANCED FUSES KIT	1
50	SE44265	ASSEMBLED ELECTRONIC BOARD	1
51	60013	POWER CORD 96" X 18-3 type SJT (50 pcs per carton)	1
52	60008	BLACK NYLON BUSHING	1
53	60413	TYPE K UNGROUNDED THERMOCOUPLE	2
54	SE60368	TRANSFORMER KIT	1
55	SE44309	ANTENNA KIT	1
75	SE28062	HANDLE AND SCREW KIT	1
76	21367	CARDBOARD AIR FILTER 25" X 14" X 2"	1
77	30536	LEVELING BOLT 1/4 - 20 X 1''	2
78	30710	SPRING CLIP	4
79	PL66353	ADAPTER FOR 1" FILTER	2
80	30154	BLACK ZINC SCREW #10 X 5/8" QUADREX #2 TYPE A	1
81	60461	FURNACE FAN RETROFIT HARNESS	1
82	PA08523	WIRING KIT FOR SERIAL INSTALLATION	1
83	51035	90-370 FAN RELAY	1
84	51019	FAN RELAY 90-382 6 PINS	1
85	21621	AIR ENTRY HATCH GASKET	1
86	SE66194	DAMPER ASSEMBLY	1
87	SE66193	COMPLETE DAMPER KIT	1
88	30084	BOLT 1/4-20 X 1/2" GRADE 5	3
89	44190	LIMIT SWITCH	1
90	PL48170	HEAT EXCHANGER SCRAPER	1
91	PL48171	ASH SHOVEL	1
92	PL48173	POKER	1
93	SE66198	FRESH AIR INTAKE ADAPTER	1
94	PL66200	AIR INTAKE COVER	1
95	51018	BAROMETRIC DAMPER 6", 7" AND 8"	1
96	SE46245	CADDY ADVANCED MANUAL KIT	1
97	44189	THERMOSTAT	1
98	PL66268	TOOL HOLDER	1
99	PL66310	BLOWER PLUG	1
102	PL66355	WIRE COVER	1
103	30163	SELF DRILLING METAL SCREW #10 X 5/8" HEX TEK	4
107	60036	TERMINAL BLOCK	1
108	31408	ELECTRONIC BOARD CLIP	4

#	PART	DESCRIPTION	Qty
109	30412	SNAP-IN BUSHING 7/8in.	1
111	60024	B-VENT WIRE	2
112	60462	ETHERNET CABLE	1
121	PL44312	MICROSD CARD PROGRAMMED FOR CONNECTED FURNACE	1
124	PL66295	LEFT DECORATIVE COLUMN	1
125	PL66299	RIGHT DECORATIVE COLUMN	1
126	PL66300	UPPER RIGHT DECORATIVE PANEL	1
127	PL66302	RIGHT ACCESS JACKET PANEL	1
128	PL66303	LEFT ACCESS JACKET PANEL	1
129	PL66293	COVER ELECTRICAL UNIT	1
130	PL66235	BLOWER ADAPTOR	1
131	SE66322	SUB-ASSEMBLY OF ELECTRONIC LINK BOARD	1
132	PL66360	LOWER PART OF ANGLED CONDUIT	1
133	PL66361	LEFT SIDE OF ANGLED CONDUIT	1
134	PL66362	RIGHT SIDE OF ANGLED CONDUIT	1
135	PL66363	TOP OF ANGLED CONDUIT	1
136	PL66364	CONDUIT STIFFENER	1
137	31389	WIRE CLIP	1
138	SE66365	ANGLED BRACKET EXTENSION CONDUIT	1
139	60473	GAS FURNACE HARNESS	1
140	PL66370	ANGLED BRACKET CONNECTOR	1
141	PL66367	ANGLED BRACKET DECORATIVE PANEL	1
142	PA08591	HEAT PUMP HARNESS	1
143	PA08592	CONNEXION PLATE FOR DETTSON GAS FURNACE	1
144	PA08593	CONNEXION PLATE FOR NAPOELON / CONTINENTAL GAS FURNACE	1

25. ELECTRICAL DIAGRAM FOR STAND-ALONE FURNACE

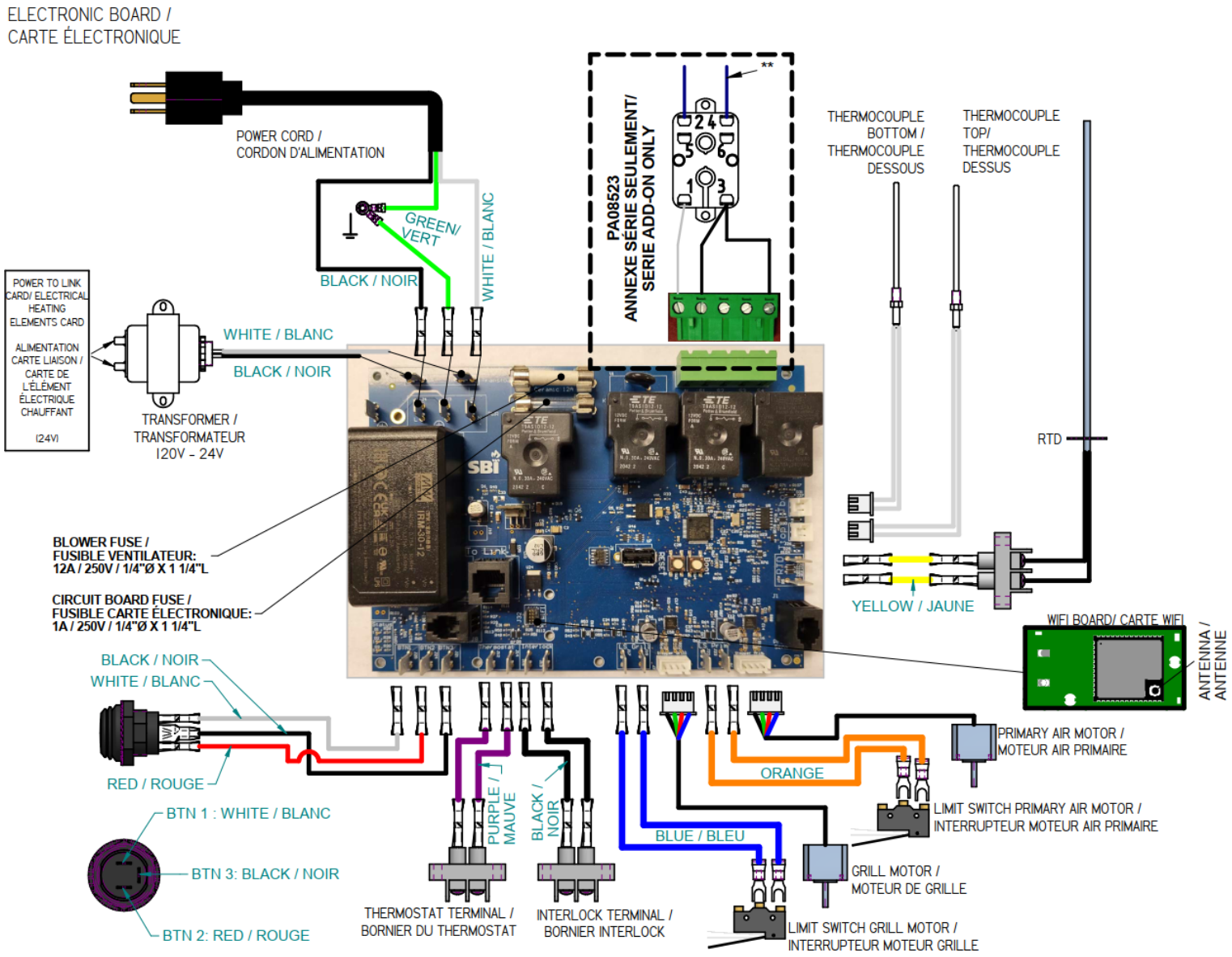

26. WHY PURCHASE THROUGH AN AUTHORIZED CADDY DEALER?

To make sure your Caddy furnace provides comfort and energy savings in your home for many years, your choice of installer is extremely important. An authorized Caddy dealer will ensure that the system is optimized and installed according to standards. Given the importance of the installation, Caddy recommends that it is carried out by a professional certified in the Building Code so that the furnace delivers its full potential.

If you want to enjoy the best service on the market and substantial savings on heating costs, there is only one choice: an Authorized Caddy Dealer.

CADDY LIMITED WARRANTY

The warranty of the manufacturer extends only to the original consumer purchaser and is not transferable. This warranty covers brand new products only, which have not been altered, modified nor repaired since shipment from factory. Proof of purchase (dated bill of sale), model name and serial number must be supplied when making any warranty claim to your Caddy dealer.

This warranty applies to normal residential use only. Damages caused by misuse, abuse, improper installation, lack of maintenance, over firing, negligence or accident during transportation, power failures, downdrafts, or venting problems are not covered by this warranty.

The installation of a heat pump or air conditioning system in the air return can cause condensation, leading to premature aging (corrosion, etc.) of the furnace, which is not covered by the warranty.

This warranty does not cover any scratch, corrosion, distortion, or discoloration. Any defect or damage caused by the use of unauthorized parts or others than original parts void this warranty. An authorized qualified technician must perform the installation in accordance with the instructions supplied with this product and all local and national building codes. Any service call related to an improper installation is not covered by this warranty.

The manufacturer may require that defective products be returned or that digital pictures be provided to support the claim. Returned products are to be shipped prepaid to the manufacturer for investigation. If a product is found to be defective, the manufacturer will repair or replace such defect. Transportation fees to ship the product back to the purchaser will be paid by the manufacturer. All parts costs covered by this warranty are limited according to the table below.

The manufacturer at its discretion may decide to repair or replace any part or unit after inspection and investigation of the defect. The manufacturer may, at its discretion, fully discharge all obligations with respect to this warranty by refunding the wholesale price of any warranted but defective parts. The manufacturer shall in no event be responsible for any special, indirect, consequential damages of any nature, which are in excess of the original purchase price of the product. This warranty applies to products purchased after July 1st 2024

DESCRIPTION	WARRANTY APPLICATION	
	PARTS	LABOUR
Castings, combustion chamber (welds only), castings, and heat exchanger (welds only)	10 years**	3 years***
Stainless steel combustion chamber components, secondary air tubes*, surrounds and heat shields and ash drawer	5 years	1 year***
Carbon steel combustion chamber components, glass retainers, handle assembly, vermiculite, C-Cast or equivalent baffle*	3 years	N/A
Electrical elements, blowers, heat sensors, switches, rheostat, relays, damper motor, fan limit control, PC board, wiring, and other controls	2 years	1 year***
Ceramic glass (thermal breakage only*), paint (peeling), gaskets, insulation, and ceramic fibre blankets	1 year	N/A
Firebrick	N/A	N/A
All parts replaced under the warranty	90 days	N/A

Pictures required** * Parts subjected to a 10 years limit warranty are limited to one replacement during that period, ***** **Applicable only if installed by a professional authorized and accredited by the Building Code**

Shall your unit or a component be defective, immediately contact your Caddy dealer. Prior to your call make sure you have the following information necessary to your warranty claim treatment:

- ✓ Your name, address and telephone number
- ✓ Bill of sale and dealer's name
- ✓ Installation configuration
- ✓ Nature of the defect and any relevant information
- ✓ Serial number and model name as indicated on the nameplate fixed to the back of your unit.

Before shipping your unit or defective component to our plant, you must obtain, from your Caddy dealer, an Authorization Number. Any merchandise shipped to our plant without authorization will be refused automatically and returned to sender.