Installation and Operation Manual

INSPIRE 2000-I INSERT

(**OB02045 Model**)

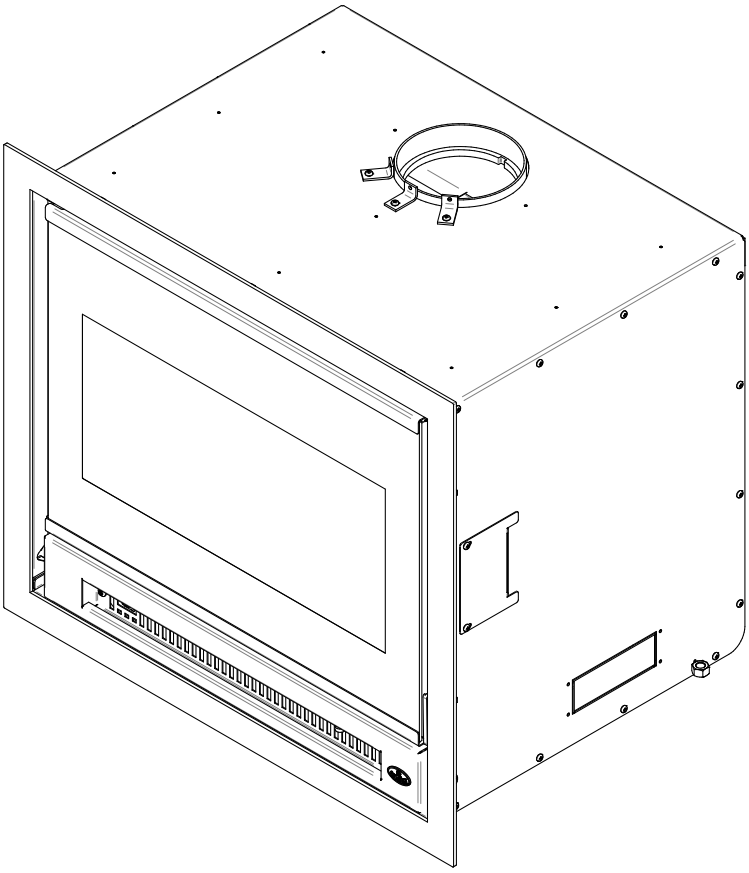

Safety tested according to
ULC 628, UL 1482 and UL 737
by an accredited laboratory.

EPA
≤2.5 g/h

US Environmental Protection Agency
phase II certified wood insert compliant
with 2020 cord wood standard.

CONTACT LOCAL BUILDING OR FIRE OFFICIALS ABOUT RESTRICTIONS AND INSTALLATION INSPECTION REQUIREMENTS IN LOCAL AREA.

READ THIS ENTIRE MANUAL BEFORE INSTALLATION AND USE OF THIS WOOD INSERT. FAILURE TO FOLLOW THESE INSTRUCTIONS COULD RESULT IN PROPERTY DAMAGE, BODILY INJURY OR EVEN DEATH.

READ AND KEEP THIS MANUAL FOR REFERENCE

Printed in Canada

45952A
2025-12-02

THANK YOU FOR CHOOSING THIS WOOD INSERT.

If this insert is not installed properly, combustible materials near it may overheat and catch fire.

To reduce the risk of fire, follow the installation instructions in this manual.

As one of North America's largest and most respected wood stove and fireplace manufacturers, Stove Builder International takes pride in the quality and performance of all its products.

The following pages provide general advice on wood heating, detailed instructions for safe and effective installation, and guidance on how to get the best performance from this insert.

It is highly recommended that this wood burning hearth product be installed and serviced by a "Qualified Agency" such as NFI (National Fireplace Institute) or CSIA (Chimney Safety Institute of America) in the United States, in Canada by WETT (Wood Energy Technical Training) and in Quebec by APC (Association des Professionnels du Chauffage).

Contact local building or fire officials about restrictions and installation inspection requirements in the area.

A building permit might be required for the installation of this insert and the chimney that it is connected to. It is also recommended to inform your home insurance company.

Please read this entire manual before installing and using this insert.

A primary alternative heat source should be available in the home. This heating unit may serve as a supplementary heat source. The manufacturer cannot be responsible for additional heating costs associated with the use of an alternative heat source.

ONLINE WARRANTY REGISTRATION

If the unit requires repairs during the warranty period, proof of purchase must be provided. The purchase invoice must be kept. The date indicated on it establishes the warranty period. If it cannot be provided, the warranty period will be determined by the date of manufacture of the product.

It is also highly recommended to register the warranty online at

https://www.osburn-mfg.com/en/warranty/warranty-registration/

Registering the warranty will help to quickly find the information needed on the unit.

TABLE OF CONTENTS

PART A - OPERATION AND MAINTENANCE 7

1. Safety Information 7

2. General Information 8

2.1 Performances 8
2.2 Specifications 9
2.3 Dimensions 10
2.4 EPA Loading Procedure 11
2.5 Materials 15
2.6 Zone Heating 16
2.7 Emissions and Efficiency 16

3. Fuel 17

3.1 Tree Species 17
3.2 Log Length 18
3.3 Piece Size 18
3.4 Compressed Wood Logs 18
3.5 Drying Time 18

4. Operating the Insert 19

4.1 Cold Hand 20
4.2 Blower Operation 20

5. Burning Wood Efficiently 21

5.1 First Use 21
5.2 Lighting Fires 21
5.3 Combustion Cycles 22
5.4 Rekindling a Fire 23
5.5 Removing Ashes 23
5.6 Air Intake Control 24
5.7 Fire Types 24

6. Maintenance 26

6.1 Insert 27
6.2 Glass Door 27
6.3 Door 29
6.4 Exhaust System 32

PART B - INSTALLATION 33

7. Masonry Fireplace Requirements 33

8. Safety Information and Standards 33

8.1 Regulations Covering Insert Installation 34
8.2 Certification Label 34

8.3 Masonry Fireplace Throat Damper 34
9. Clearances to Combustible Material 35
9.1 Installation of a Combustible Mantel Shelf 35
9.2 Floor Protection 36
9.3 Minimum Masonry Opening and Clearances to Combustibles 39
10. The Venting System 40
10.1 General 40
10.2 Block-off Plate 40
10.3 Suitable Chimneys 40
10.4 Chimney Liner Installation 41
10.5 Liner Connection 41
10.6 Minimum Chimney Height 43
10.7 Chimney Location 43
10.8 Supply of Combustion Air 44
Appendix 1. Faceplate Installation 45
Appendix 2. Optional Fresh Air Intake Kit Installation 46
Appendix 3. Blower Replacement 47
Appendix 4. Air Tubes and Baffle Installation 51
Appendix 5. Log retainers installation 53
Appendix 6. Optional Refractory Panels Installation 54
Appendix 7. Removal Instructions 58
Appendix 8. Exploded Diagram and Parts List 59
OSBURN LIMITED LIFETIME WARRANTY 62

Dealer: _____

_____

Installer: _____

_____

Phone Number: _____

Serial Number: _____

CERTIFICATION PLATE

REFER TO INTERTEK'S DIRECTORY OF BUILDING PRODUCTS FOR DETAILED INFORMATION
SE RÉFÉRER AU RÉPERTOIRE DES PRODUITS HOMOLOGUÉS D'INTERTEK POUR PLUS D'INFORMATION

C ETL LISTED US

Intertek
Control number: 4002461
(March/Mars 2018)

STANDARDS / NORMES D'ESSAI:
Certified to / Certifié selon ULC S628
Certified to / Certifié selon UL 1482
Certified to / Certifié selon UL 737
Certified to/Certifié selon CSA B415.1
Certified to/Certifié selon ASTM E3053
Certified to/Certifié selon ASTM E2515

LISTED SOLID FUEL BURNING INSERT APPLIANCE
APPAREIL ENCASTRABLE À COMBUSTIBLE SOLIDE HOMOLOGUÉ

MODEL / MODÈLE :
INSPIRE 2000-I

Serial Number
No. de Série: 1

Clearances to combustibles / Dégagements aux combustibles

Measured from door opening
Mesuré à partir de l'ouverture de porte

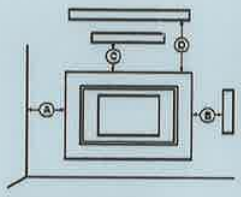

Combustible side wall / Mur côté adjacent	A: 16 in./po.	(406 mm)
Combustible side surround / Parement latéral combustible	B: 9 in./po.	(229 mm)
Combustible top surround / Parement supérieur combustible	C: 27 in./po.	(686 mm)
Combustible mantle shelf / Tablette combustible	D: 27 in./po.	(686 mm)

Floor protection/Protection de plancher

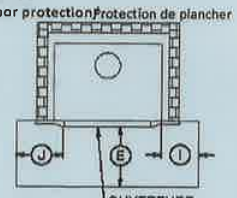

Blower / Ventilateur:
115VOLTS, 0.8 AMPS, 60Hz

Floor - Ceiling / Plancher - Plafond: 84 in./po. (213 cm)

E: 16 in./po.	(406 mm)	USA
18 in./po.	(457 mm)	CANADA
I: 8 in./po.	(203 mm)	CANADA
J: 8 in./po.	(203 mm)	USA

PREVENT HOUSE FIRES

- Install and use only in accordance with the manufacturer's installation and operating instructions.
- Contact local building or fire officials about restrictions and installation inspection in your area.
- Use with solid wood fuel only. Do not use other fuels.
- Risk of smoke and flame spillage. Operate only with door closed. Open door only to reload the stove.
- Do not connect this unit to a chimney serving another appliance.
- Install only in masonry fireplaces. Do not remove bricks or mortar from masonry fireplace.
- This stove must be installed as a freestanding heater with the clearances listed in the manufacturer's installation instructions. It is strictly forbidden to install this stove in a factory-built fireplace.
- The non-combustible floor protection in front of the unit should have an R value equal or greater than 1.00 extending 23 inches (584 mm) in front of the insert if the hearth elevation is lower than 5 inches (127 mm) or extend 16 inches (406 mm) (USA), 18 inches (457 mm) (CANADA) without a R value if the hearth elevation is higher than 5 inches (127 mm).
- Connect to a code-approved masonry chimney or listed factory-built fireplace chimney with a direct flue connector into the first chimney liner section.
- Do not overfire. If stove or chimney connector glows, your are overfiring.
- Inspect and clean chimney frequently. Under certain conditions of use, creosote buildup may occur rapidly.
- Do not use grate or elevate fire. Build wood fire directly on hearth.
- Replace glass only with ceramic glass.
- This wood heater needs periodic inspection and repair for proper operation. Consult the owner's manual for further information. It is against US federal regulations to operate this wood heater in a manner inconsistent with the operating instructions in the owner's manual.

PRÉVENEZ LES INCENDIES

- Installer et utiliser conformément au manuel d'utilisation du fabricant.
- Contacter les autorités de votre localité ayant juridiction concernant les restrictions et inspections d'installation.
- Utiliser avec le bois seulement. Ne pas utiliser d'autres combustibles.
- Risque de fuite de fumée et de flammes. Utiliser l'appareil la porte fermée uniquement. Ouvrir la porte seulement lors du chargement.
- Ne pas raccorder à un conduit de fumée servant déjà pour un autre appareil.
- Installer seulement dans un foyer de maçonnerie. Ne pas enlever les briques ou le mortier du foyer de maçonnerie.
- Ce poêle doit être installé comme appareil de chauffage autonome avec les dégagements indiqués dans les instructions d'installation du fabricant. Il est strictement défendu d'installer ce poêle dans un foyer préfabriqué.
- La protection de plancher incombustible au devant de l'encastrable devrait avoir un facteur d'isolation R égal ou supérieure à 1.00 et se prolonger 23 pouces (584 mm) au devant de l'appareil lorsque l'âtre possède moins de 5 pouces (127 mm) d'élévation et se prolonger 16 pouces (406 mm) (USA), 18 pouces (457 mm) (CANADA), sans facteur d'isolation R au devant de l'encastrable lorsque l'âtre possède plus de 5 pouces (127 mm) d'élévation.
- Raccorder à une cheminée de maçonnerie respectant les codes ou à une cheminée préfabriquée homologuée, directement à la première section de cheminée gainée.
- Ne pas surchauffer. Si l'appareil ou le tuyau rougit, il y a surchauffe.
- Inspecter et nettoyer la cheminée fréquemment. Dans certaines conditions, la formation de créosote peut être rapide.
- Ne pas utiliser de chenets ou de grilles pour élever le feu. Préparer le feu directement sur l'âtre.
- Remplacer la vitre avec un verre de céramique.
- Cet appareil de chauffage requiert des inspections et réparations périodiques. Consulter le manuel de l'utilisateur pour plus d'information. Opérer cet appareil de chauffage de façon inconsistente par rapport au manuel de l'utilisateur consiste une violation de la loi fédérale (USA).

U.S. ENVIRONMENTAL PROTECTION AGENCY Certified to comply with 2020 particulate emission standards using cordwood.
AGENCE DE PROTECTION DE L'ENVIRONNEMENT DES É.-U. Conforme aux normes d'émission de particules de 2020 avec bûche de bois.
Weighted average emission rate / Moyenne pondérée des émissions: 2.3 g/h
Tested and certified in compliance with CFR 40 part 60, subpart AAA, section 60.534(a)(1(ii))

WARNING: This product can expose you to carbon monoxide, which is known to the State of California to cause cancer, birth defects or other reproductive harm.
(For more information go to www.p65warnings.ca.gov)

CAUTION

- HOT WHILE IN OPERATION.
- DO NOT TOUCH. KEEP CHILDREN, CLOTHING AND FURNITURE AWAY.
- CONTACT MAY CAUSE SKIN BURNS. SEE NAME-PLATE AND INSTRUCTIONS.

ATTENTION

- CHAUD EN FONCTIONNEMENT.
- NE PAS TOUCHER. GARDER LES ENFANTS, LES VÊTEMENTS ET LES MEUBLES ÉLOIGNÉS.
- UN CONTACT AVEC LA PEAU PEUT OCCASIONNER DES BRÛLURES. VOIR LES INSTRUCTIONS.

R27730

Made in St-Augustin-de-Desmaures (Qc), Canada
05/10/2022 (# test)

SBI
Fabricant de poêles international
Stove Builder International

Fabriqué à St-Augustin-de-Desmaures (Qc), Canada
05/10/2022 (# test)

PART A - OPERATION AND MAINTENANCE

1. Safety Information

- Operate only with the door fully closed. If the door is left partly open, gas and flame may be drawn out of the opening, creating risks from both fire and smoke.

- This insert is not designed to be used with the door open. The door may be open only during lighting procedures or reloading. Do not leave the insert unattended when the door is slightly opened during ignition. Always close the door after ignition.

- **HOT WHILE IN OPERATION, KEEP CHILDREN, CLOTHING AND FURNITURE AWAY. CONTACT MAY CAUSE SKIN BURNS. GLOVES MAY BE NEEDED FOR INSERT OPERATION.**

- Using an insert with cracked or broken components, such as glass, firebricks or baffle may produce an unsafe condition and may damage the insert.

- Open the air control fully before opening the loading door.

- **NEVER USE GASOLINE, LANTERN FUEL (NAPHTHA), FUEL OIL, MOTOR OIL, KEROSENE, CHARCOAL LIGHTER FLUID, OR SIMILAR LIQUIDS OR AEROSOLS TO START A FIRE IN THIS INSERT. KEEP ALL SUCH LIQUIDS OR AEROSOLS WELL AWAY FROM THE INSERT WHILE IT IS IN USE.**

- Do not store fuel within heater minimum installation clearances.

- Burn only seasoned natural firewood.

- This wood heater needs periodic inspection and repair for proper operation. It is against federal regulations to operate this wood heater in a manner inconsistent with operating instructions in this manual.

- This appliance should always be maintained and operated in accordance with these instructions.

- Do not elevate the fire by using a grate.

- A smoke detector, a carbon monoxide detector and a fire extinguisher should be installed in the house. The location of the fire extinguisher should be known by all family members.

- This product can expose you to chemicals including carbon monoxide, which is known to the State of California to cause cancer, birth defects or other reproductive harm. For more information go to www.P65warnings.ca.gov/

2. General Information

2.1 Performances

Values are as measured per test method, except for the recommended heating area, firebox volume, maximum burn time and maximum heat output.

Model	Inspire 2000-I Insert (OB02045)	
Combustion technology	Non-catalytic	
Fuel Type	Dry Cordwood	
Recommended heating area (sq. ft.·) [1]	500 to 2,100 ft^2 (47 to 195 m^2)	
Overall firebox volume[2]	2.4 ft^3 (0.068 m^3)	
EPA loading volume	1.95 ft^3 (0.055 m^3)	
Maximum burn time[1]	8 hours	
Maximum heat output (dry cordwood)[3]	75,000 BTU/h (22 kW)	
Overall heat output rate (min. to max.)[2 4]	14,200 BTU/h to 44,500 BTU/h (4.16 kW to 13.04 kW)	
Average overall efficiency[3] Dry cordwood	72 % (HHV)[5]	77 % (LHV)[6]
Optimum overall efficiency[7]	79 %	
Optimum heat transfer efficiency[8]	76 %	
Average particulate emissions rate[9]	2.3 g/h (EPA / CSA B415.1-10)[10]	
Average CO[11]	69 g/h	

[1] Recommended heating area and maximum burn time may vary subject to location in home, chimney draft,heat loss factors, climate, fuel type and other variables. The recommended heated area for a given appliance is defined by the manufacturer as its capacity to maintain a minimum acceptable temperature in the designated area in case of a power failure.

2 The overall firebox calculation is an approximation and is not intended to be used for loading. This volume includes a buffer zone to allow an easier fuel insertion, prevent ash spillage and allow the air wash to work properly.

[3] The maximum heat output (dry cordwood) is based on a loading density varying between 15 lb/ft^3 and 20 lb/ft^3. Other performances are based on a fuel load prescribed by the standard. The specified loading density varies between 7 lb/ft^3 and 12 lb/ft^3. The moisture content is between 19% and 25%.

[4] As measured per CSA B415.1-10 stack loss method.

[5] Higher Heating Value of the fuel.

[6] Lower Heating Value of the fuel.

[7] Optimum overall efficiency at a specific burn rate (LHV).

[8] The optimum heat transfer efficiency is for the low burn rate and represents the appliance's ability to convert the energy contained in the wood logs into energy transferred to the room in the form of heat and does not take into account the chemical losses during combustion.

[9] This appliance is officially tested and certified by an independent agency.

[10] Tested and certified in compliance with CFR 40 part 60, subpart AAA, section 60.534(a)(1(ii) and ASTM E3053-17. Based on ALT-125 sent by EPA on February 28th, 2018.

[11] Carbon monoxide.

2.2 Specifications

Recommended log length	16 in (406 mm) east-west
Maximum log length[1]	20 in (508 mm) east-west
Flue outlet diameter	6 in (150 mm)
Recommended connector pipe diameter	6 in (150 mm)
Type of chimney	ULC S635, CAN/ULC-S640, UL 1777
Minimum chimney height	12 feet
Baffle material	C-Cast
Approved for alcove installation	No
Approved for mobile home installation[2]	No
Shipping weight (without option)	420 lb (191 kg)
Appliance weight (without option)	380 lb (172 kg)
Type of door	Simple, glass with steel frame
Type of glass	Ceramic glass
Blower	Included (up to 176 CFM)
Particulate emission standard	EPA / CSA B415.1-10[3]
USA standard (Safety)	UL 1482, UL 737
Canada standard (Safety)	ULC 628

[1] North-south: ends of the logs visible, East-west: (sides of the logs visible).

[2] Mobile homes (Canada) or manufactured homes (USA): The US Department of Housing and Urban Development describes “manufactured homes” better known as “mobile homes” as follows; buildings built on fixed wheels and those transported on temporary wheels/axles and set on a permanent foundation. In Canada, a mobile home is a dwelling for which the manufacture and assembly of each component is completed or substantially completed prior to being moved to a site for installation on a foundation and connection to service facilities and which conforms to the CAN/CSA-Z240 MH standard.

[3] Tested and certified in compliance with CFR 40 part 60, subpart AAA, section 60.534(a)(1(ii) and ASTM E3053-17. Based on ALT-125 sent by EPA on February 28th, 2018.

2.3 Dimensions

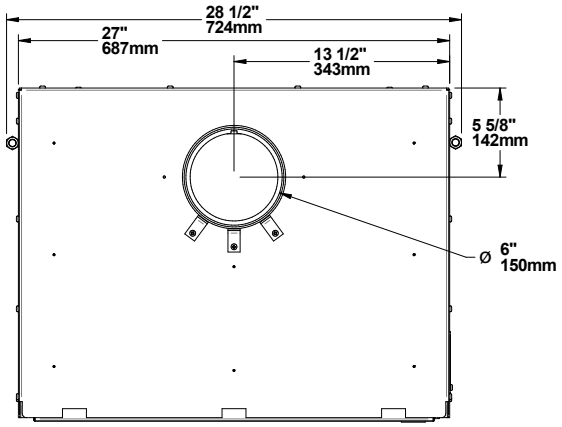

Figure 1: Top View

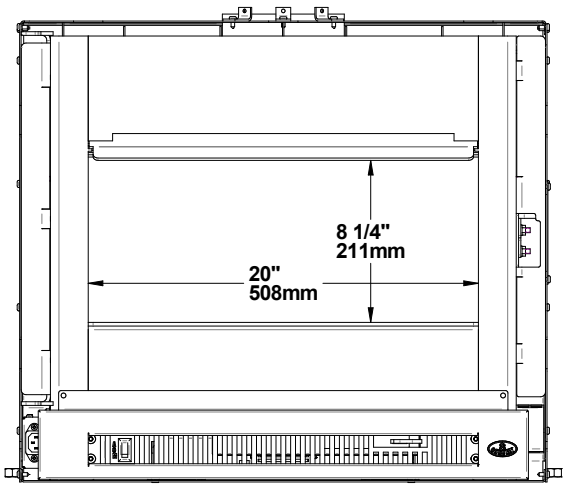

Figure 2: Door opening

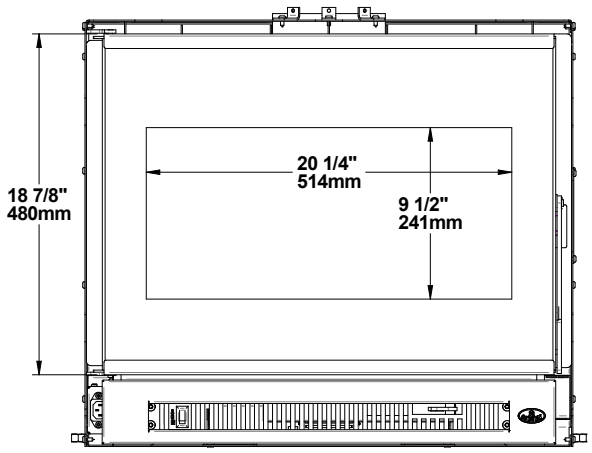

Figure 3: Front View

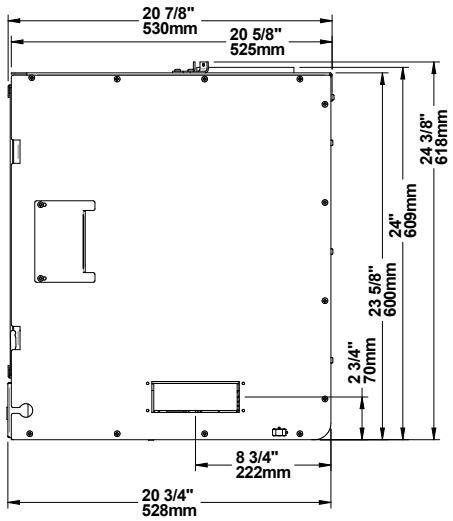

Figure 4: Side View

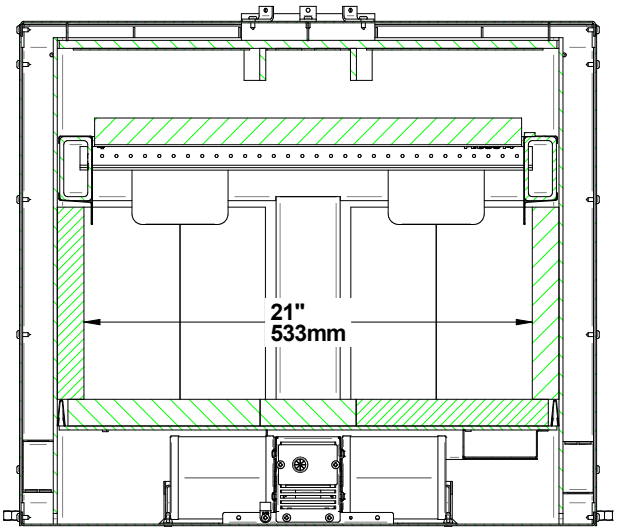

Figure 5: Front Firebox

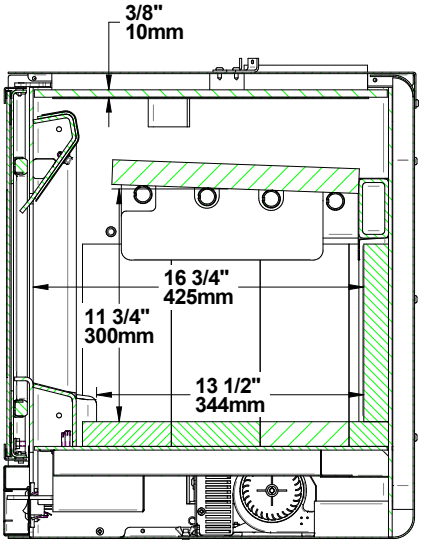

Figure 6: Side Firebox

2.4 EPA Loading Procedure

The best loading method for efficient and clean combustion with this fireplace is the EPA loading method. The images below show the space in the firebox where the logs are to be placed. It is important to always respect this space and not to put logs in the grid area marked with an X. The marked area is defined by the space between the glass and primary air channel. Leave enough space between the logs for good air circulation. Using more than the usable firebox volume for loading wood will result in poor combustion. The Usable firebox volume of 1.95 ft^3 shown below is the one used during EPA emissions certification. The log length recommended for this stove is 16 inches and the EPA testing were done with log length of 16 in. The fuel specie used for the EPA certification was beech.

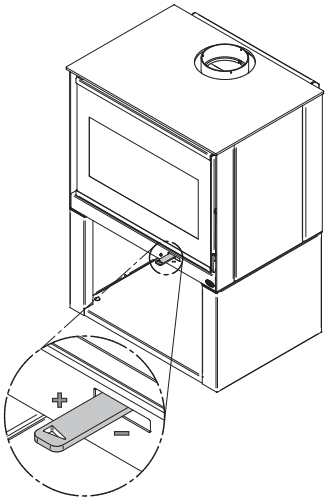

2.4.1 Air control

The air control is located underneath the ash shelf. To open the air control, push the air control handle completely to the left (High). This will increase the burn rate. To close the air control, push the air control handle completely to the right. This will permit to achieve the lowest possible burn rate.

2.4.2 High burn rate (primary air control open)

For Kindling and Start-up fuel configuration refer to the pictures below. Split the start-up fuel log into 8 pieces. Crisscross at 45 degrees the 8 pieces on the brick on 2 rows and leaving some space between each wood pieces. Crisscross at 45 degrees the kindling on the top of the start-up fuel on 3 rows, from biggest to smallest. The kindling is made of between 10-16 small pieces that are about 10% of moisture content. Place 5 newspaper sheets on top of the kindling. Light up the paper and let the door at 90 degrees between one minute and one minute and 30 seconds, then close the door. Air control is fully open.

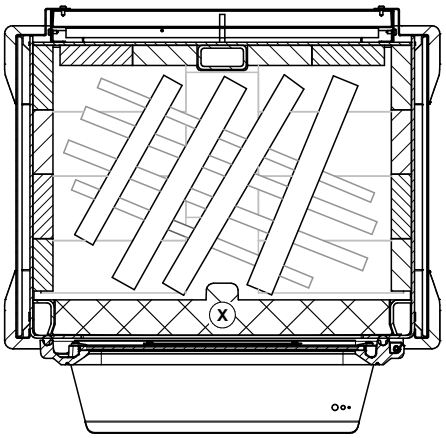

Figure 7: Start-up fuel

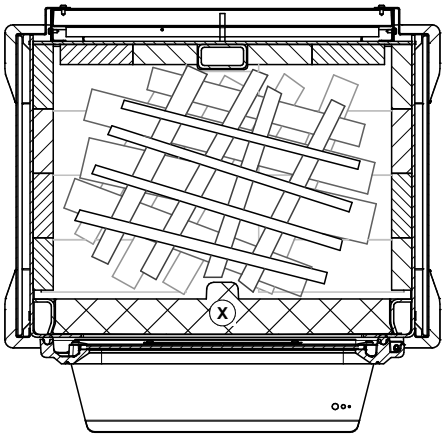

Figure 8: Kindling

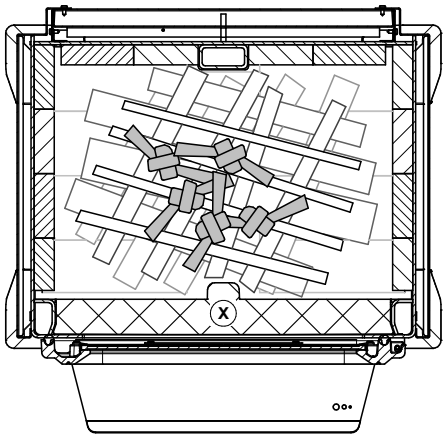

Figure 9: Newspaper

When there are only faint flames remaining and most of the wood is turned into coal, break ashes and level coal bed. Close the door.

Add High Fire load in an East-West configuration. Put 3 first pieces on the coal bed without air space between them. Leave about 1 inch of air space between the rear firebrick and the first piece. See Figure 10 and 11 for an example of high burn load inside the firebox. The front (3rd)

piece should stand off on the steel andirons by approximately 1-2 inches. The 2 other pieces should be added on top of the first 3, stacked in the middle, in an East-West orientation. Let the door open at 90 degrees between one minute and one minute and 30 seconds. Close the door, start the blower at maximum speed, and let burn until the weight is down to target.

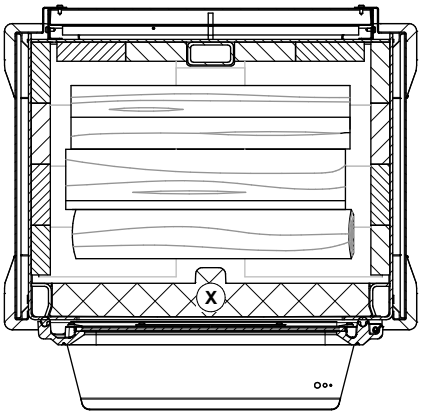

Figure 10: Position of the bottom pieces (High burn)

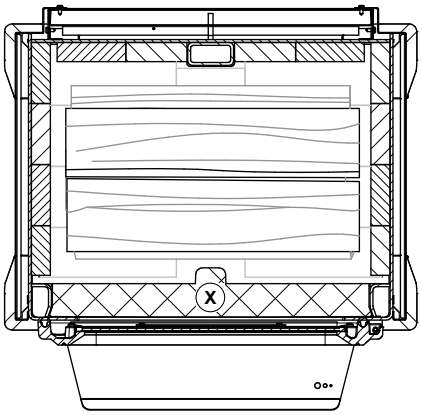

Figure 11: Position of the two top pieces (High burn)

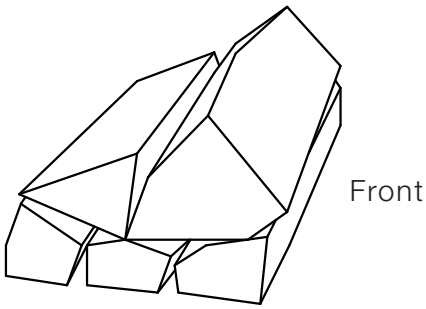

Figure 12: Example high burn load (side view)

For optimal loading of a high fire, take small to medium size fuel pieces (between 2- and 3-inches cross section dimensions approximately) on the bottom and use medium to large size fuel pieces (3.5 to 4.5 inches of cross section dimensions approximately) on top. To make sure combustion is equal, put the biggest piece on top of the first three, at the front of the firebox. See an example of high burn load in the Figure 12 above.

2.4.3 Low burn rate

After the high fire, if there is visible yellow flame, close the air control. When the charcoal bed weight is between 14 and 17% of the low fire load weight, turn off the blower, open the door, stir the coals slightly, just enough to have a level plane coal bed, and let the door remain slightly open for 1 minute before loading the low burn test fuel.

For the loading, put 3 first pieces on the coal bed in an East-West orientation. Leave approximately 1 inch to 2 inches of air space between the rear firebrick and the first piece. There should be air space between all pieces. The front (3rd) piece may contact the steel andirons. The 2 top pieces (fourth and fifth) should be added on top of the first 3, slightly angled (20° from the 3 wood pieces at the bottom). The distance between the logs should be approximately 1 inch. See Figure 13 and 14 for an example of low burn load inside the firebox.

For optimal low fire load, use medium to large size fuel pieces (between 4- and 5.5-inches cross section dimensions approximately) on the bottom and use small to medium size fuel pieces (2.5 to 4 inches cross section dimensions approximately) on top. To make sure combustion is equal, put the smallest piece on top of the first three, at the back of the firebox (see Figure 15 for an example of low burn load).

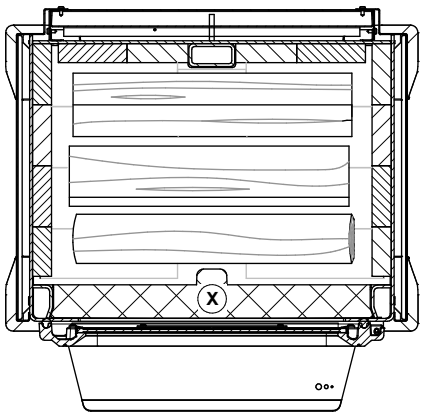

Figure 13: Position of the bottom pieces (Low burn)

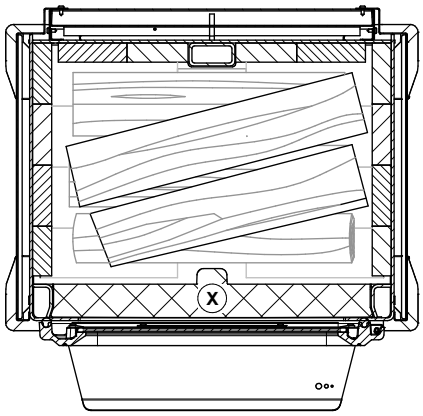

Figure 14: Position of the two top pieces (Low burn)

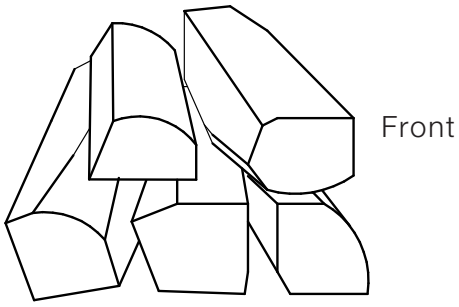

Figure 15: Example low burn load (side view)

Let the door ajar at 90° until the flames roll on top of the fuel (between 2:00 and 4:00 minutes) and then close the door with the primary air control open. See picture below for rolling flame:

Close the primary air control by small increments (ex: 1/16 of an inch), from ½" to fully closed, between 4 and 15 minutes after the loading period. Before closing further, make sure the flame intensity is increasing or stable. Close the air control completely. Turn ON the blower at maximum speed.

2.4.4 Medium burn rate

After the high fire, if there is visible yellow flame, close the air control. When the charcoal bed After the high fire, if there is visible yellow flame, close the air control. When the charcoal bed weight is between 14 and 17% of the medium fire load weight, turn off the blower, open the door, stir the coals slightly, just enough to have a level plane coal bed, and let the door remain slightly open for 1 minute before loading the medium burn test fuel.

For the loading, put 3 first pieces on the coal bed in an East-West orientation. Leave about 1 to 2 inches of air space between the rear firebrick and the first piece. The front (3rd) piece may contact the steel andirons. The 2 top pieces (fourth and fifth) should be added on top of the first 3, slightly angled (20° from horizontal, top view). The distance between the logs should be approximately 1 inch. See Figure 16 and 17 for an example of medium burn load inside the firebox.

For optimal medium fire load, use medium to large size fuel pieces (between 4- and 5.5-inches cross section dimensions approximately) on the bottom and use small to medium size fuel pieces

(2.5 to 4 inches cross section dimensions approximately) on top. To make sure combustion is equal, put the smallest piece on top of the first three, at the back of the firebox (see Figure 18 for an example of medium burn load).

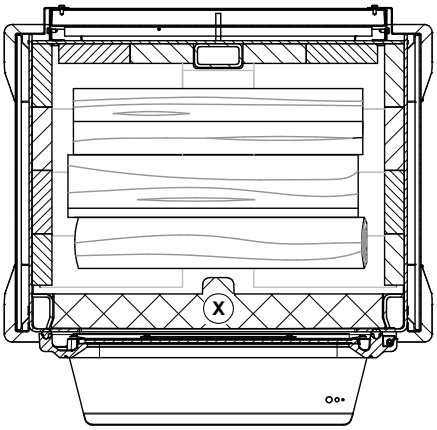

Figure 16: Position of the bottom pieces (Medium burn)

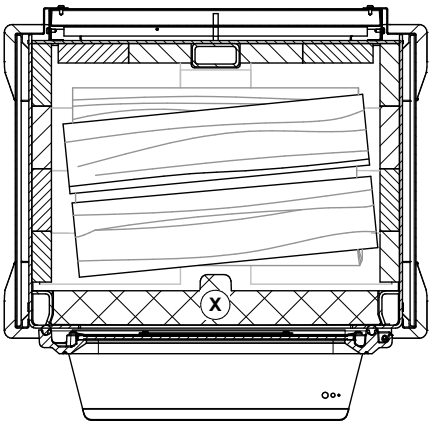

Figure 17: Position of the two top pieces (Medium burn)

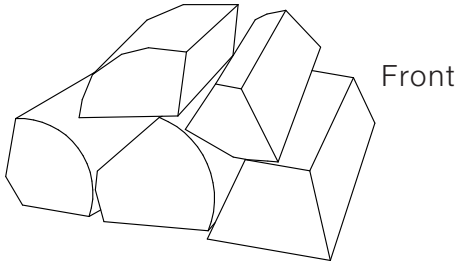

Figure 18: Example medium burn load (side view)

Let the door ajar at 90° until the flames roll on top of the fuel (between 2:30 and 5:00) and then close the door with the primary air control open. See picture below for rolling flame:

Close the primary air control by small increments (ex: 1/16 of an inch) until reaching the mid-point of air control position, between 4 and 15 minutes after the loading period. Before closing further, make sure the flame intensity is increasing or stable. Turn ON the blower at maximum speed.

2.5 Materials

The SBI team is committed to protecting the environment, so they do everything they can to use only materials in their products that will have no lasting negative impact on the environment.

The **body** of this insert, which is most of its weight, is carbon steel. Should it ever become necessary many years in the future, almost the entire insert can be recycled into new products, thus eliminating the need to mine new materials.

The **paint** coating on the insert is very thin. Its VOC content (Volatile Organic Compounds) is very low. VOCs can be responsible for smog, so all the paint used during the manufacturing process meets the latest air quality requirements regarding VOC reduction or elimination.

The **air tubes** are stainless steel, which can also be recycled.

The **baffle** is made of aluminosilicate fibre material that is compressed with a binder to form a rigid board. C-Cast can withstand temperatures above 2,000 °F. It is not considered hazardous waste. Disposal at a landfill is recommended.

The firebricks are mainly composed of silicon dioxide, also known as silica, a product processed from a mined mineral. It is most commonly found in nature in the form of sand and clay. Disposal at a landfill is recommended.

The door and glass **gaskets** are fibreglass which is spun from melted sand. Black gaskets have been dipped into a solvent-free solution. Disposal at a landfill is recommended.

The door **glass** is a 4 mm thick ceramic material that contains no toxic chemicals. It is made of natural raw materials such as sand and quartz that are combined in such a way to form a high temperature glass. Ceramic glass cannot be recycled in the same way as normal glass, so it should not be disposed of with the regular household products. Disposal at a landfill is recommended.

2.6 Zone Heating

This insert is a space heater, which means it is intended to heat the area it is installed in, as well as spaces that connect to that area, although to a lower temperature. This is called zone heating and it is an increasingly popular way to heat homes or spaces within homes.

Zone heating can be used to supplement another heating system by heating a particular space within a home, such as a basement, a family room or an addition that lacks another heat source.

Houses of moderate size and relatively new construction can be heated with a properly sized and located wood insert. Whole house zone heating works best when the insert is in the part of the house where the family spends most of its time. This is normally the main living area where the kitchen, dining and living rooms are located.

Locating the insert in this area will give the maximum benefit of the heat it produces and will achieve the highest possible heating efficiency and comfort. The space where the most time is spent will be warmest, while bedrooms and basement (if there is one) will stay cooler. In this way, less wood is burned than with other forms of heating.

Although the insert may be able to heat the main living areas of the house to an adequate temperature, it is strongly recommended to also have a conventional oil, gas or electric heating system to provide backup heating.

The success of zone heating will depend on several factors, including the correct sizing and location of the insert, the size, layout and age of the home and the climate zone. Three-season vacation homes can usually be heated with smaller inserts than houses that are heated all winter.

2.7 Emissions and Efficiency

The low smoke emissions produced by the special features inside this insert firebox means that the household will release up to 90% less smoke into the outside environment than if an older conventional insert was used. But there is more to the emission control technologies than protecting the environment.

The smoke released from wood when it is heated contains about half of the energy content of the fuel. By burning the wood completely, this insert releases all the heat energy from the wood instead of wasting it as smoke up the chimney. Also, the features inside the firebox allow control of the air supply meaning controlling the heat output, while maintaining clean and efficient flaming combustion, which boosts the efficient delivery of heat to the home.

The emission control and advanced combustion features of this insert can only work properly if the fuel used is in the correct moisture content range of 15% to 20%. See section «3. Fuel» of this manual for suggestions on preparing fuelwood and judging its moisture.

3. Fuel

Good firewood has been cut to the correct length for the insert, split to a range of sizes and stacked in the open until its moisture content is down to 15% to 20%.

MATERIALS THAT SHOULD NOT BE BURNED

- **COAL;**
- **GARBAGE;**
- **LAWN CLIPPINGS OR YARD WASTE;**
- **MATERIALS CONTAINING RUBBER, INCLUDING TIRES;**
- **MATERIALS CONTAINING PLASTIC;**
- **WASTE PETROLEUM PRODUCTS, PAINTS OR PAINT THINNERS, OR ASPHALT PRODUCTS;**
- **MATERIALS CONTAINING ASBESTOS;**
- **CONSTRUCTION OR DEMOLITION DEBRIS;**
- **RAILROAD TIES OR PRESSURE-TREATED WOOD;**
- **MANURE OR ANIMAL REMAINS;**
- **SALT WATER DRIFTWOOD OR OTHER PREVIOUSLY SALT WATER SATURATED MATERIALS;**
- **UNSEASONED WOOD; OR**
- **PAPER PRODUCTS, CARDBOARD, PLYWOOD, OR PARTICLEBOARD. THE PROHIBITION AGAINST BURNING THESE MATERIALS DOES NOT PROHIBIT THE USE OF FIRE STARTERS MADE FROM PAPER, CARDBOARD, SAW DUST, WAX AND SIMILAR SUBSTANCES FOR THE PURPOSE OF STARTING A FIRE IN AN AFFECTED WOOD HEATER.**

BURNING THESE MATERIALS MAY RESULT IN RELEASE OF TOXIC FUMES OR RENDER THE HEATER INEFFECTIVE AND CAUSE SMOKE.

3.1 Tree Species

The tree species the firewood is produced from is less important than its moisture content. The main difference in firewood from various tree species is the density of the wood. Hardwoods are denser than softwoods.

Homeowners with access to both hardwood and softwood use both types for different purposes. Softer woods make good fuel for mild weather in spring and fall because they light quickly and produce less heat. Softwoods are not as dense as hardwoods so a given volume of wood contains less energy. Using softwoods avoids overheating the house, which can be a common problem with wood heating in moderate weather. Harder woods are best for colder winter weather when more heat and longer burn cycles are desirable.

Note that hardwood trees like oak, maple, ash and beech are slower growing and longer lived than softer woods like poplar and birch. That makes hardwood trees more valuable. The advice that only hardwoods are good to burn is outdated. Old, leaky cast iron inserts wouldn't hold a fire overnight unless they were fed large pieces of hardwood. That is no longer true.

3.2 Log Length

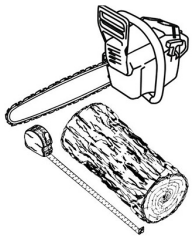

Logs should be cut at least 1" (25 mm) shorter than the firebox so they fit in easily. Pieces that are even slightly too long makes loading the insert very difficult. The most common standard length of firewood is 16" (400 mm).

3.3 Piece Size

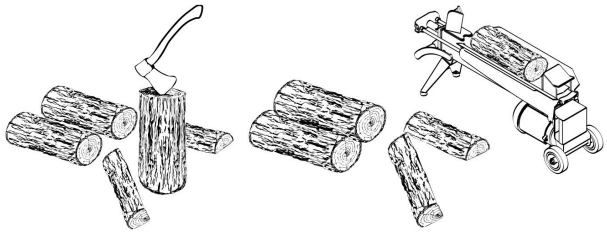

Firewood dries more quickly when it is split. Large unsplit rounds can take years to dry enough to burn. Even when dried, unsplit logs are difficult to ignite because they don't have the sharp edges where the flames first catch.

Wood should be split to a range of sizes, from about 3" to 6" (75 mm to 150 mm) in cross section. Having a range of sizes makes starting and rekindling fires much easier.

3.4 Compressed Wood Logs

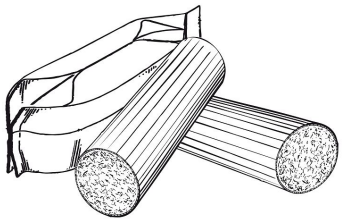

Compressed wood logs made of 100% compressed sawdust can be burned with caution in the number of these logs burned at once. Do not burn compressed logs made of wax impregnated sawdust or logs with any chemical additives. Follow the manufacturer's instructions and warnings.

3.5 Drying Time

Firewood that is not dry enough to burn is the cause of most complaints about wood burning appliances. Continually burning green or unseasoned wood produces more creosote and involves lack of heat and dirty glass door. Firewood with a moisture content between 15% and 20% will allow the insert to produce its highest possible efficiency.

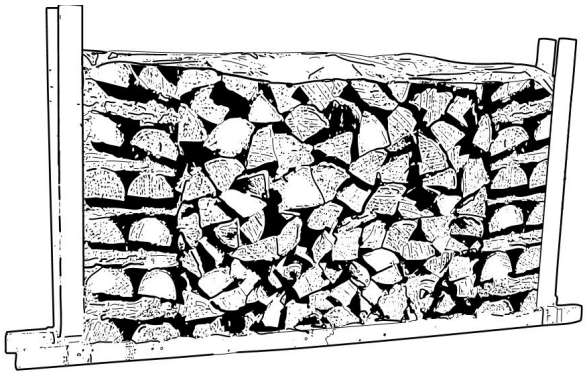

Here are some things to consider in estimating drying time:

- Firewood bought from a dealer is rarely dry enough to burn, so it is advisable to buy the wood in spring and dry it yourself;
- Drying happens faster in dry weather than in a damp climate;
- Drying happens faster in warm summer weather than in winter weather;
- Small pieces dry more quickly than large pieces;
- Split pieces dry more quickly than unsplit rounds;
- Softwoods like pine, spruce, poplar, and aspen take less time to dry than hardwoods. they can be dry enough to burn after being stacked to air dry only for the summer months;

– Hardwoods like oak, maple and ash can take one, or even two years to dry fully, especially if the pieces are big;
– Firewood dries more quickly when stacked outside in a location exposed to sun and wind; it takes much longer to dry when stacked in a wood shed;

The firewood is dry enough to burn when:

– Cracks form at the ends of logs as they dry;
– The wood turns from white or cream colored to grey or yellow;
– Two pieces of wood struck together sounds hollow;
– Dry wood is much lighter in weight than wet wood,
– The face of a fresh cut feels warm and dry;
– The moisture content read by a moisture meter is between 15% to 20%.

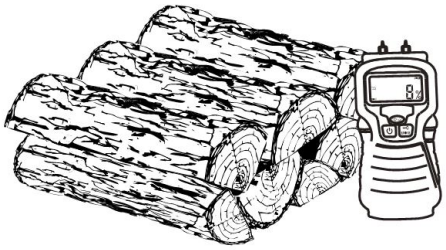

4. Operating the Insert

This wood heater has a manufacturer-set minimum low burn rate that must not be altered. It is against federal regulations to alter this setting or otherwise operate this wood heater in a manner inconsistent with operating instructions in this manual.

Before using the insert, the following steps should be followed:

- Install the faceplate (See «Appendix 1. Faceplate Installation»)
- Plug in the blower power cord. The sleeve **(A)** and the power cord **(B)** can be found in the owner's manual kit. Refer to the following figure.

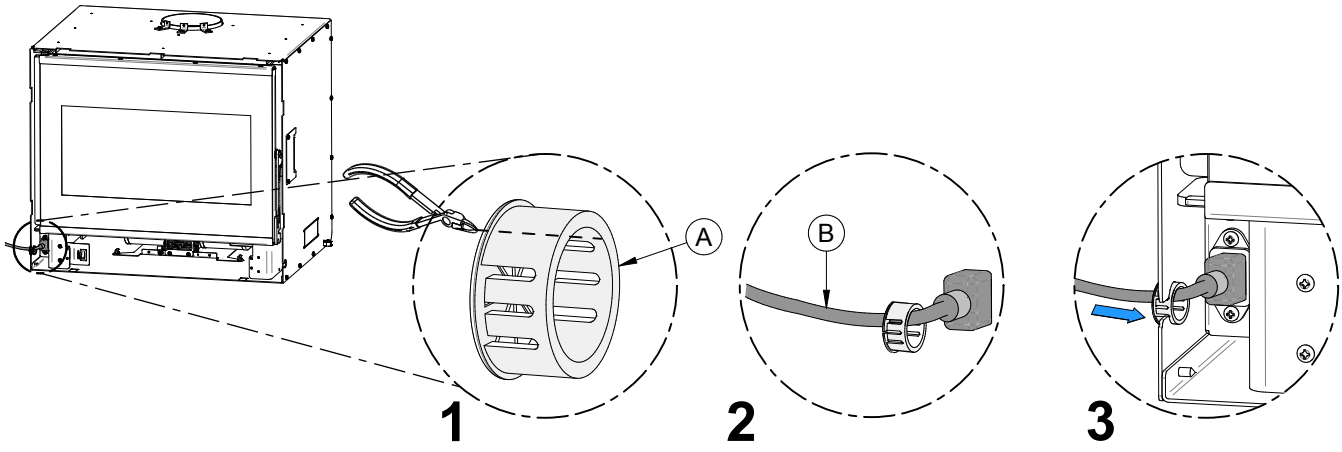

Figure 19: Plugging in the blower power cord

The following steps are optional :

- Install the fresh air intake (See «Appendix 2. Optional Fresh Air Intake Kit Installation»)
- Install the refractory slabs (See «Appendix 1. Faceplate Installation»)

4.1 Cold Hand

The cold hand is a handle, supplied with the insert. It allows to open the door and avoid burns. To open, insert the cold hand into the opening on the right side of the insert. Pull on the cold hand to open the door. Push to close the door. The cold hand should not remain on the insert when it is in use and should be kept outside the heat radiation zone of the appliance.

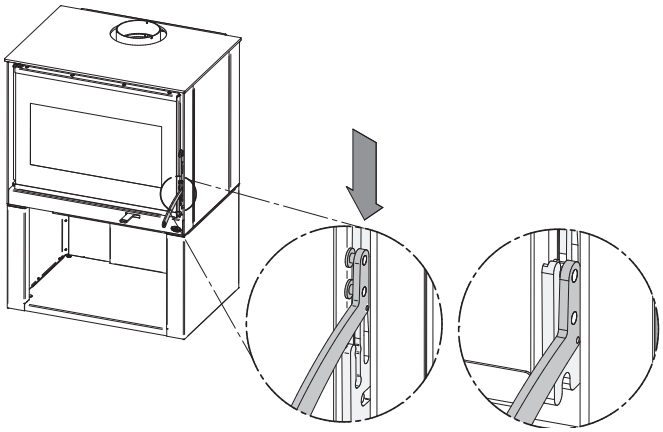

Figure 20: Opening on the right side of the insert

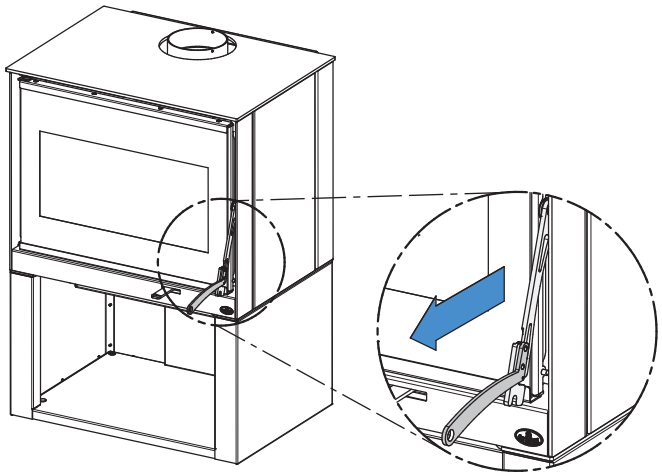

Figure 21: Pull on the cold hand to open the door.

4.2 Blower Operation

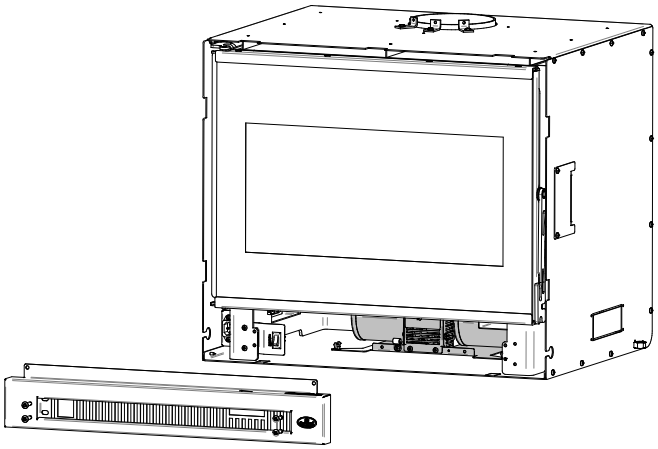

Figure 22: Blower location

A blower is already installed on this insert. It is located behind the bottom louver of the insert. Its function is to increase airflow through the heat exchanger and improve hot air circulation in the room. When used regularly, the blower can provide a small increase in efficiency, up to 2%. However, it should not be used as a way to gain more output from an insert that is undersized for the space it is intended to heat.

Ensure the blower cord is not in contact with any surface of the insert to prevent electrical shock or fire damage. Do not run cord underneath the insert.

Allow the insert to reach operating temperature (approximately one hour) before turning on the blower, since increased airflow from the blower will remove heat and affect the start up combustion efficiency.

The blower is equipped with a heat sensor. Therefore, the switch can be left in the automatic position **(A)**. The blower will start automatically when the insert is hot enough and it will stop when the insert has cooled down. The switch can also be set to the manual position **(M)** to turn on the blower manually and have it run continuously. The position **(O)** stops the blower and prevents it from starting automatically when the insert is hot enough.

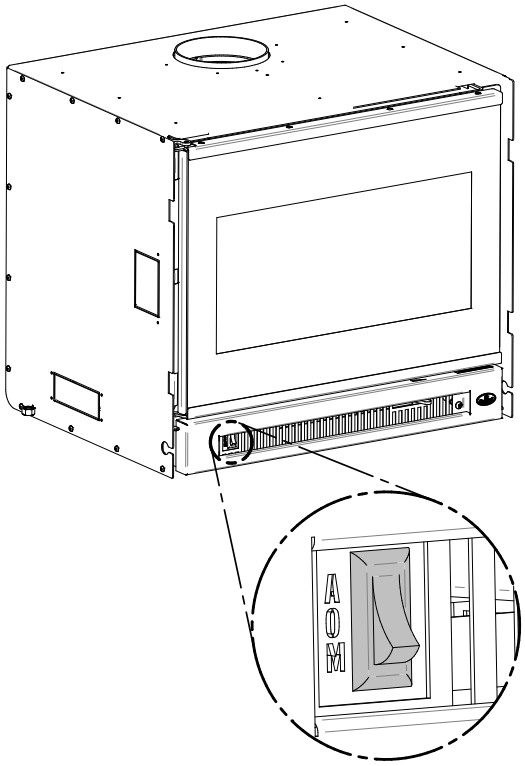

Figure 23: Blower modes

5. Burning Wood Efficiently

5.1 First Use

Two things happen when burning the first few fires; the paint cures and the internal components of the insert are conditioned. As the paint cures, some of the chemicals vaporize. The vapors are not poisonous, but they smell bad. When lighting the insert for the first few times, be prepared by opening doors or windows to ventilate the house.

Burn one or two small fires to begin the curing and conditioning process. Then build bigger and hotter fires until there is no longer paint smell from the insert. As hotter and hotter fires are burned, more of the painted surfaces reach the curing temperature of the paint. The smell of curing paint does not disappear until one or two very hot fires have been burned.

5.2 Lighting Fires

Each person heating with wood develops its own favorite way to light fires. Regardless of the method chosen, the goal should be to have a hot fire burning, quickly. A fire that ignites fast produces less smoke and deposits less creosote in the chimney.

Never use gasoline, gasoline-type lantern fuel (naphtha), fuel oil, motor oil, kerosene, charcoal lighter fluid, or similar liquids or aerosols to start or 'freshen up' a fire in this wood insert.

Here is one popular and effective way to ignite wood fires.

5.2.1 Conventional Method

The traditional method for starting a wood fire is the top-down fire. To light it properly, you'll need about ten small pieces of wood (approximately 1 inch in diameter) and 5 medium-sized pieces (2-3 inches in diameter). Start by placing two small pieces on each side of the combustion chamber. Crumple 5 to 10 sheets of newspaper and place them between the two small pieces of wood. Cross the remaining small pieces over the newspaper. For better ignition, leave space for the newspaper and avoid crushing it with the wood pieces. Also, leave space between each piece of wood. Next, place the 5 larger pieces on top of the smaller pieces of wood in two layers, crossing them (Refer to the attached images for examples of wood stacking). Open the air intake control completely and light the newspaper. The free flow of flames around each piece of wood and the absence of smoke indicate a quality ignition. Leave the door slightly ajar for about 5 minutes. When the fire is well lit, close the door while keeping the air intake control open. When the small kindling wood is almost completely burned and the medium-sized pieces are still burning, it's time to add larger pieces of wood until the fire is well established.

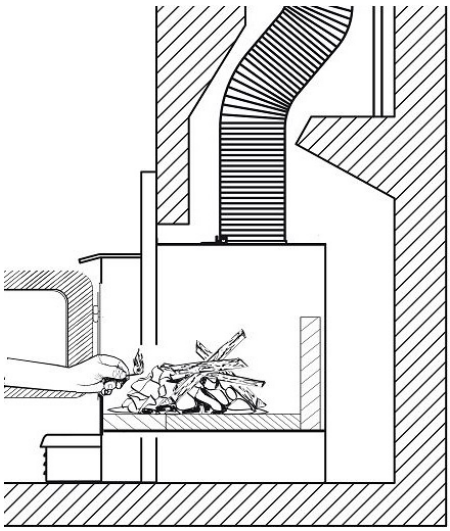

Do not leave the insert unattended when the door is slightly open. Always close and latch the door after the fire ignites.

5.2.2 Using Fire Starters

Commercial fire starters can be used instead of a newspaper. Some of these starters are made of sawdust and wax and others are made of specialized flammable solid chemicals. Always follow the package directions when using.

Gel starters can also be used, but only to light a fire, in a cold combustion chamber without hot embers inside.

5.3 Combustion Cycles

Wood heating with a space heater is very different than other forms of heating. There will be temperature variations in different parts of the house and there will be temperature variations throughout day and night. This is normal, and for experienced wood burners these are advantages of zone heating woodburning.

Wood inserts don't have a steady heat output. It is normal for the temperature to rise after a new load of wood is ignited and for its temperature to gradually decrease throughout the burning cycle. This increasing and decreasing temperature can be matched with the household routines. For example, the temperature in the area can be cooler when the household is active, and it can be warmer when it is inactive.

Wood burns best in cycles. A cycle starts when a new load of wood is ignited by hot coals and ends when that load has been consumed down to a bed of charcoal about the same size as it was when the wood was loaded.

Trying to produce a steady heat output by placing a single log on the fire at regular intervals is not recommended. Always place at least three, and preferably more pieces on the fire at a time so that the heat radiated from one piece helps to ignite the pieces next to it. Each load of wood should provide several hours of heating. The size of each load may vary depending on the amount of heat required.

Burning in cycles means the insert door does not need to be opened while the wood is flaming. This is an advantage since it is preventing smoke leaking from the insert when the door is opened as a full fire is burning. This is especially true if the chimney is on the outside wall of the house.

If the door must be opened while the fire is flaming, fully open air control for a few minutes then open the door slowly.

5.4 Rekindling a Fire

When all that remains is embers, remove excess ash from the front of the firebox and bring the ashes forward. Place a new load of wood on, and at the back of the embers. Open the air control completely and close the door.

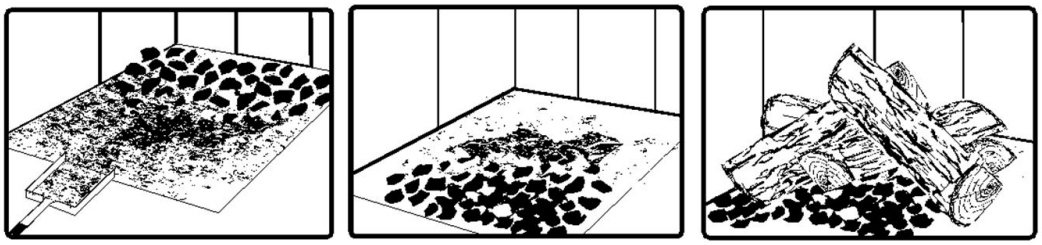

Raking the coals is useful for two reasons. First, it brings them near where most of the combustion air enters the firebox. This will ignite the new load quickly. Secondly, the charcoal will not be smothered by the new load of wood. When the embers are simply spread inside the combustion chamber, the new load smoulder for a long time before igniting.

Close the air control only when the firebox is full of bright turbulent flames, the wood is charred, and its edges are glowing.

The insert should not be left unattended during ignition and the fire should not burn at full intensity for more than a few minutes.

When lighting a new load, the appliance produces a heat surge. This heat surge is pleasant when the room temperature is cool but can be unpleasant when the room is already warm. Therefore, it is best to let each load of wood burn completely so that the room cools down before putting a load of wood back on.

5.5 Removing Ashes

Ash should be removed from the firebox every two to three days of full time heating. Ash should not accumulate excessively in the firebox since it will affect the proper operation of the insert.

The best time to remove ash is in the morning, after an overnight fire when the insert is relatively cold, but there is still a little chimney draft to draw the ash dust into the insert and prevent going out into the room.

Ashes almost always contain live embers that can stay hot for days and which release carbon monoxide gas. Ashes should be placed in a tightly covered metal container. The container must be placed on a non-combustible floor or on the ground well away from all combustible materials.

If the ashes are disposed of by burial in soil or otherwise locally dispersed, they should be kept in a closed metal container until they are completely cooled. No other waste should be placed in this container.

NEVER STORE ASHES INDOORS OR IN A NON-METALLIC CONTAINER OR ON A WOODEN DECK.

5.6 Air Intake Control

Once the firewood, firebox and chimney are hot, air intake can be reduced to achieve a steady burn.

As the air intake is reduced, the burn rate decreases. This has the effect of distributing the thermal energy of the fuel over a longer period of time. In addition, the flow rate of exhaust through the insert and flue pipe slows down, which increases the duration of the energy transfer of the exhaust gases. As the air intake is reduced, the flame slows down.

If the flames diminish to the point of disappearing, the air intake has been reduced too early in the combustion cycle or the wood used is too wet. If the wood is dry and the air control is used properly, the flames should decrease, but remain bright and stable.

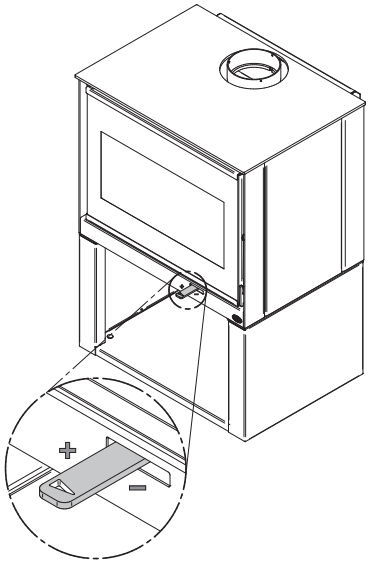

Figure 24: Air Intake Control

5.7 Fire Types

Using the air intake control is not the only way to match the insert heat output to the desired temperature in the house. A house will need far less heating in October than in January to maintain a comfortable temperature. Filling the firebox full in fall weather will overheat the space. Otherwise, the combustion rate will have to be reduced to a minimum and the fire will be smoky and inefficient. Here are some suggestions for building fires suitable for different heating needs.

5.7.1 Flash Fire

To build a small fire that will produce a low heat output, use small pieces of firewood and load them crisscross in the firebox. The pieces should only be 3" to 4" in diameter. After raking the coals, lay two pieces parallel to each other diagonally in the firebox and lay two more across

them in the other direction. Open the air control fully and only reduce the air after the wood is fully flaming.

This kind of fire is good for mild weather and should provide enough heat for up to four hours. Small fires like this are a good time to use softer wood species and avoid overheating the house.

5.7.2 Long Lasting Fire

For a fire that will last up to eight hours but will not produce intense heat, use soft wood and place the logs compactly in the firebox. Before reducing the air intake, the load will have to burn at full heat for long enough for charring the surface of the logs. The flame must be bright before letting the fire burn by itself.

5.7.3 High Output Fires

When heating needs are high during cold weather, the fire should burn steadily and brightly. This is the time to use larger pieces of hardwood. Place the biggest pieces at the back of the firebox and place the rest of the pieces compactly. A densely built fire like this will produce the longest combustion this insert is capable of.

Special attention must be paid when building fires like this since if the air intake is reduced too quickly, the fire could smoulder. The wood must be flaming brightly before leaving the fire to burn.

5.7.4 Maximum Burn Cycle Times

The burn cycle time is the period between loading wood on a coal bed and the consumption of that wood back to a coal bed of the same size. The flaming phase of the fire lasts for roughly the first half of the burn cycle and the second half is the coal bed phase during which there is little or no flame. The burning time expected from this insert, including both phases, will vary depending on a number of things, such as:

- firebox size,
- the amount of wood loaded,
- the species of wood,
- the wood moisture content,
- the size of the space to be heated,
- the climate zone where the house is, and
- the time of the year.

The table below gives an approximate maximum burn cycle times, based on firebox volume.

Table 1 : Approximate Maximum Burn Cycle Time

FIREBOX VOLUME	MAXIMUM BURN CYCLE TIME
<1.5 cubic feet	3 to 5 hours
1.5 c.f. to 2.0 c.f	5 to 6 hours
2.0 c.f. to 2.5 c.f.	6 to 8 hours
2.5 c.f. to 3.0 c.f.	8 to 9 hours
>3.0 c.f.	9 to 10 hours

A longer burning time is not necessarily an indication of efficient insert operation. It is preferable to build a smaller fire that will provide three or four hours of heating than to fully load the firebox for a much longer burn. Shorter burn cycles make it easier to match the heat output of the insert to the heat demand for the space.

5.7.5 Logs Orientation

In a relatively square firebox, the wood can be loaded north-south (ends of the logs visible) or east-west (sides of the logs visible).

North-south loads allow more wood to be loaded at the same time. On the other hand, they break into smaller pieces faster. North-south loading is good for high output, long lasting fires for cold weather.

East-west loads allow a limited amount of wood since too many logs could cause them to fall on the glass. East-west loads, placed in a compact way, take a long time before breaking down. They are excellent for low-intensity, long-lasting fires in relatively mild weather.

5.7.6 Carbon Monoxide

When unburned logs remain in the firebox and the flame disappears, go outside and look at the chimney exit. If there is visible smoke, it means that there is still combustible to burn but that the fire lacks air to burn properly. In this situation, the CO rate will increase so it is important to react. Open the door slightly and move the log with a poker. Turn it over and create a passage for the air below, making a trench with the coal bed. Add small pieces of wood to restart the combustion.

6. Maintenance

This insert will give many years of reliable service if used and maintained properly. Internal components of the firebox such as firebricks or refractory panels, baffle and air tubes will wear over time. Defective parts should always be replaced with original parts. See «Appendix 8. Exploded Diagram and Parts List».

To avoid premature deterioration of the insert follow the lighting and reloading procedures in «5. Burning Wood Efficiently» and also avoid letting the insert run with the air intake fully open for entire burn cycles.

6.1 Insert

6.1.1 Cleaning and Painting the Insert

Painted and plated surfaces can be wiped down with a soft, damp cloth. If the paint is scratched or damaged, it is possible to repaint the insert with a heat-resistant paint. **Do not clean or paint the insert when it is hot.** Before painting, the surface should be sanded lightly with sandpaper and then wiped off to remove dust. Apply two thin layers of paint.

6.1.2 Refractory Materials and Baffle

Inspect the firebricks or the refractory panels and the baffle for damage periodically and replace anything that is broken.

Operation of the insert with a cracked or missing baffle may cause unsafe temperatures and hazardous conditions and will void the warranty.

6.2 Glass Door

6.2.1 Cleaning

Under normal conditions, the door glass should stay relatively clear. If the firewood is dry enough and the operating instructions in this manual are followed, a whitish, dusty deposit will form on the inner surface of the glass after a week or so of use. This is normal and can be easily removed when the insert is cold by wiping with a damp cloth or paper towel and then drying.

When the insert runs at a low combustion rate, light brown stains may form, especially in the lower corners of the glass. This indicates that the fire has been smoky and some of the smoke has condensed on the glass. It also indicates incomplete combustion of the wood, which also means more smoke emissions and faster formation of creosote in the chimney.

The deposits that form on the glass are the best indication of the fuel quality and success in properly using the insert. These stains can be cleaned with a special wood insert glass cleaner. **Do not use abrasive products to clean the insert glass.**

The goal should be having a clear glass with no brown stains. If brown stains appear regularly on the glass, something about the fuel or the operating procedure needs to be changed.

When brown streaks are coming from the edge of the glass, it is time to replace the gasket around the glass. The glass gasket should be self-adhesive. Follow the instructions in section «6.2.3 Gasket» for installation. Always replace the gasket with a genuine one. See «Appendix 8. Exploded Diagram and Parts List».

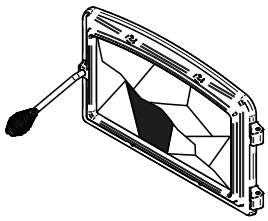

Do not clean the glass when the insert is hot.

Do not abuse the glass door by striking or slamming shut.

Do not use the insert if the glass is broken.

6.2.2 Replacement

The glass used is a ceramic glass, 4 mm thick with a dimension of 24 13/16" X 18 ½" (63 cm X 47 cm) tested to reach temperatures up to 1400° F. If the glass breaks, it must be replaced with one having the same specification.

Tempered glass or ordinary glass will not withstand the high temperatures of this unit.

To replace the glass **(D)**, use the following procedure

1. Remove the door from its hinges and lay it on a soft, flat surface.
2. Remove the upper glass retainer **(A)** and the lower glass retainer **(B)** held in place by the screws **(C)**.
3. Remove the glass **(D)**. If it is damaged install a new one in place. The replacement glass must have a gasket. See the installation procedure.
4. Reinstall the glass, being careful to centre the glass in the door and not to over-tight retaining screws.
5. Repeat the steps in reverse order to reinstall the door on the insert.

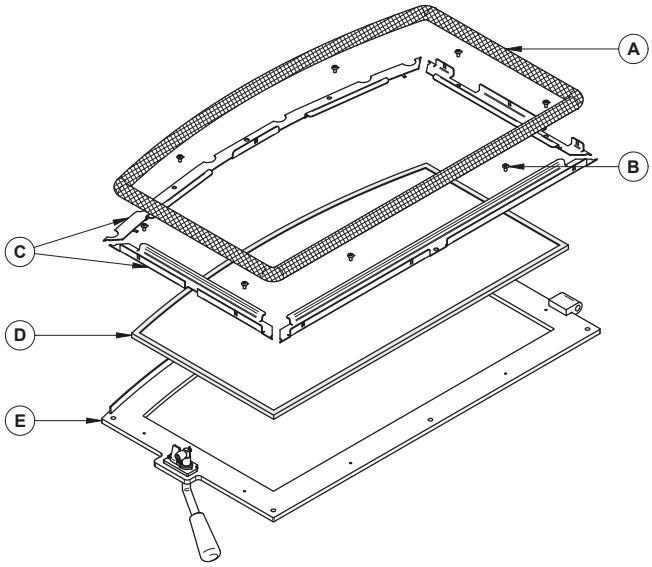

Figure 25: Replacing the glass

6.2.3 Gasket

It is a good idea to replace the glass gasket when the door gasket is being replaced. The new gasket is flat, adhesive-backed and made of woven fibreglass.

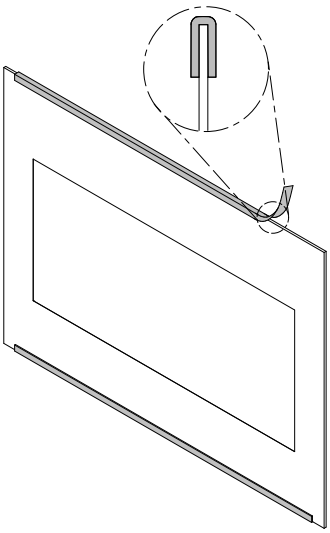

Figure 26: Glass gasket

1. Remove the glass following the first three steps of the «Replacement» section.
2. Remove the old gasket and clean the glass thoroughly.
3. Peel back a section of the paper covering the adhesive and place the gasket on a table with the adhesive side up.
4. Stick the end of the gasket to the middle of one edge, then press the edge of the glass down onto the gasket, taking care that it is perfectly centered on the gasket.
5. Cut the gasket to the required length.
6. Pinch the gasket onto the glass in a U shape.
7. Repeat for the other side of the glass.

Another glass gasket **(A)** is located between the door and the glass. The gasket is stuck on the exterior surface of the door **(B)**. Install according to the following illustrations.

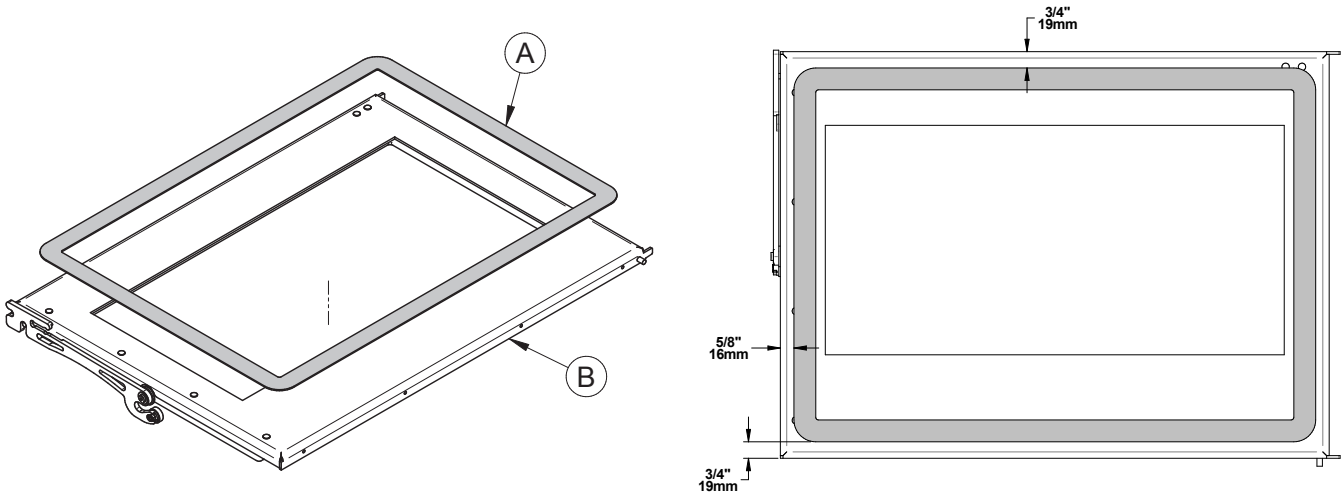

Figure 27: Replacing the glass gasket on the door

Location	Length	Dimension
Behind the door	92 ½" (235 cm)	Flat 1" (25 mm)

6.3 Door

In order for the insert to burn at its best efficiency, the door must provide a perfect seal with the firebox. The tightness of the door seal can be verified by closing and latching the door on a strip of paper. The test must be performed all around the door. If the paper slips out easily anywhere, either adjust the door or replace the gasket.

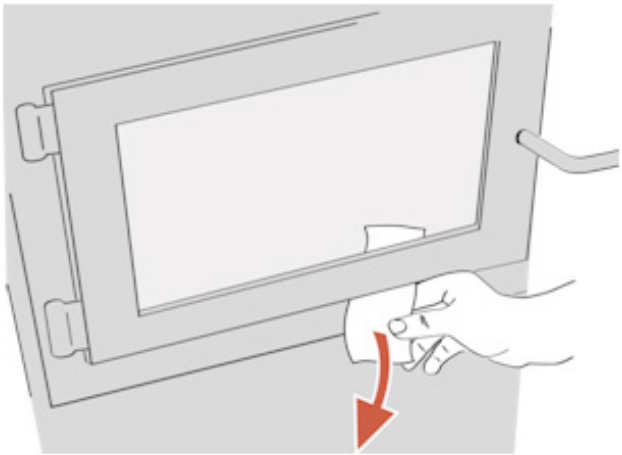

Figure 28: Door gasket seal verification

6.3.1 Adjustment

The gasket seal may be improved with a simple latch mechanism adjustment to increase or reduce the pressure on the gasket:

1. Open the door and unscrew the four nuts **(A)** holding the bracket **(B)** in place.
2. To increase the pressure on the gasket, remove as much washers **(C)** as necessary. To decrease the pressure on the door, add washers **(C)**.
3. Reinstall the bracket **(B)** with the nuts **(A)**.

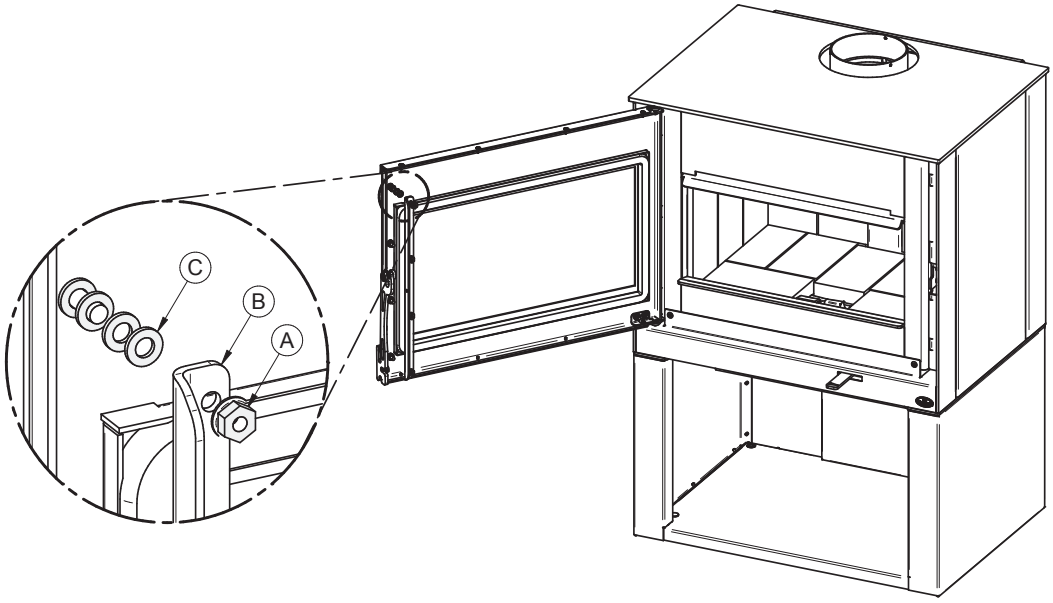

Figure 29: Door adjustment with bracket

It is also possible to fix the handle angle by adjusting the door latch mechanism, located on the right hand side opening of the insert.

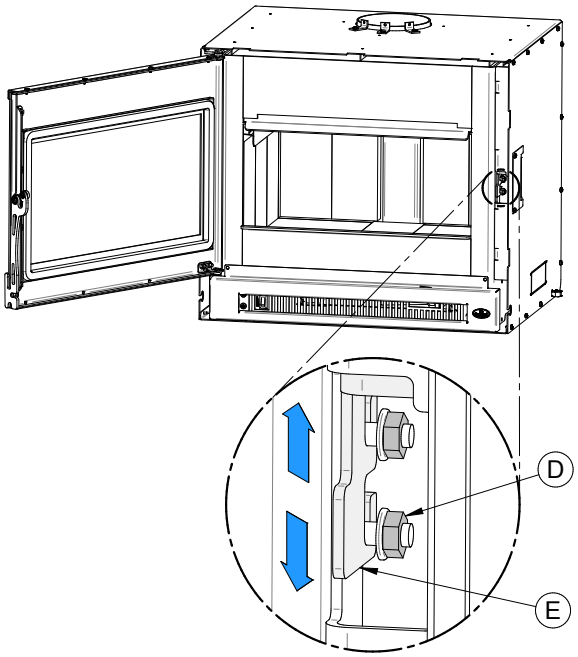

Figure 30: Door handle angle adjustment

4. Unscrew the nuts **(D)** and lift the door latch mechanism **(E)** to increase the pressure on the door. Lower the mechanism **(E)** to release pressure.

The door angle can also be adjusted by unscrewing the nuts **(F)** and sliding the bracket **(G)** towards the left or the right.

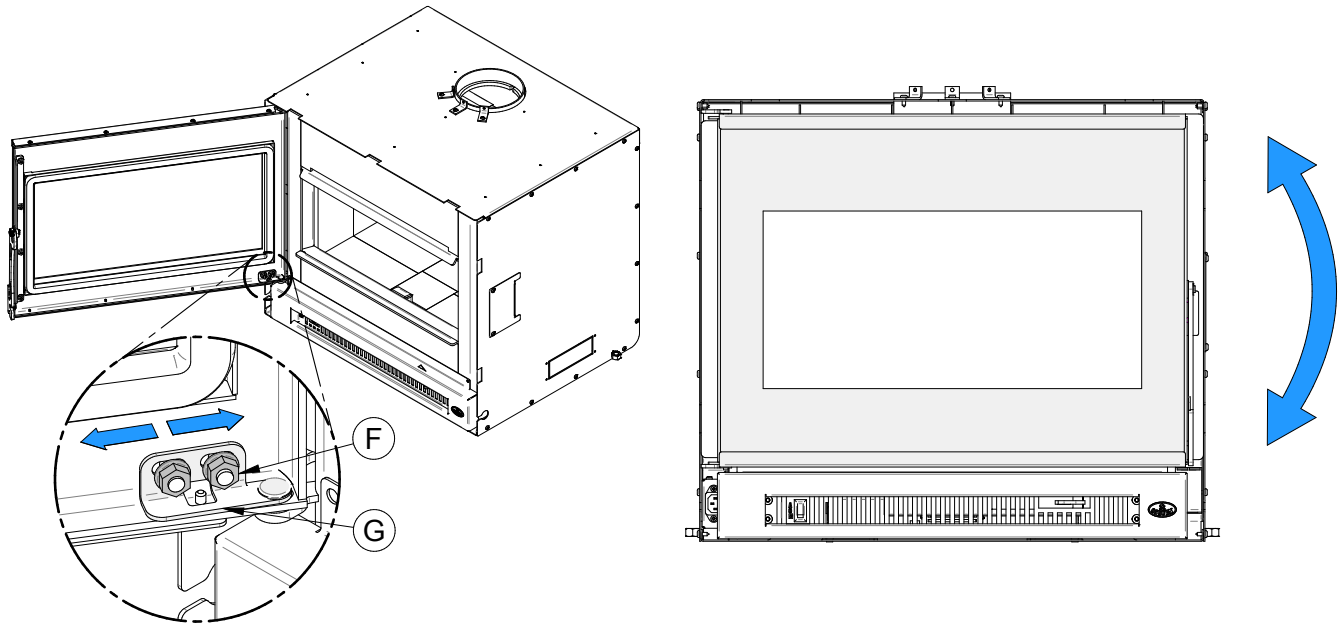

Figure 31: Door angle adjustment

6.3.2 Gasket

It is important to replace the gasket with another having the same diameter and density to maintain a good seal.

1. Remove the door and place it face-down on something soft like a cushion of rags or a piece of carpet.
2. Remove the old gasket from the door. Use a screwdriver to scrape the old gasket adhesive from the door gasket groove.
3. Apply a bead of approximately 5 mm of high temperature silicone in the door gasket groove. Starting from the middle, hinges side, press the gasket into the groove. The gasket must not be stretched during installation.
4. Leave about ½" long of gasket when cutting and press the end into the groove. Tuck any loose fibers under the gasket and into the silicone.
5. Close the door. Do not use the insert for 24 hours.

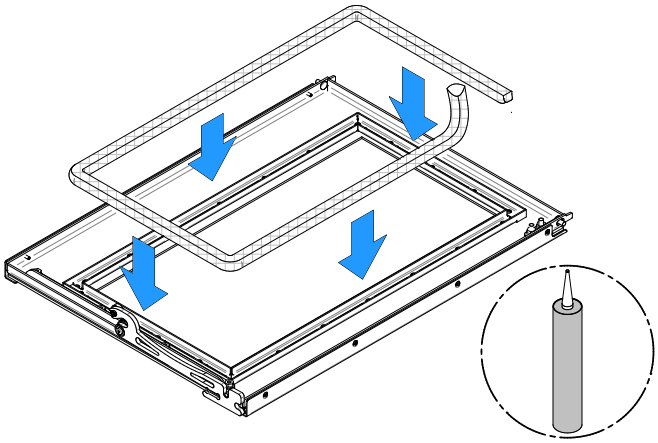

Figure 32: Door gasket

Location	Length	Dimension
Door frame	79 ½" 202 cm	Round ⅞" (23 mm)

6.4 Exhaust System

Wood smoke can condense inside the chimney, forming a inflammable deposit called creosote. If creosote builds up in the system, it can ignite when a hot fire is burned in the insert. A very hot fire can progress to the top of the chimney. Severe chimney fires can damage even the best chimneys. Smouldering, smoky fires can quickly cause a thick layer of creosote to form. When the insert is operated properly, the exhaust from the chimney is mostly clear and creosote builds up more slowly.

6.4.1 Frequency

It is not possible to predict how much or how quickly creosote will form in the chimney. It is important, therefore, to check the build-up in the chimney monthly until the rate of creosote formation is determined. Even if creosote forms slowly in the system, the chimney should be cleaned and inspected at least once each year.

6.4.2 Sweeping the Chimney

Chimney sweeping can be a difficult and dangerous job. People with no chimney sweeping experience will often prefer to hire a professional chimney sweep to inspect and clean the system for the first time. After seeing the cleaning process, some will choose to do it themselves.

The chimney should be checked regularly for creosote build-up. Inspection and cleaning of the chimney can be facilitated by removing the baffle. See «Appendix 4. Air Tubes and Baffle Installation» for more details.

6.4.3 Chimney Fire

Regular chimney maintenance and inspection can prevent chimney fires. If you have a chimney fire, follow these steps:

1. Close the insert door and the air intake control;
2. Alert the occupants of the house of the possible danger;
3. If you require assistance, alert the fire department;
4. If possible, use a dry chemical fire extinguisher, baking soda or sand to control the fire. Do not use water as it may cause a dangerous steam explosion;

Do not use the fireplace again until the insert and its chimney have been inspected by a qualified chimney sweep or a fire department inspector.

PART B - INSTALLATION

7. Masonry Fireplace Requirements

The masonry fireplace must meet the minimum requirements found in the building code enforced locally, or the equivalent, for a safe installation. Contact the local building inspector for requirements in the area. An inspection of the fireplace should include the following:

Condition of the fireplace and chimney

- The masonry fireplace and chimney should be inspected prior to installation, to confirm that they are free from cracks, loose mortar, creosote deposits, blockage, or other signs of deterioration. If evidence of deterioration is noted, the fireplace or chimney should be upgraded and cleaned prior to installation.
- Masonry or steel, including the damper plate, may be removed from the smoke shelf and adjacent damper frame if necessary to accommodate the insert's chimney liner, provided that their removal will not weaken the structure of the fireplace and chimney, and will not reduce protection for combustible materials to less than what is required by the building code.

Chimney caps

- Mesh type chimney caps must have provision for regular cleaning, or the mesh should be removed to eliminate the potential of plugging.

Adjacent Combustibles

- The fireplace should be inspected to make sure that there is adequate clearance to combustibles, both exposed combustibles to the top, side, and front as well as concealed combustibles, in the chimney and mantle area. The local inspector should have information on whether older fireplaces are of adequate construction.

Opening Size

- Refer to section «9.3 Minimum Masonry Opening and Clearances to Combustibles» for suitable size fireplace openings.

8. Safety Information and Standards

- The information given on the certification label affixed to the appliance always overrides the information published, in any other media (owner's manual, catalogues, flyers, magazines and web sites).
- Mixing of appliance components from different sources or modifying components may result in hazardous conditions. Where any such changes are planned, Stove Builder International Inc. Should be contacted in advance.
- Any modification of the appliance that has not been approved in writing by the testing authority violates CSA B365 (Canada), and ANSI NFPA 211 (USA).
- Connect this insert only to a listed stainless steel chimney liner for use with solid fuel.
- If required, a supply of combustion air shall be provided to the room.
- **CAUTION: DO NOT CONNECT TO OR USE IN CONJUNCTION WITH ANY AIR DISTRIBUTION DUCTWORK UNLESS SPECIFICALLY APPROVED FOR SUCH INSTALLATION.**

- **CAUTION: DO NOT CONNECT THIS UNIT TO A CHIMNEY FLUE SERVING ANOTHER APPLIANCE.**
- The insert and its stainless steel chimney liner are to be installed only within a lined masonry chimney and masonry fireplace conforming to building codes for use with solid fuel. Do not remove bricks or mortar from the existing fireplace when installing the insert.
- To be installed as a freestanding room heater with the clearances in the manufacturer's installation instructions. It is strictly forbidden to install this room heater in any factory-built fireplace.

8.1 Regulations Covering Insert Installation

When installed and operated as described in these instructions, this wood insert is suitable for use in residential installations but is not intended for installation in a bedroom.

In Canada, the CSA B365 Installation Code for Solid Fuel Burning Appliances and Equipment and the CSA C22.1 Canadian National Electrical Code are to be followed in the absence of local code requirements. In the USA, the ANSI NFPA 211 Standard for Chimneys, Fireplaces, Vents and Solid Fuel-Burning Appliances and the ANSI NFPA 70 National Electrical Code are to be followed in the absence of local code requirements.

This insert must be installed with a continuous chimney liner of 6" diameter extending from the insert to the top of the chimney. The chimney liner must conform to the Class 3 requirements of CAN/ULC-S635, Standard for Lining Systems for Existing Masonry or Factory-built Chimneys and Vents, or CAN/ULC-S640, Standard for Lining Systems for New Masonry Chimneys.

The insert is not approved for use with a so-called "positive flue connection" to the clay tile of a masonry chimney.

8.2 Certification Label

Since the information given on the certification label attached to the appliance always overrides the information published in any other media, it is important to refer to it to have a safe and compliant installation. The model and the serial number can also be found on the label.

The certification label is usually located on the side of the insert, towards the front. The faceplate may need to be removed to see it. Therefore, it is recommended to note the insert serial number on page 5 of this manual. It will be needed to identify the version of the appliance in the event replacement parts or technical assistance is required. It is also recommended to register the warranty online.

8.3 Masonry Fireplace Throat Damper

If the fireplace draft control system is to remain in the masonry fireplace, it must be locked open for easy access to the chimney liner or removed entirely. If it is removed from the masonry hearth, the notice plate 27009 must be installed in a visible place, inside the masonry hearth. The plate can be found in the owner's manual kit.

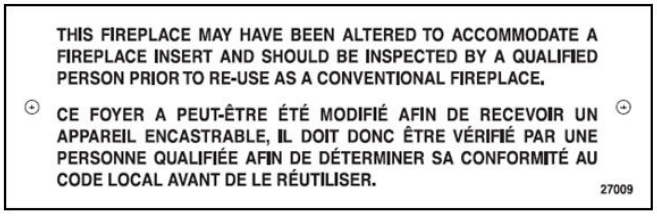
THIS FIREPLACE MAY HAVE BEEN ALTERED TO ACCOMMODATE A FIREPLACE INSERT AND SHOULD BE INSPECTED BY A QUALIFIED PERSON PRIOR TO RE-USE AS A CONVENTIONAL FIREPLACE.

CE FOYER A PEUT-ÊTRE ÉTÉ MODIFIÉ AFIN DE RECEVOIR UN APPAREIL ENCASTRABLE, IL DOIT DONC ÊTRE VÉRIFIÉ PAR UNE PERSONNE QUALIFIÉE AFIN DE DÉTERMINER SA CONFORMITÉ AU CODE LOCAL AVANT DE LE RÉUTILISER.

27009

Figure 33: Notice Plate 27009

9. Clearances to Combustible Material

The clearances shown in this section have been determined by tests according to procedures set out in safety standards ULC S628 (Canada), UL1482 (U.S.A.) and UL737 (U.S.A.). When the insert is installed so that its surfaces are at or beyond the minimum clearances specified, combustible surfaces will not overheat under normal and even abnormal operating conditions.

NO PART OF THE INSERT MAY BE LOCATED CLOSER TO THE COMBUSTIBLE THAN THE MINIMUM CLEARANCE FIGURES GIVEN.

9.1 Installation of a Combustible Mantel Shelf

It is possible to install a combustible shelf with a maximum depth of 12" at a height of at least 27" above the insert. At a height of more than 27", the shelf must still have a maximum depth of 12". Refer to «Figure 34: Shelf Clearances».

Table 2 : Mantel Shelf Clearances

MAXIMUM MANTEL SHELF DIMENSION (Z)	MANTEL SHELF CLEARANCES (X)
12" (305mm) max.	27" (686 mm) min.

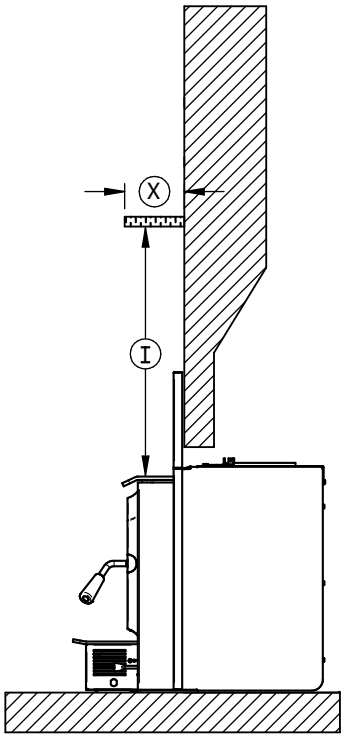

Figure 34: Shelf Clearances

9.2 Floor Protection

It is necessary to have a floor protection made of non-combustible materials that meets the measurements specified in the «Table 3 : Floor Protection» below.

Table 3 : Floor Protection

	FLOOR PROTECTION	
	Canada	**USA**
B	18" (457 mm)	16" (406 mm)
M	8" (203 mm)	N/A
N	N/A	8" (203 mm)

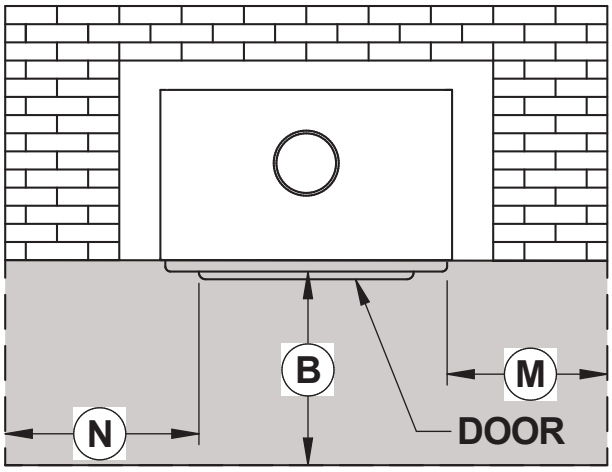

Figure 35: Floor Protection

9.2.1 Installation Raised of 5" and Less

If non-combustible material floor protection needs to be added in front of and level with the hearth extension of the masonry fireplace (F = 5" or less), an R-value equal to or greater than 1.00 is required and should extend at least 23" (584 mm) in front of the unit **(B)**.

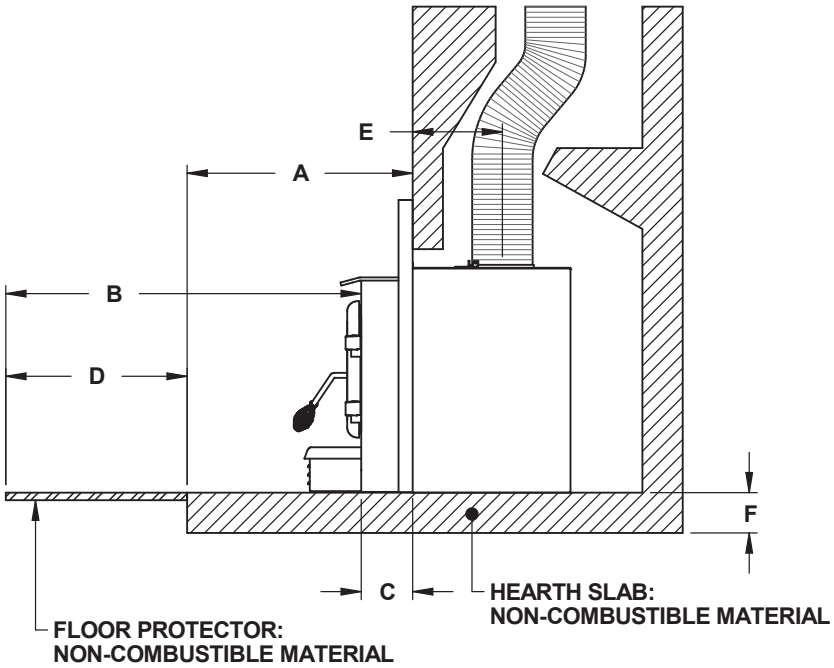

Figure 36: 5" or less raised base installation

9.2.2 Installation Raised of More Than 5"

If the extension of the masonry hearth is raised at least 5" (127 mm) from the floor protection, a non-combustible material, without an R-value, must extend at least 16" (406 mm in USA) or 18" (457 mm in Canada) in front of the unit.

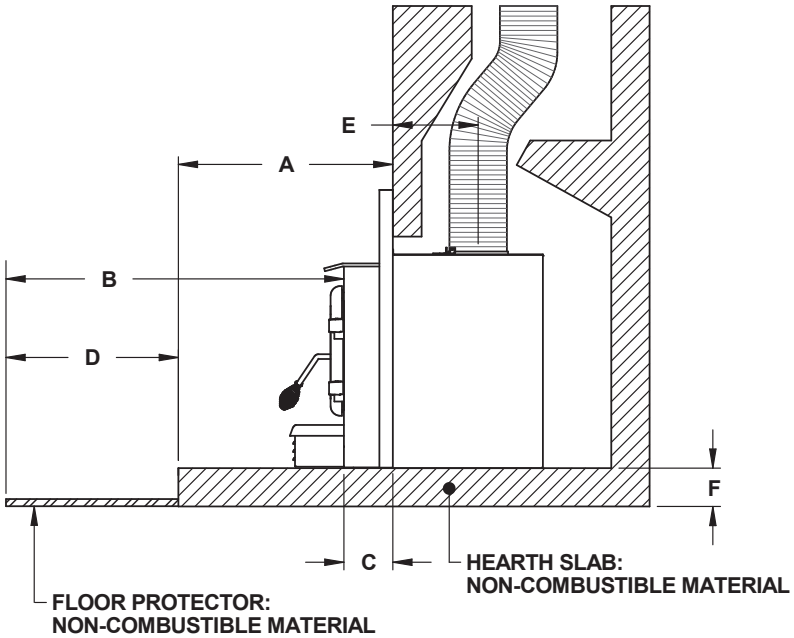

Figure 37: More than 5" raised base installation

9.2.3 R Value

There are two ways to calculate the R-value of the floor protection. First, by adding the R-values of materials used, or by the conversion if the K factor and thickness of the floor protection are given.

To calculate the total R value from R values of the materials used, simply add the R-values of materials. If the result is equal to or greater than the R-value requirements, the combination is acceptable. R-values of some selected materials are shown below :

Table 4 : Thermal Characteristics of Common Floor Protection Materials*

MATERIAL	CONDUCTIVITY (K) PER INCH	RESISTANCE (R) PER INCH THICKNESS
Micore® 160	0.39	2.54
Micore® 300	0.49	2.06
Durock®	1.92	0.52
Hardibacker®	1.95	0.51
Hardibacker® 500	2.3	0.44
Wonderboard®	3.23	0.31
Cement mortar	5.00	0.2
Common brick	5.00	0.2
Face brick	9.00	0.11
Marble	14.3 – 20.00	0.07 – 0.05
Ceramic tile	12.5	0.008
Concrete	1.050	0.950
Mineral wool insulation	0.320	3.120

*Information as reported by manufacturers and other resources
** Horizontal still air can't be «stack» to accumulate R-values; each layer must be separated with another non-combustible material.

MATERIAL	CONDUCTIVITY (K) PER INCH	RESISTANCE (R) PER INCH THICKNESS
Limestone	6.5	0.153
Ceramic board (Fibremax)	0.450	2.2
Horizontal still air (⅛"thick)	0.135	0.920**

Example:

Required floor protection R of 1.00. Proposed materials: four inches of brick and one inch of Durock® board.

Four inches of brick (R = 4 x 0,2 = 0,8) plus 1 inch of Durock® (R = 1 x 0.52 = 0.52).

0.8 + 0.52 = 1.32.

This R value is larger than the required 1.00 and is therefore acceptable.

In the case of a known K and thickness of alternative materials to be used in combination, convert all K values to R by dividing the thickness of each material by its K value. Add R values of the proposed materials as shown in the previous example.

Example:

K value = 0.75

Thickness = 1

R value = Thickness/K = 1/0.75 = 1.33

9.3 Minimum Masonry Opening and Clearances to Combustibles

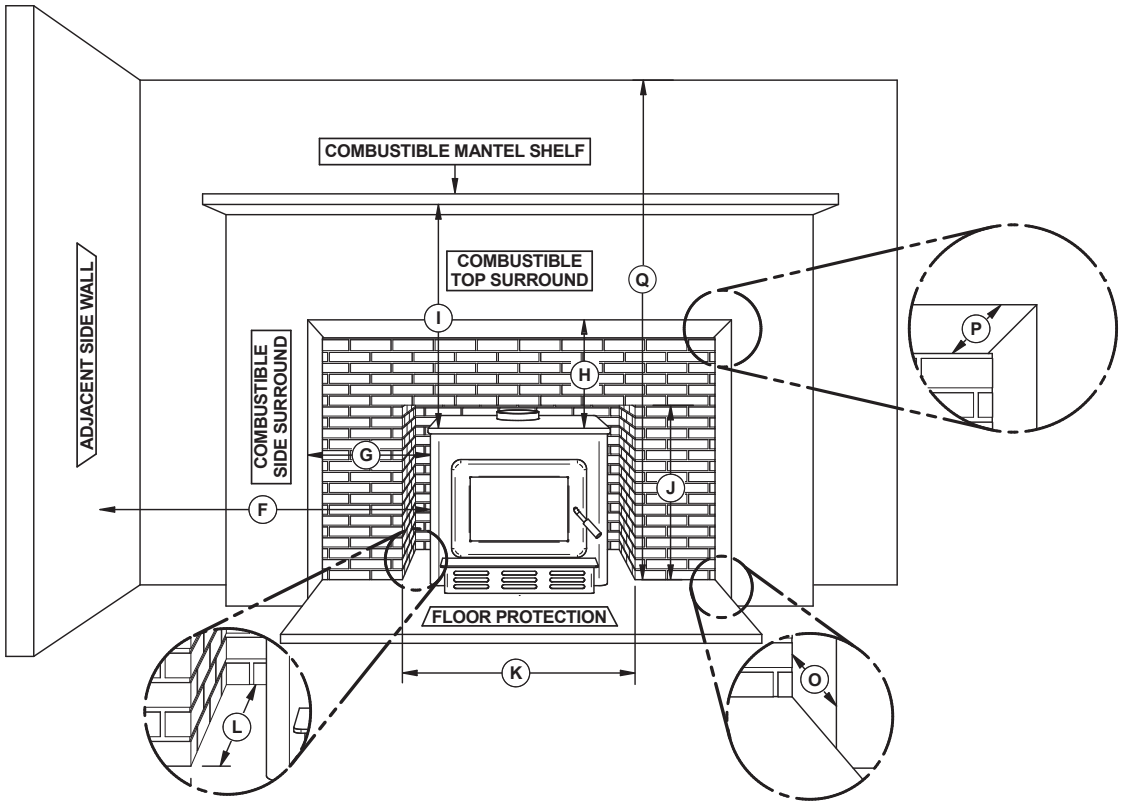

Figure 38: Masonry Opening and Clearances

	CLEARANCES
F	16" (406 mm)
G	9" (229 mm)
H	27" (686 mm)
I	27" (686 mm)
Q	84" (213 cm)

	MINIMUM MASONRY OPENING
J	24 ⅝" (625 mm)
K	29" (737 mm)*
L	20 ¾" (528 mm)

	MAXIMUM THICKNESS
O	5" (127 mm)
P	12" (305 mm)

* If a fresh air intake is required, it is recommended to add at least 4" to the width of the minimum opening of the hearth.

10. The Venting System

10.1 General

The venting system, made of the chimney and the liner inside the chimney, acts as the engine that drives the wood heating system. Even the best insert will not function safely and efficiently as intended if it is not connected to a suitable chimney and liner system.

The heat in the flue gases that pass from the insert into the chimney is not waste heat. This heat is what the chimney uses to make the draft that draws in combustion air, keeps smoke inside the insert and safely vents exhaust to outside. The heat in the flue gas can be seen as the fuel the chimney uses to create draft.

10.2 Block-off Plate

To reduce the possibility of a cold air back draft from the masonry chimney into the room, the installation of a sheet metal block-off plate **(A)** is recommended. When fabricating the block-off plate, cut the pipe hole slightly larger than the liner diameter and pass the liner through the hole. Install the block-off plate and secure it with masonry nails. Seal the joints between the plate and the chimney with high temperature silicone and use stove cement to seal between the pipe and the plate.

In Canada, the CSA B365 Standard permits «Roxul» type wool to be stuffed around the liner as it passes through the throat area as an alternative to a sheet metal block-off plate. However, this method is less efficient than using a plate.

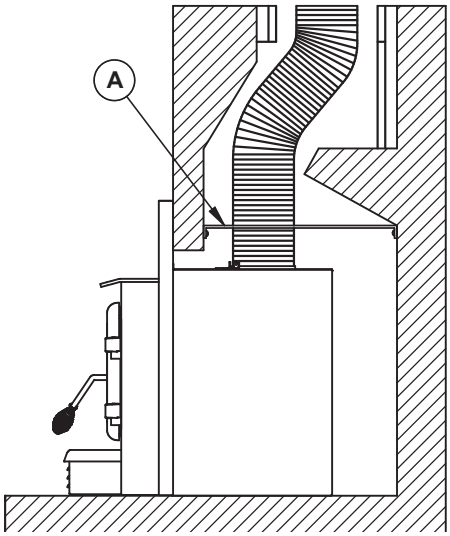

Figure 39: Block-off Plate

Figure 40: Block-off Plate

10.3 Suitable Chimneys

This wood insert will provide optimum efficiency and performance when connected to a 6" diameter chimney liner. The connection to a chimney having a diameter of at least 5" (Canada only) is permitted if it allows the proper venting of combustion gases and that such application is verified and authorized by a qualified installer. Otherwise, the diameter of the flue should be 6". The reduction of the liner diameter to less than 6" should only be done if the total height of the masonry chimney is greater than 20 feet.

10.4 Chimney Liner Installation

The use of a chimney liner (rigid or flexible) is recommended to ensure the best performance. To ensure an optimal draft, it is also strongly recommend adding a minimum of 12" rigid liner between the top of the masonry chimney and the rain cap. In all cases, liners should be installed in accordance with the liner manufacturer's instructions, including instructions for extension above the masonry.

Use chimney liners listed UL 1777, ULC S635 or CAN/ ULC S640.

In order to connect the insert to the liner, refer to section «10.5 Liner Connection».

ATTENTION INSTALLER:

When positioning the unit in a fireplace opening, prior to the flue installation, install the insert into the opening until the top lip of air jacket is flush with fireplace facing.

If lag bolts or anchors are to be used to secure the insert, the hole location should be marked with the unit in place. Remove the insert and locate the anchors.

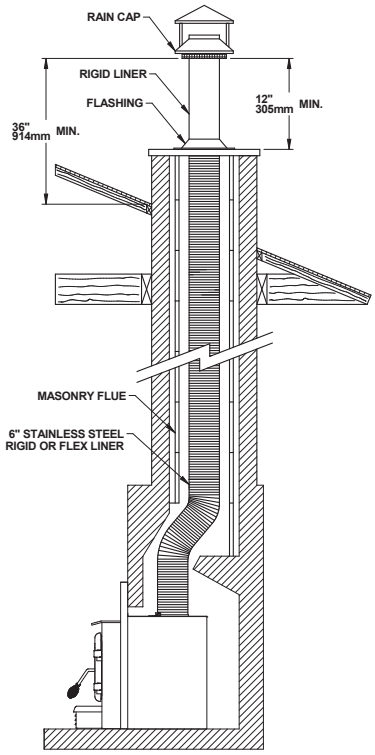

Figure 41: Liner Installation

10.5 Liner Connection

Two options are possible to connect the liner to the insert:

10.5.1 Liner Starter Adaptor

Install the chimney liner starter adapter, provided with the chimney liner. Follow the chimney liner starter adapter manufacturer's instructions.

In order to connect the chimney liner starter adapter to the flue outlet, install three brackets with the three screws, all provided in the user manual, on top of the insert. The long end of the brackets must be attached to the insert. Insert the chimney liner into the flue collar of the unit and secure the liner to the brackets with three self-tapping screws (not included).

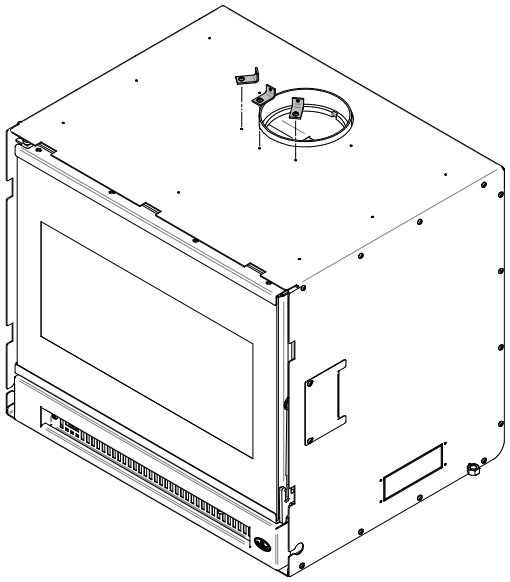

Figure 42: Securing the brackets

The dealer may offer a liner fastening system, sold separately. Follow the installation instructions provided with the liner fastening system.

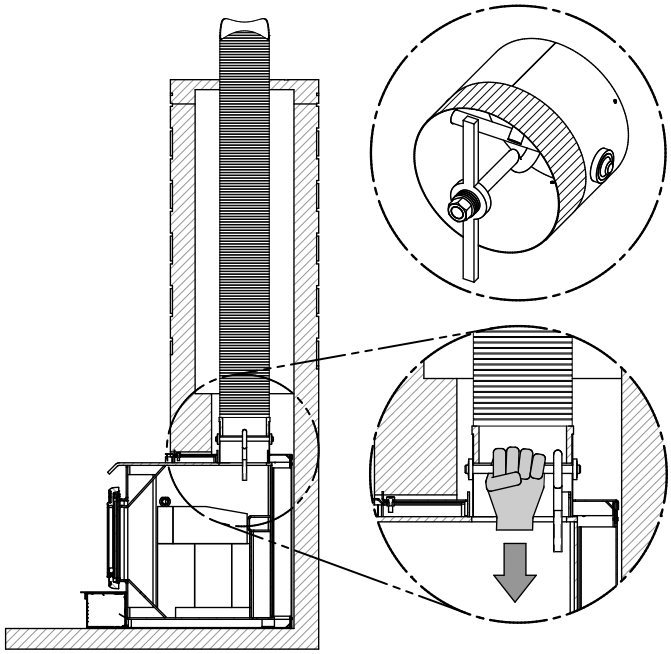

Figure 43: Liner fastening system

10.5.2 Liner Offset Adapter

A liner offset adapter, sold separately, can also be installed. This should only be installed if no other option is possible and if the total height of the fireplace and chimney is at least 20 feet. This kind of adaptor is restricting the free flow of exhaust gases and may result in smoke roll-out from the insert when the door is open for reloading. When installing a liner offset adapter, secure the three brackets provided in the user manual on top of the insert. The long end of the brackets must be attached to the insert. Then, follow the instructions in the manual provided with the liner offset adapter kit.

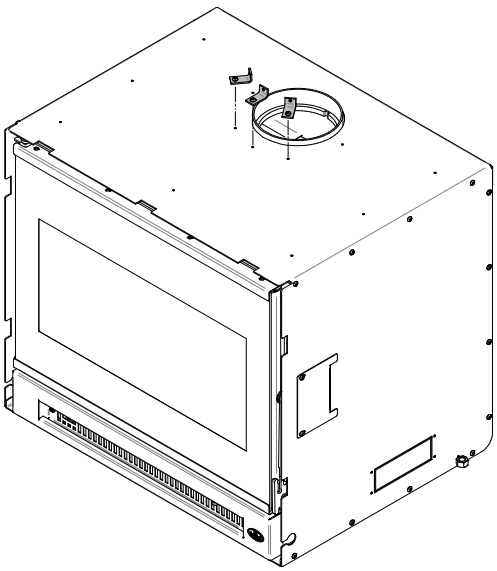

Figure 44: Securing the brackets

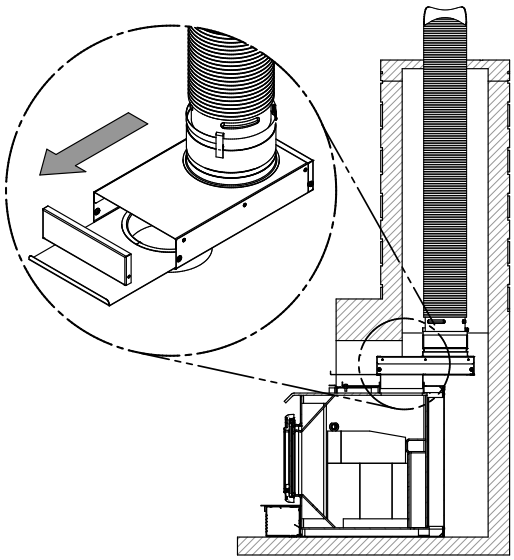

Figure 45: Offset liner adaptor

10.6 Minimum Chimney Height

The top of the chimney should be tall enough to be above the air turbulence caused when wind blows against the house and its roof. The chimney must extend at least 1 m (3 ft.) above the highest point of contact with the roof, and at least 60 cm (2 ft.) higher than any roof line or obstacle within a horizontal distance of 3 m (10 ft.).

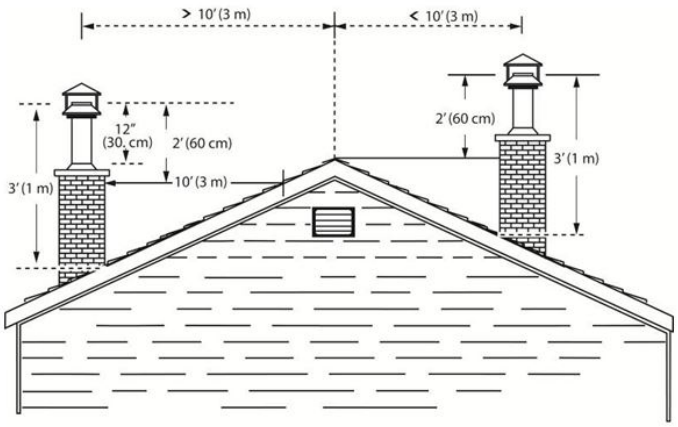

10.7 Chimney Location

Because the venting system is the engine that drives the wood heating system, it must have the right characteristics. The signs of bad system design are cold back drafting when there is no fire in the insert, slow kindling of new fires, and smoke roll-out when the door is open for loading.

When it is cold outside, the warm air in the house is buoyant so it tends to rise. This creates a slight pressure difference in the house. Called 'stack effect', it produces a slightly negative pressure in the lower part of the house (compared to the outside) and a slightly positive pressure zone in the high part of the house. If there is no fire burning in a heater connected to a chimney that is shorter than the warm space inside the house, the slight negative pressure in the lower part of the house will compete against the desired upward flow in the chimney. This occurs for the two following reasons:

First, the chimney runs up the outside of the house, so the air in it is colder and denser than the warm air in the house. And second, the chimney is shorter than the heated space of the house, meaning the negative pressure in the lower part of the house will draw cold air down the chimney, through the insert and into the room. Even the finest insert will not work well when connected to this chimney.

Figure 46: Chimney location in the house

10.8 Supply of Combustion Air

In Canada, wood inserts are not required to have a combustion air supply from outside. Research has shown that outside air supply do not compensate for the depressurization of the house and may not be sufficient to provide a supply of combustion air in windy weather. However, to reduce the risks against smoke spillage due to house depressurization, a carbon monoxide (CO) detector is required in the room where the insert is installed. The CO detector will provide warning if for any reason the wood insert fails to function correctly.

The safest and most reliable supply of combustion air for a wood insert is from the room in which it is installed. Room air is already preheated so it will not chill the fire, and its availability is not affected by wind pressures on the house. Contrary to commonly expressed concerns, almost all tightly sealed new houses have enough natural leakage to provide a small amount of air needed by the insert. The only case in which the wood insert may not have adequate access to combustion air is if the operation of a powerful exhaust device (such as a kitchen range exhaust) causes the pressure in the house to become negative relative to outdoors.

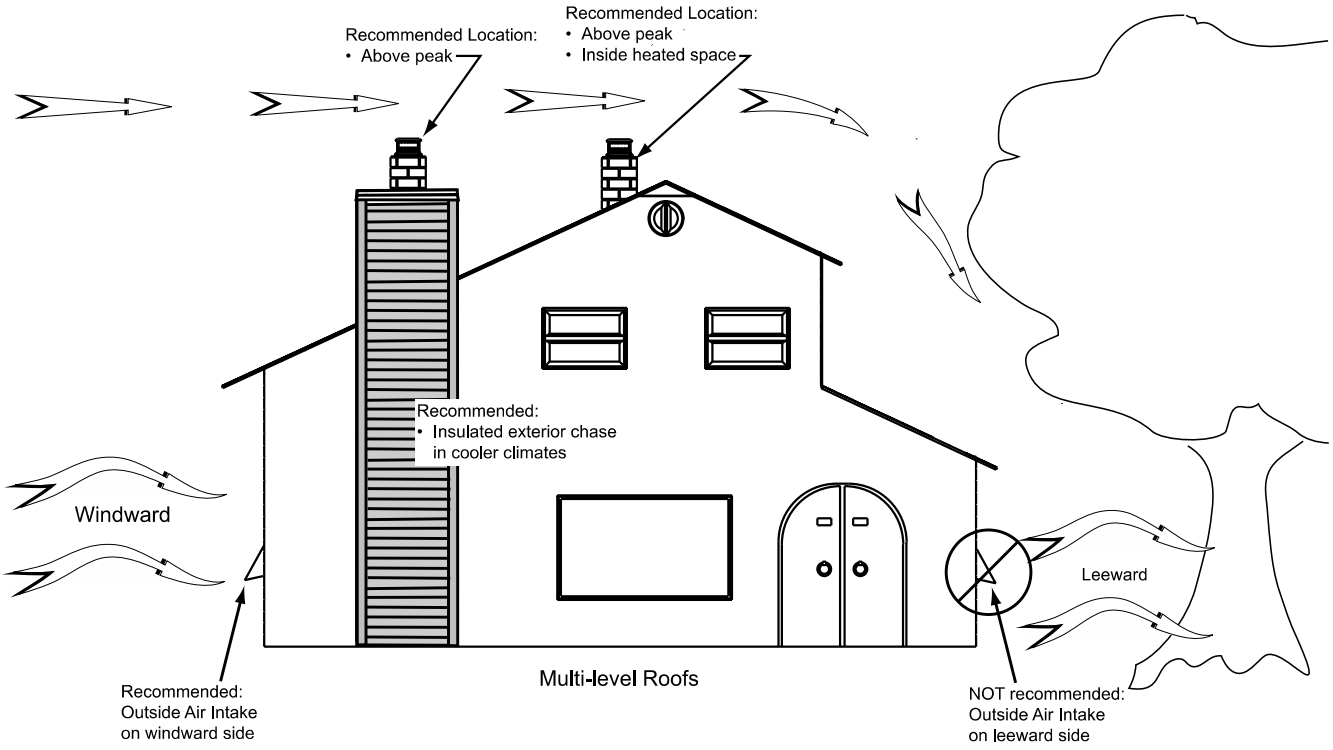

Figure 47: Air supply in conventional houses

If an air intake is installed through the wall of the house, its pressure can vary during windy weather. If there are changes in wood insert performance in windy weather, and in particular if smoke puffs from the insert, the air duct should be disconnected from the insert to determine if it is the cause of the problem. In some windy conditions, negative pressure at the duct weather hood outside the house wall may draw hot exhaust gases from the insert backwards through the duct to outdoors. Check the outdoor air duct for soot deposits when the full system is cleaned and inspected at least once each year.

APPENDIX 1. FACEPLATE INSTALLATION

Three faceplates are available with this wood insert. For more details about the installation, refer to the faceplate installation instructions.

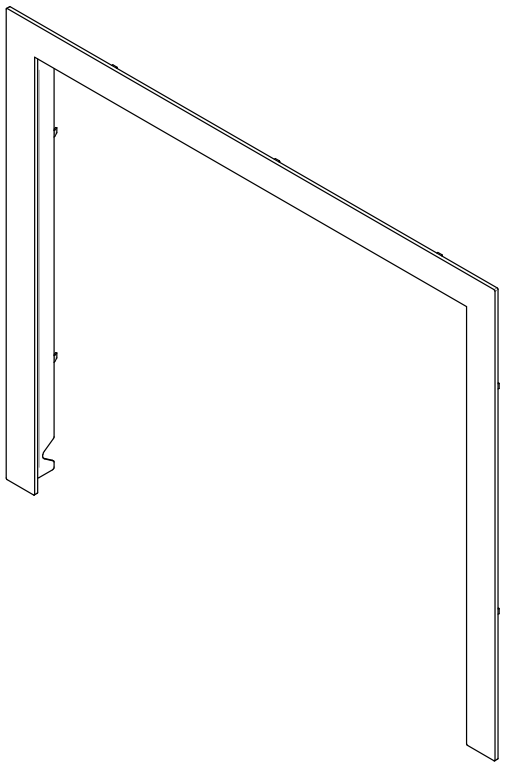

Figure 48: U shaped narrow faceplate

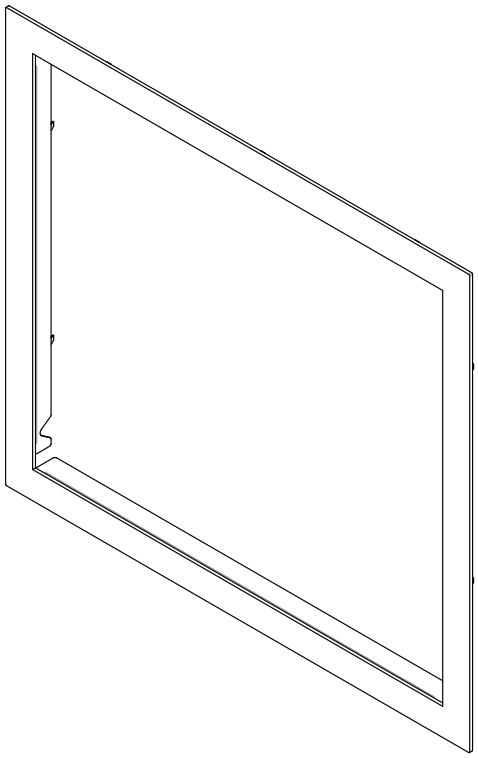

Figure 49: Narrow faceplate

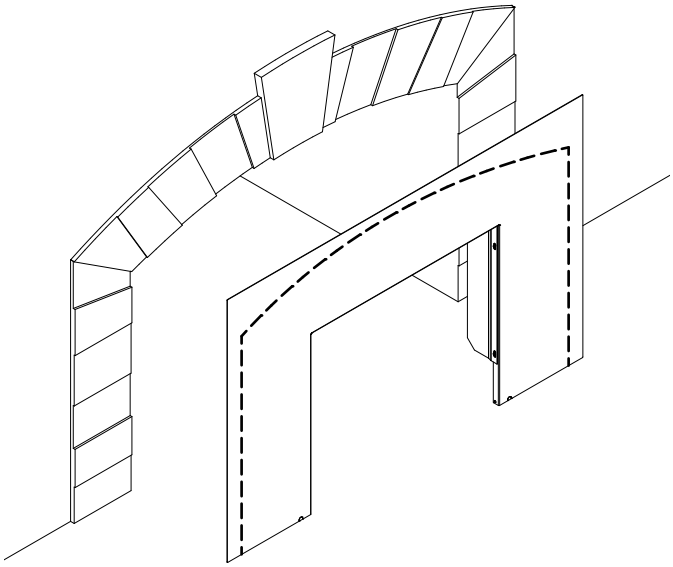

Figure 50: Cuttable faceplate

APPENDIX 2. OPTIONAL FRESH AIR INTAKE KIT INSTALLATION

Only remove the knock-out that will be connected to the fresh air inlet.

Using pliers, remove the rectangular knockout plate **(A)** located on the left or right side of the convection air jacket. Choose the side that is best for the installation.

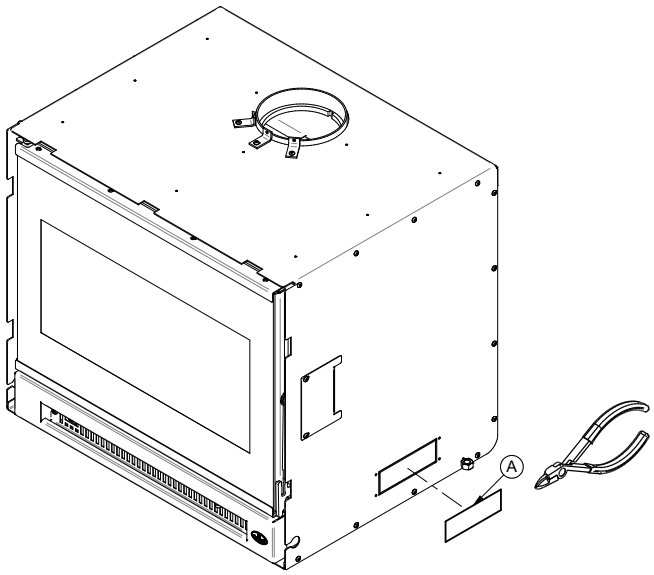

Install the fresh air kit adapter **(B)** using 4 screws **(C)**. Secure the flexible pipe[1] **(E)** to the adapter **(B)** using one of the adjustable pipe clamps **(D)**. Secure the other end of the pipe to the outside wall termination **(F)** using the second adjustable pipe clamp **(D)**. The outside wall termination **(F)** must be installed outside of the building.

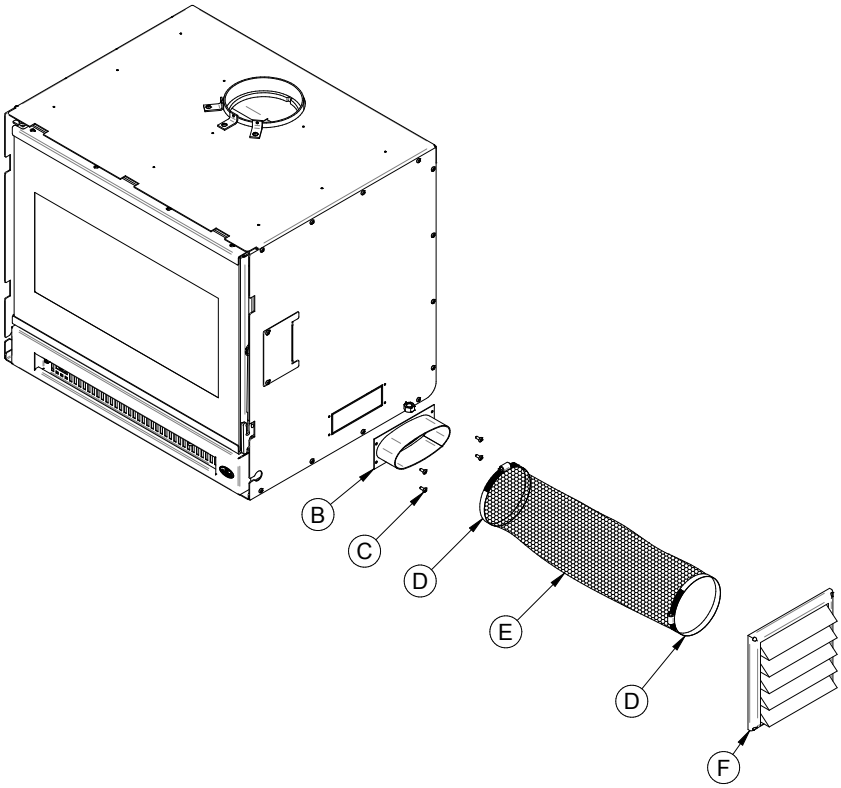

[1] The pipe must be HVAC type, insulated, and must comply with ULC S110 and/or UL 181, Class 0 or Class 1.

APPENDIX 3. BLOWER REPLACEMENT

1. Unplug the blower and remove all electrical sources on the wood insert.
2. Remove the bottom faceplate by removing the four screws holding it in place.

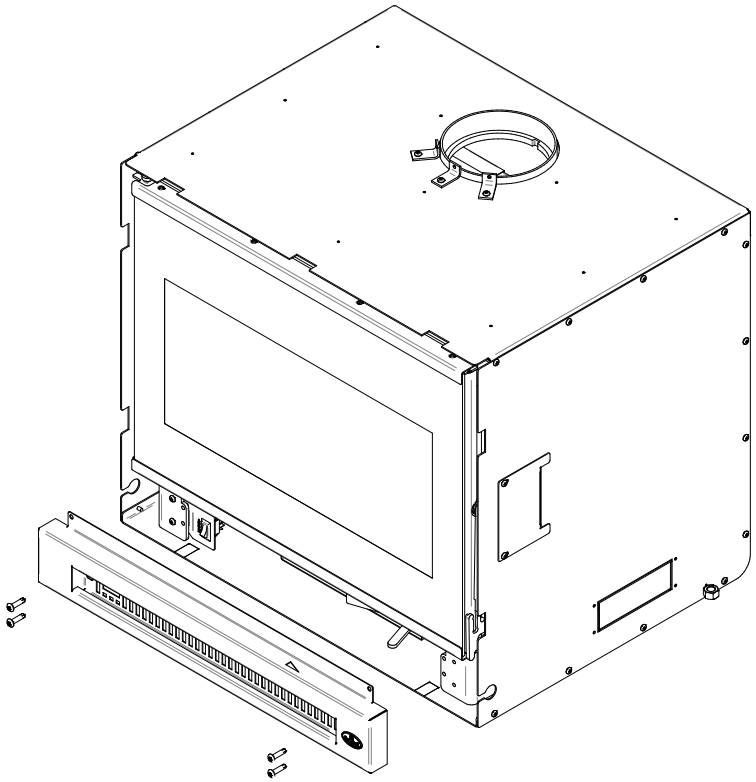

3. Locate the cover under the wood insert.

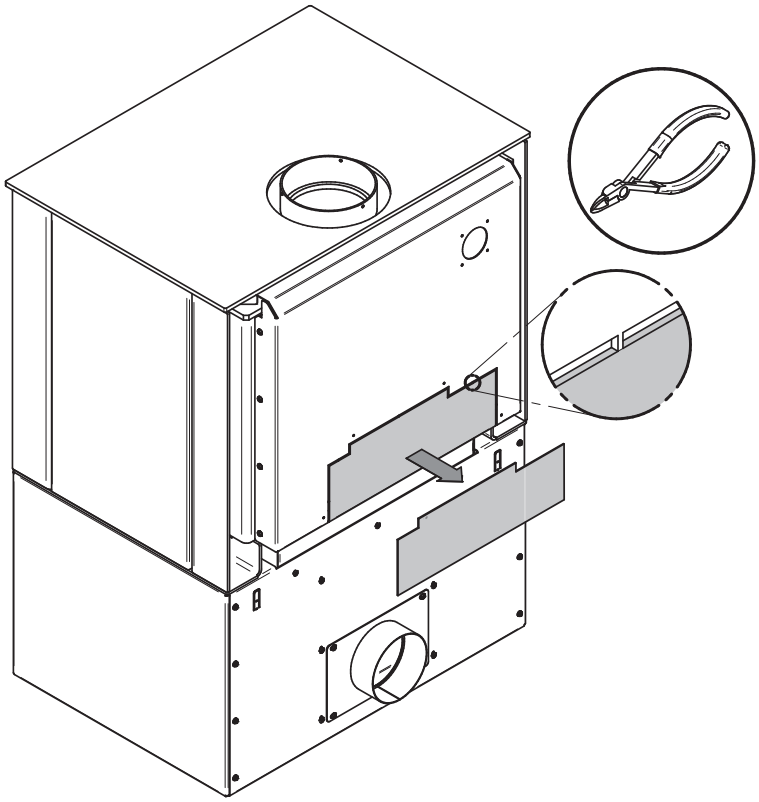

4. Push and rotate counterclockwise to remove the cover.

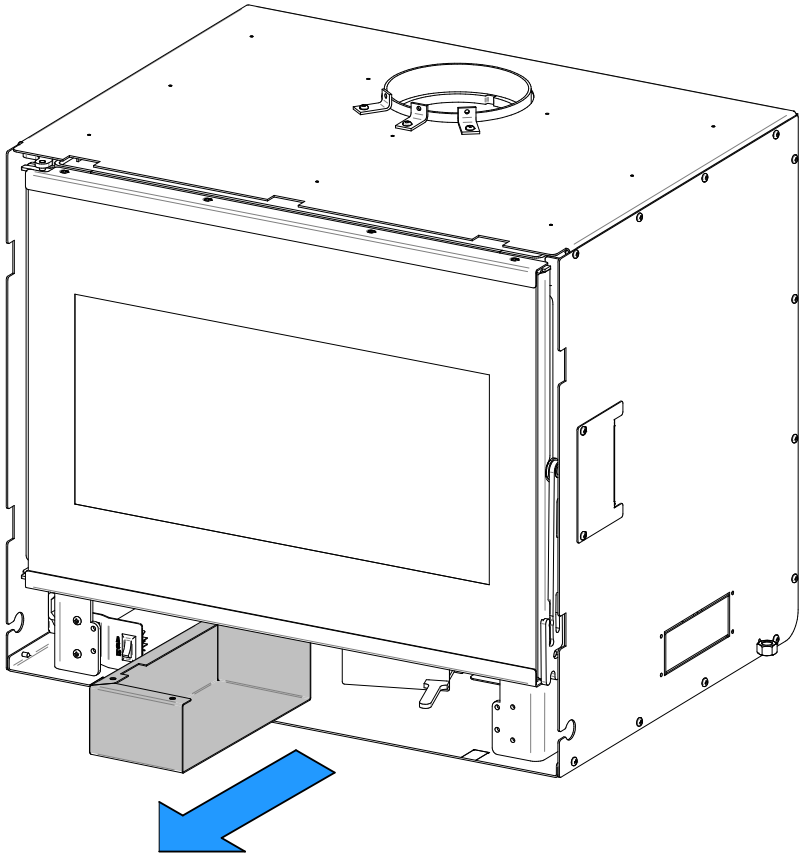

5. Remove both wing nuts **(A)** holding the blower mounting plate.

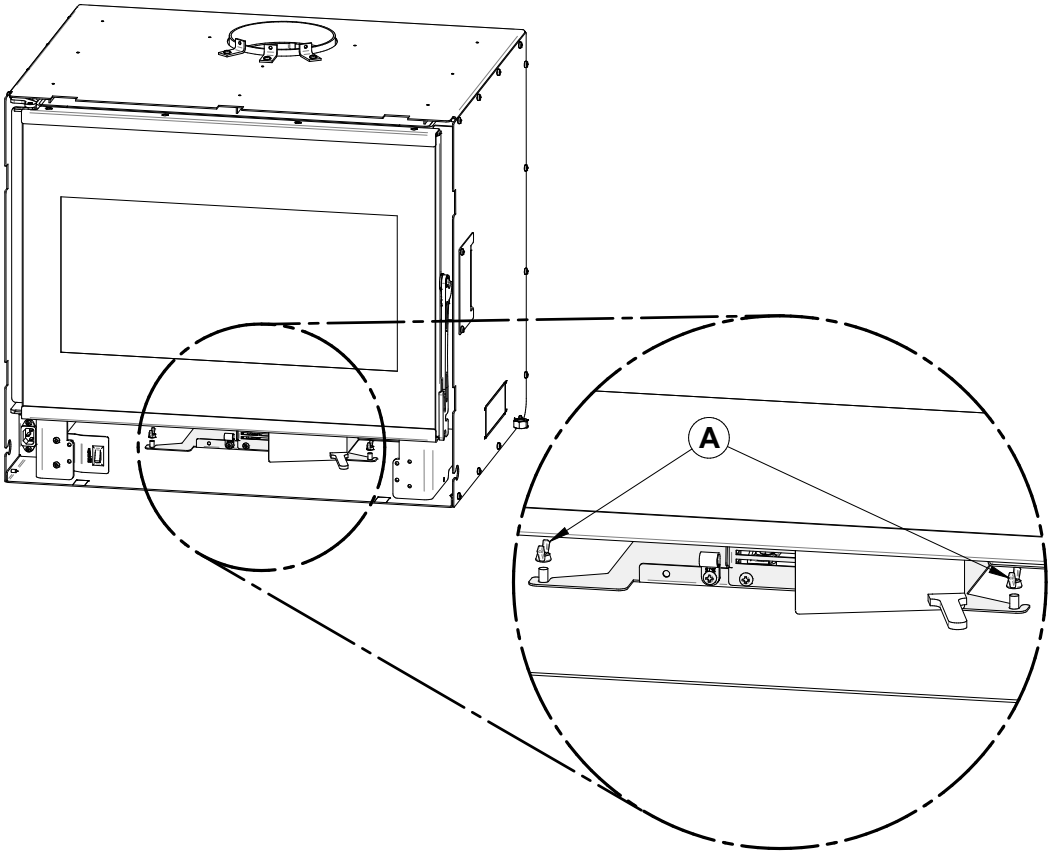

6. Rotate the blower counterclockwise and gently pull on the blower.

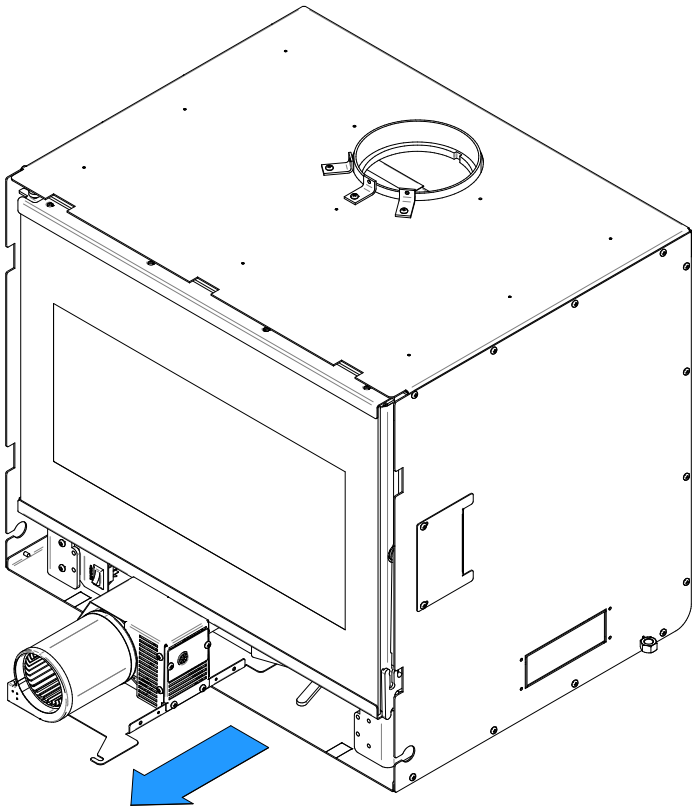

7. Remove both screws **(B)** and gently pull on the plate **(A)**. Unplug the blower wires **(C)**. Once the blower is unplugged, pull gently for removal.

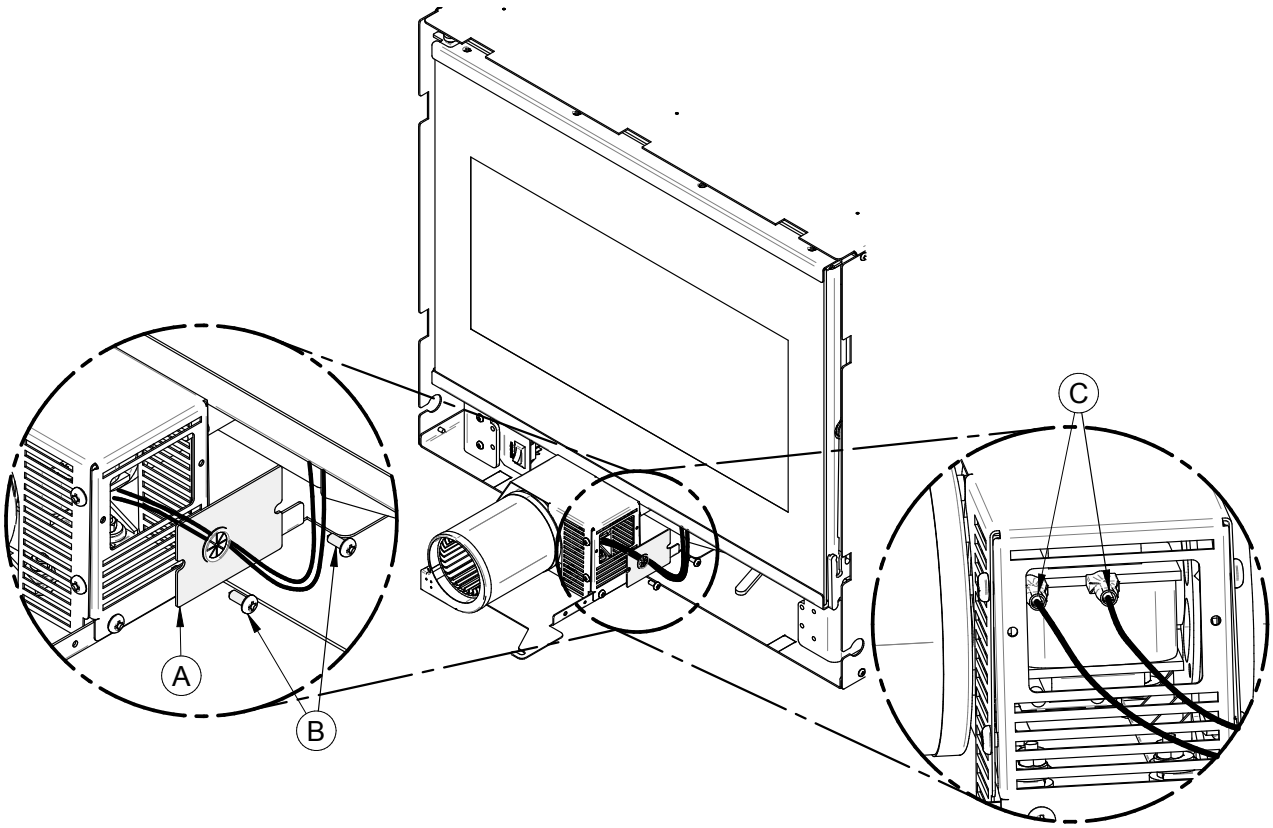

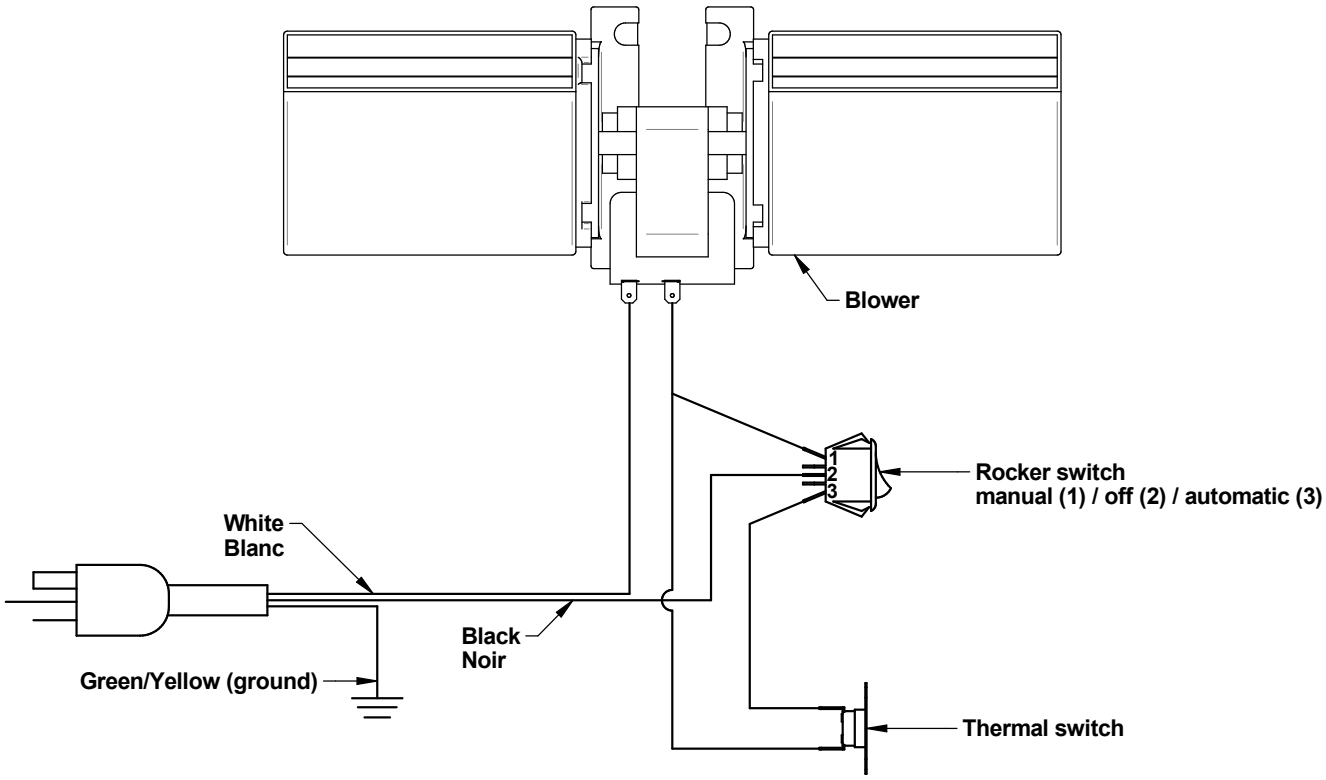

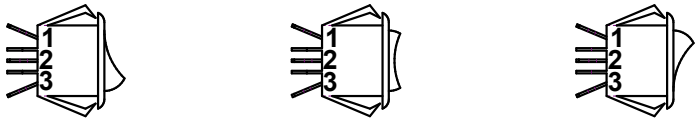

(AUTO) **(OFF)** **(MANUAL)**

APPENDIX 4. AIR TUBES AND BAFFLE INSTALLATION

1. Starting with the rear tube, lean and insert the right end of the secondary air tube into the rear right channel hole. Then lift and insert the left end of the tube into the rear left channel.

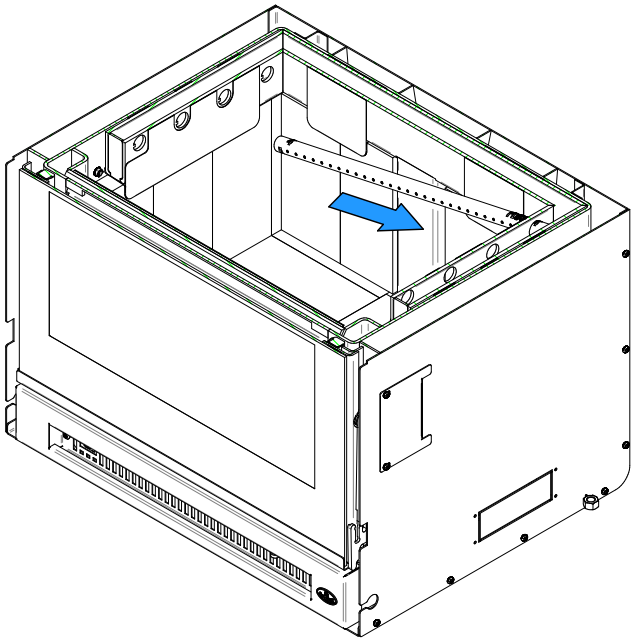

2. Align the notch in the left end of the tube with the key of the left air channel hole. Using a « Wise grip » hold the tube and lock it in place by turning the tube. Make sure the notch reaches the end of the key way.

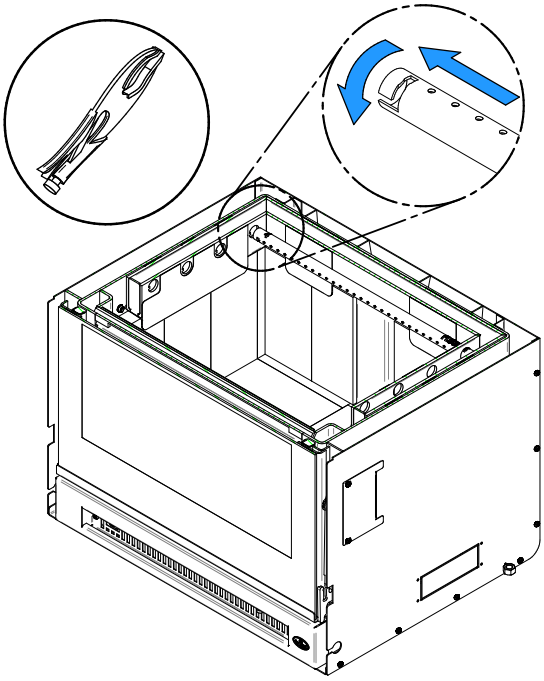

3. Repeat steps 1 and 2 for the two tubes in the back then *install the baffle before installing the two front tubes*.

4. To remove the tubes use the above steps in reverse order.

Note that secondary air tubes **(B)** *can be replaced without removing the baffle board* **(A)** *and that all tubes are identical.*

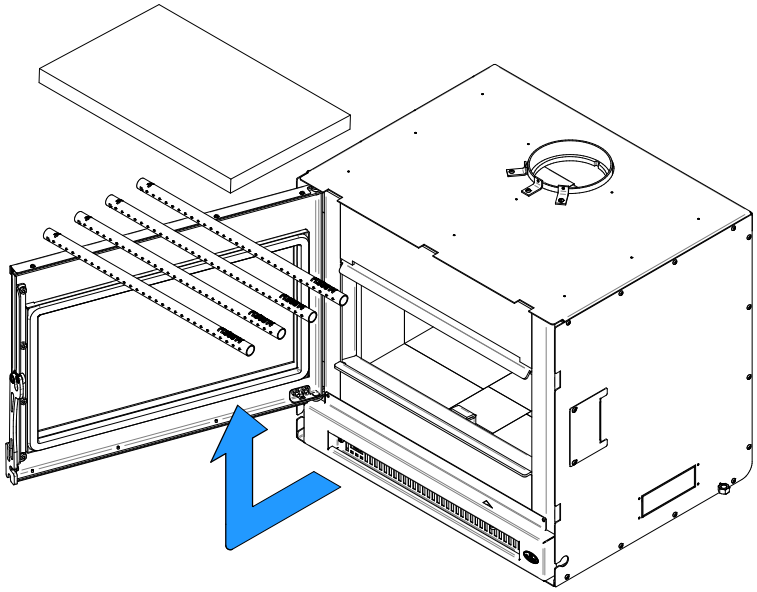

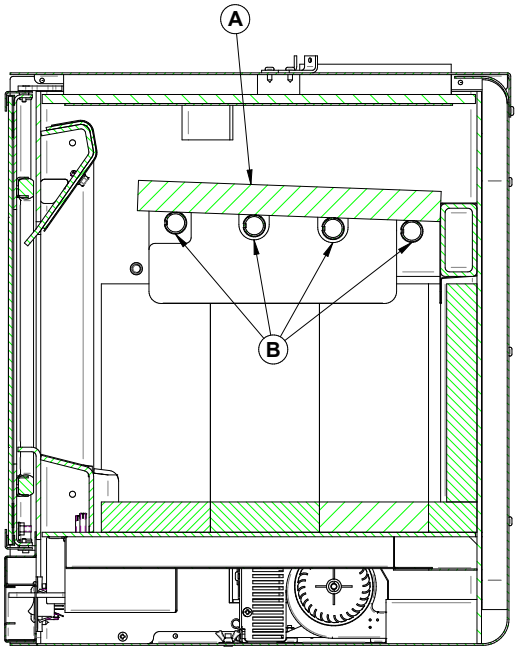

APPENDIX 5. LOG RETAINERS INSTALLATION

1.

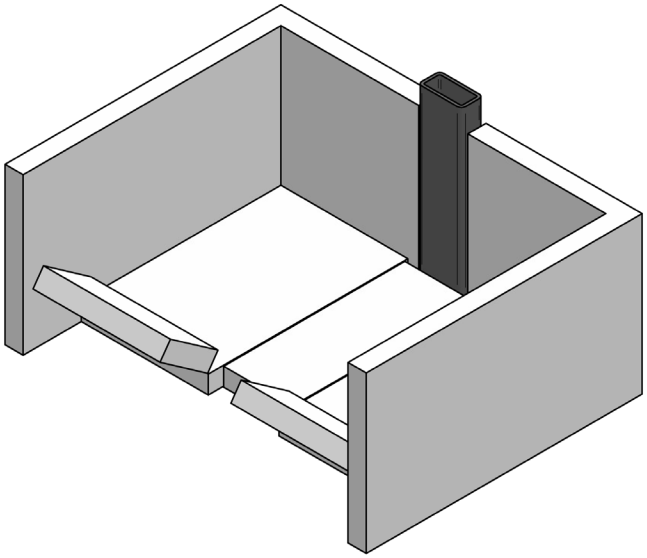

2.

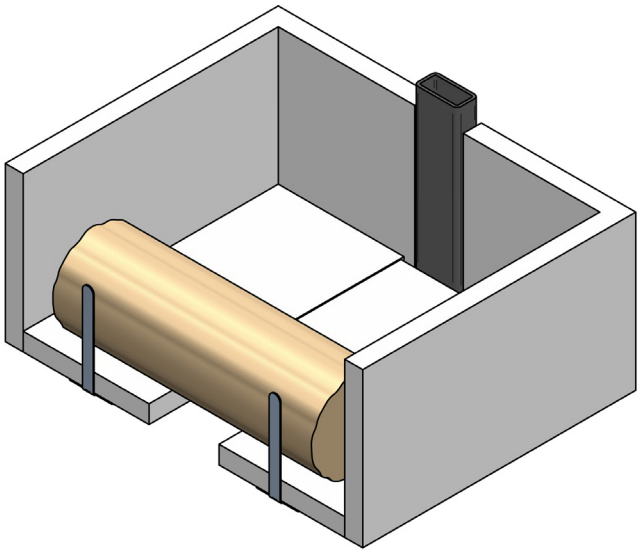

3.

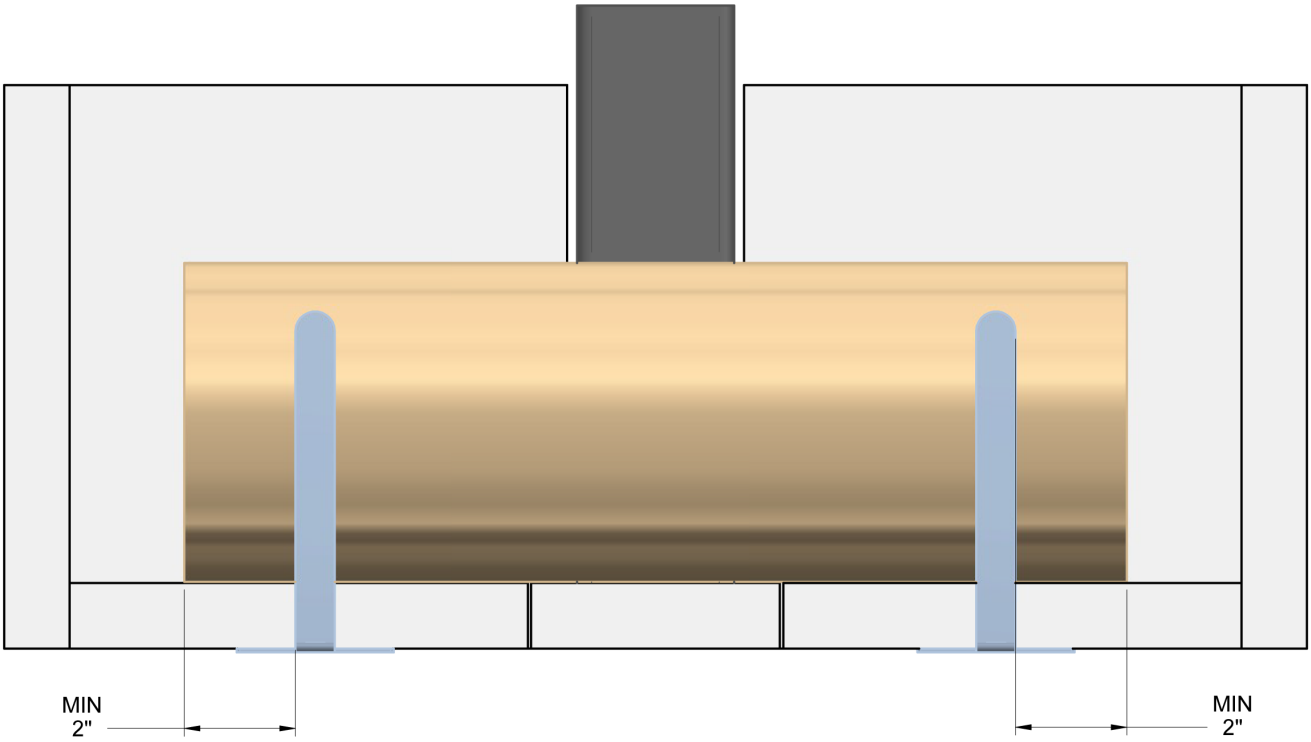

APPENDIX 6. OPTIONAL REFRACTORY PANELS INSTALLATION

1. Remove the center floor bricks (2).

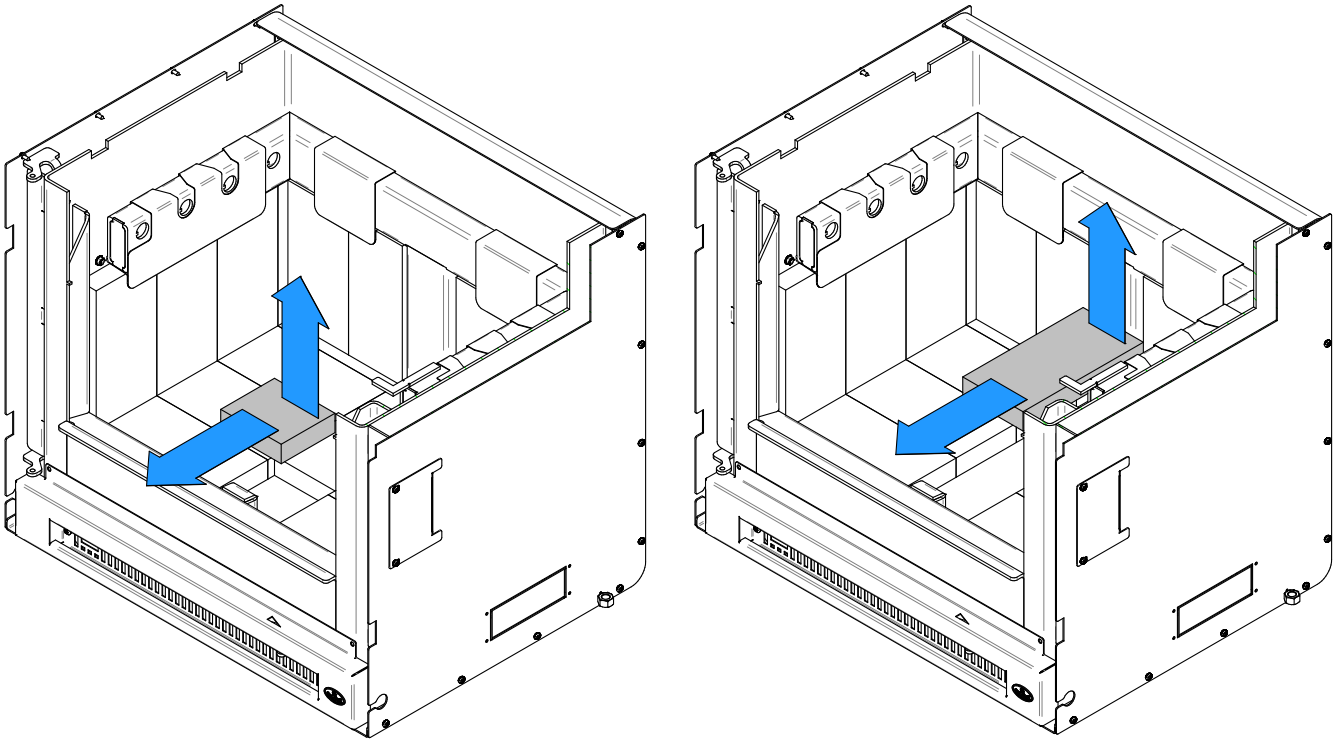

2. Remove the other floor bricks (6). Then, remove the back bottom bricks (2).

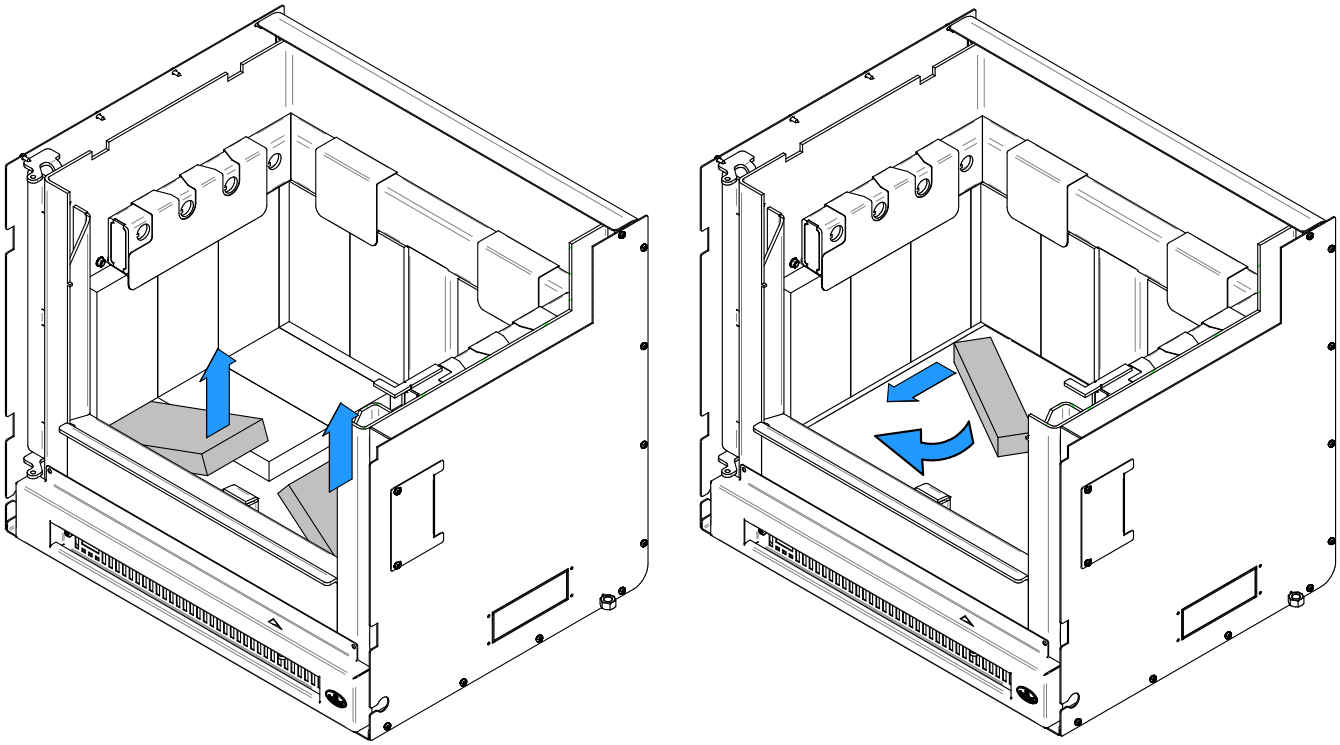

3. Remove the back bricks (4), then remove the back left brick (1).

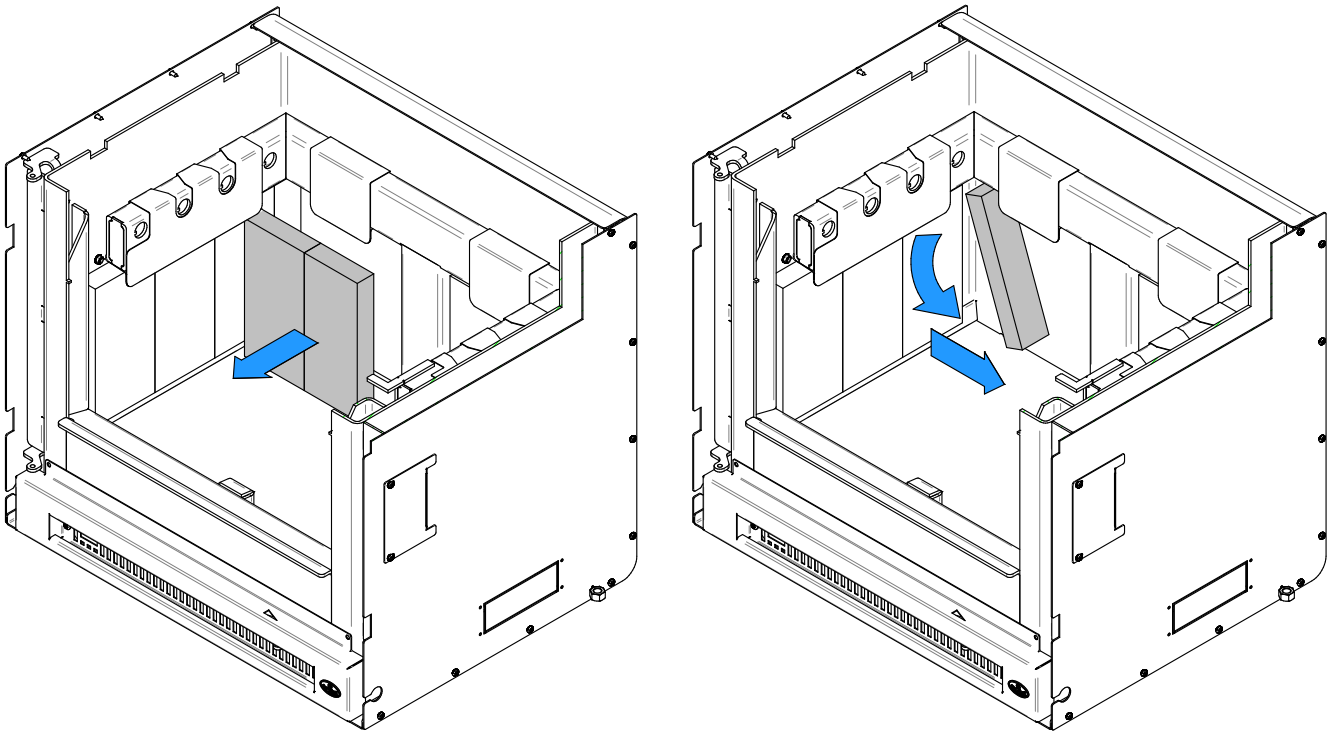

4. Remove the brick retainer (1) and the left bricks (3). Repeat on the right side.

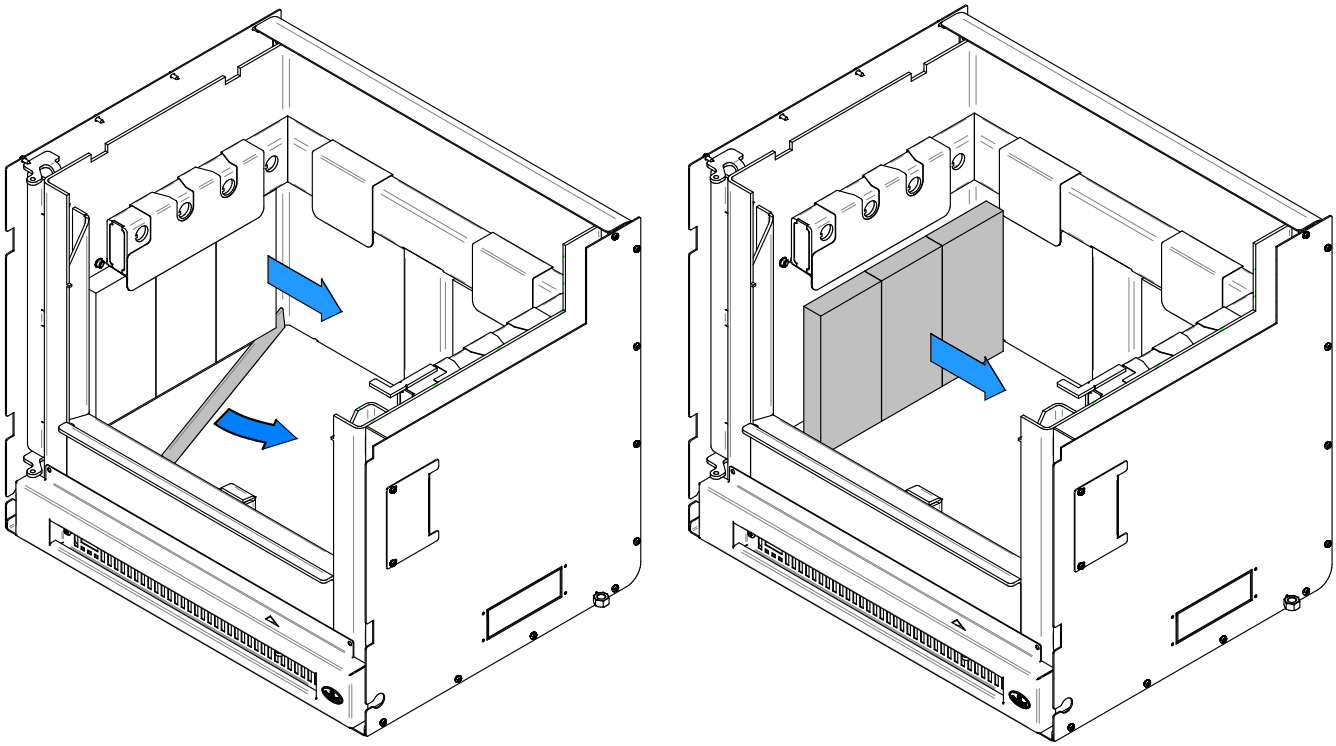

5. Remove the retainers (4) and install the back refractory bricks (2). The retainers cannot be reused after being removed so they can be disposed of.

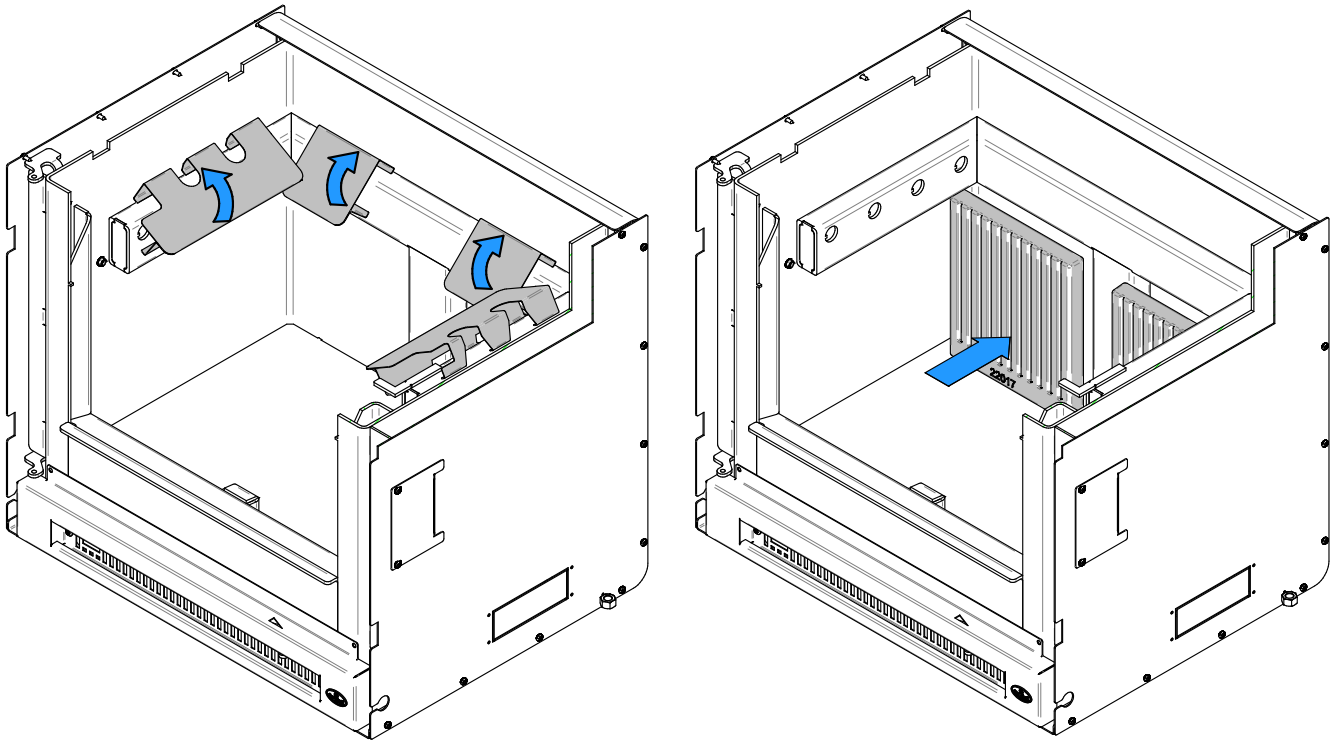

6. Install the sides (2) refractory slabs.

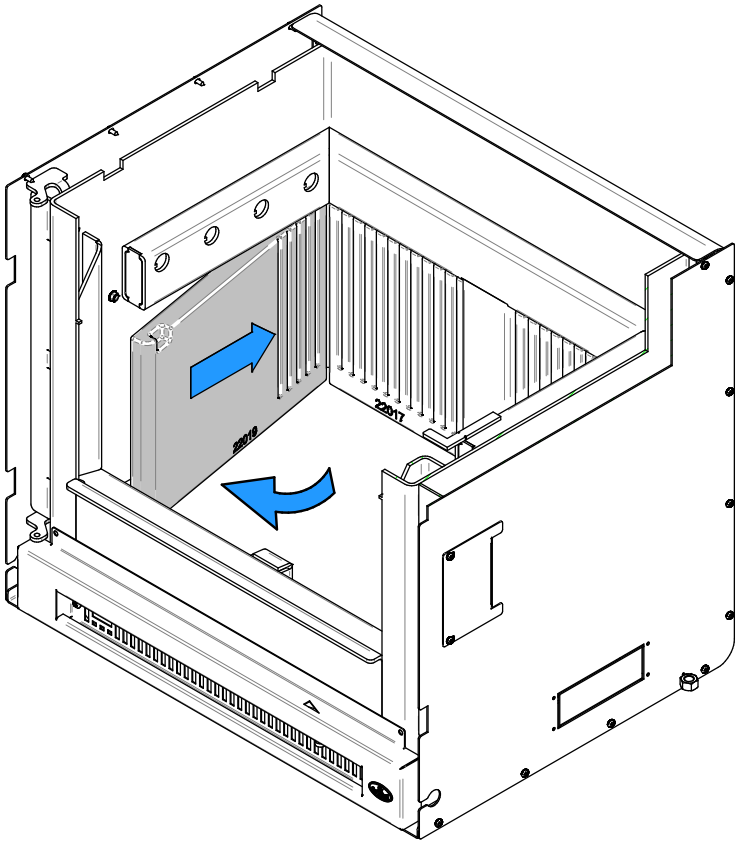

7. Install the refractory slab retainer (2) on both sides and screw them in place .

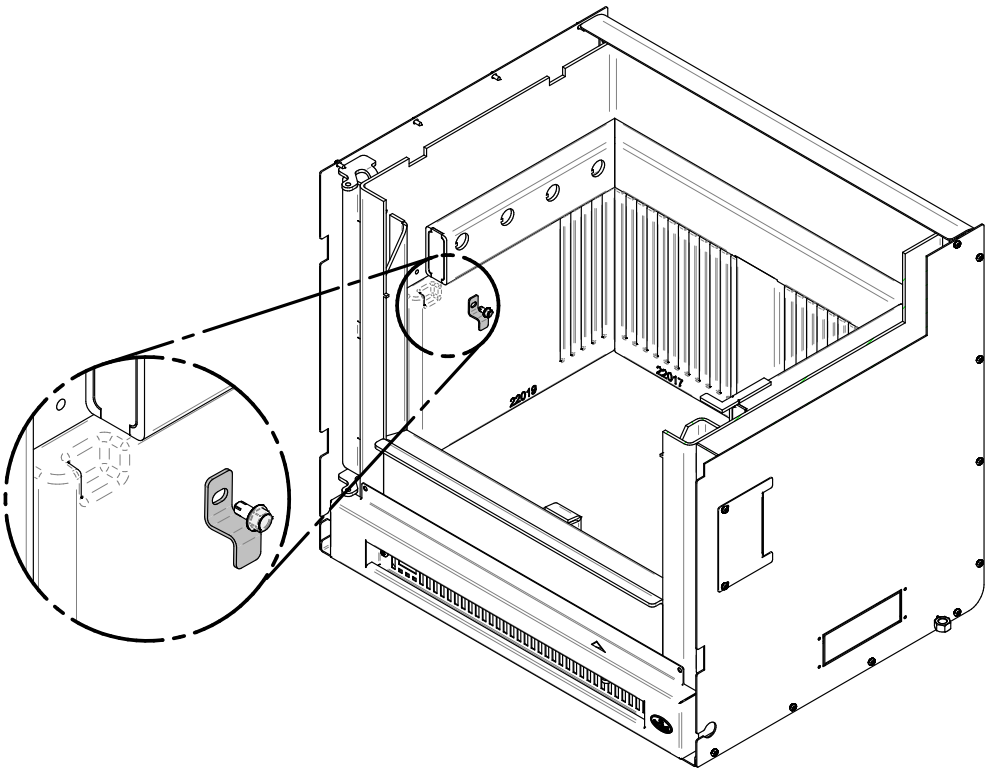

8. Install the floor refractory slabs.

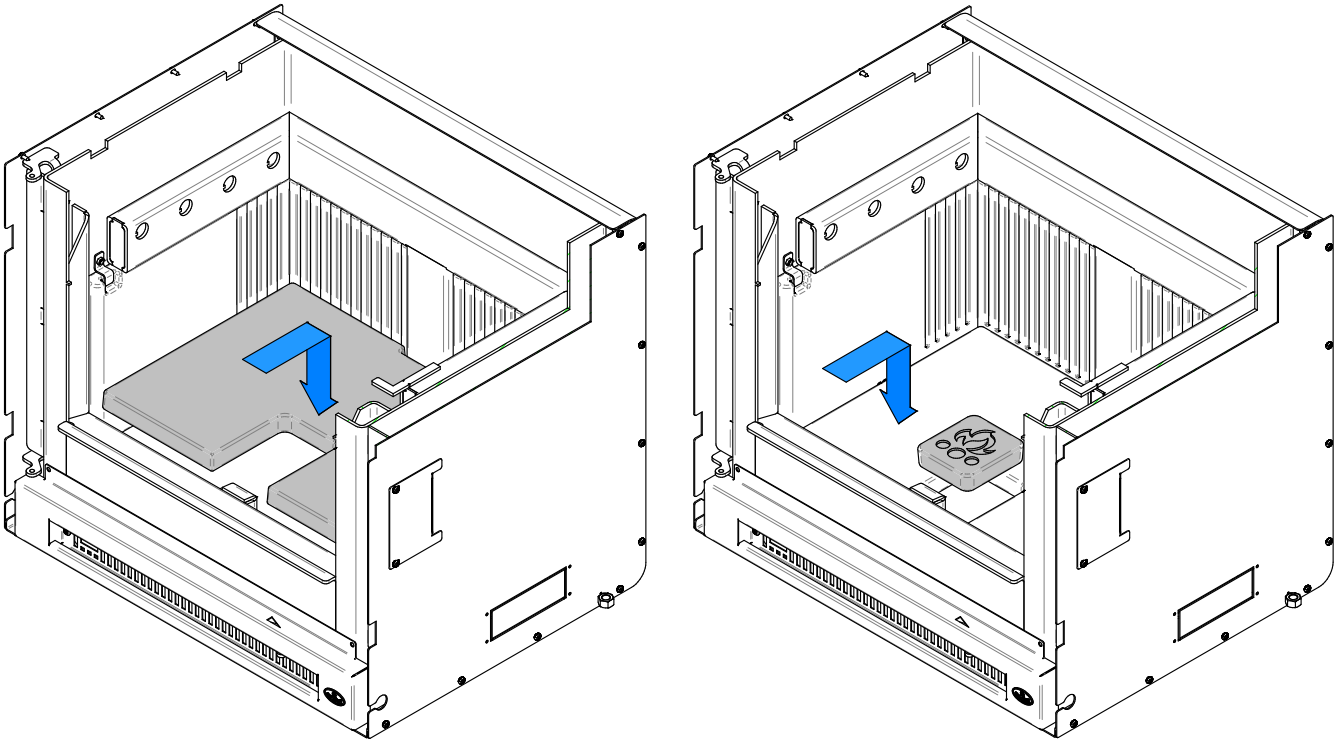

APPENDIX 7. REMOVAL INSTRUCTIONS

For inspecting purposes, the insert may need to be removed. To remove the insert, follow these instructions:

1. Remove the faceplate assembly **(C)** following the faceplate installation instructions.
2. Remove the screws that secure the flue liner to the fixation brackets **(A)**.
3. Unscrew the levelling bolts **(B)** located on each side of the wood insert.
4. Pull-out the wood insert from the fireplace opening to perform the maintenance work.

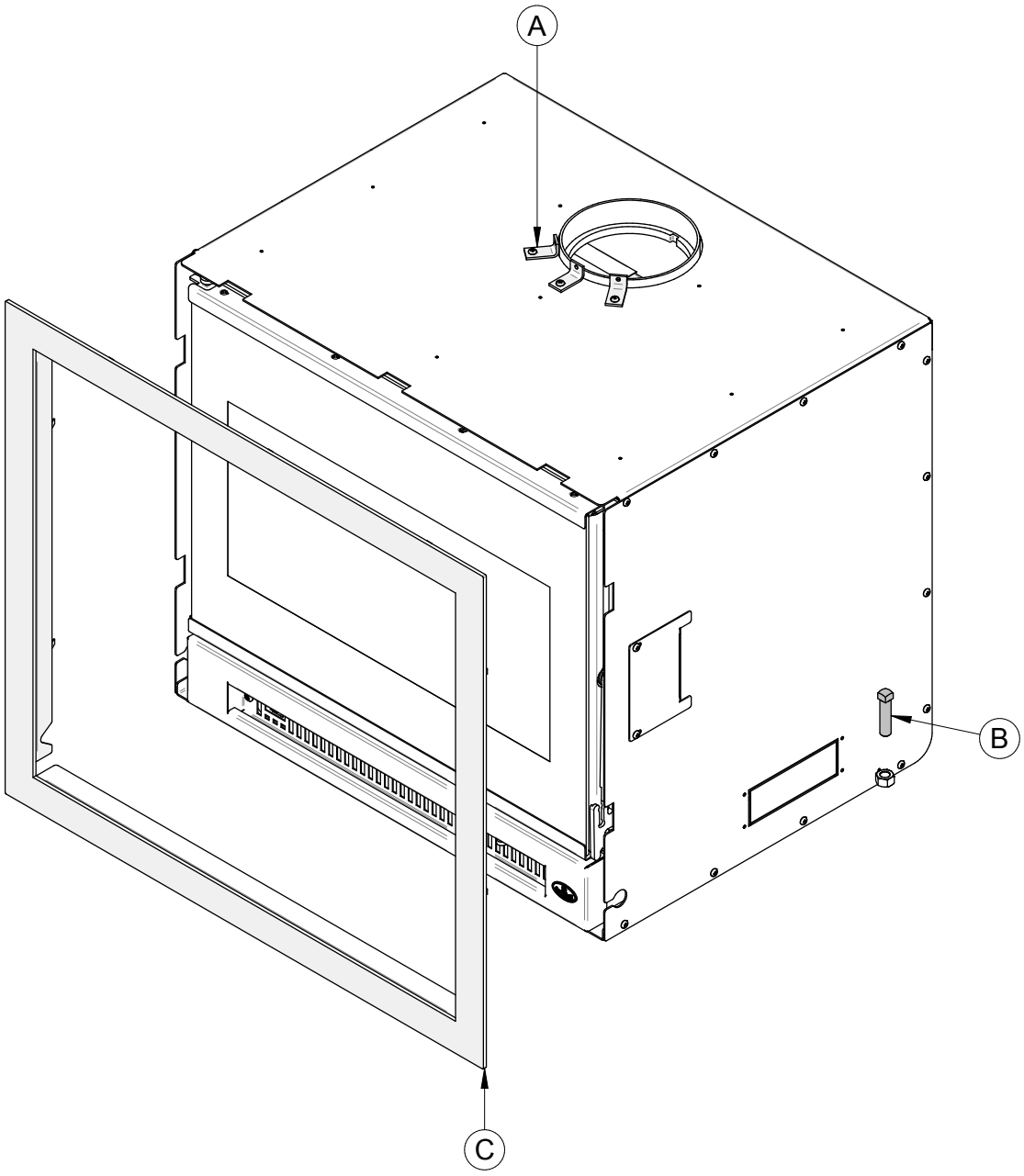

APPENDIX 8. EXPLODED DIAGRAM AND PARTS LIST

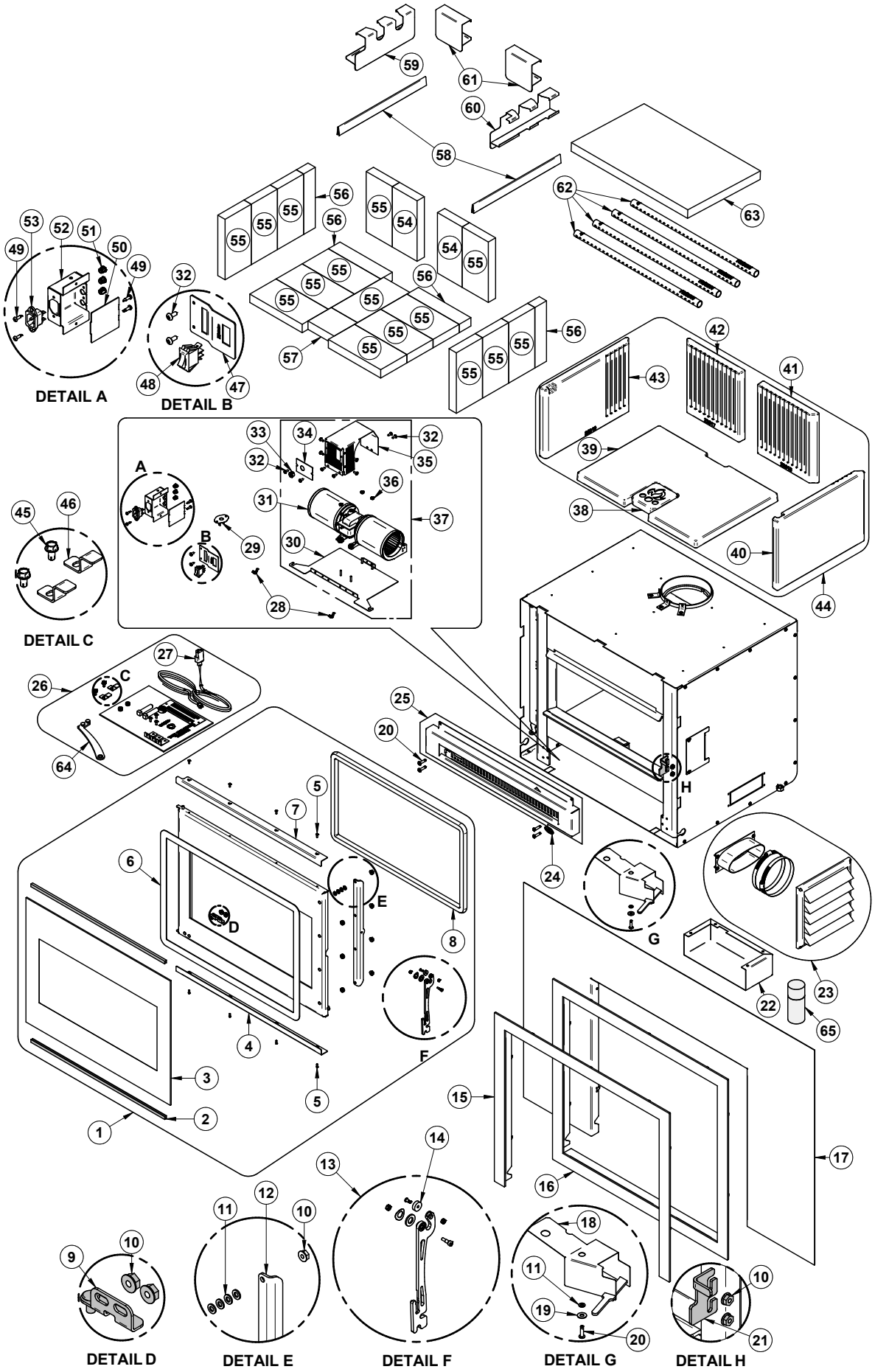

IMPORTANT: THIS IS DATED INFORMATION. When requesting service or replacement parts for this unit, please provide the model number and the serial number. We reserve the right to change parts due to technology upgrades or availability. Contact an authorized dealer to obtain any of these parts. Never use substitute materials. Use of non-approved parts can result in poor performance and safety hazards.

#	Item	Description	Qty
1	SE65891	DOOR ASSEMBLY	1
2	AC06400	3/4" (FLAT) X 6' BLACK SELF-ADHESIVE GLASS GASKET	1
3	23073	GLASS - 24 13/16"W X 18 1/2"H	1
4	PL65893	GLASS RETAINER	1
5	30021	SELF TAPPING SCREW 8-32 "F" TYPE X 7/16" FLAT HEAD PHILLIPS BLACK	8
6	AC06810	SELF ADHESIVE BLACK GASKET KIT 1/8" X 3/8" X 6'	1
7	PL65892	GLASS RETAINER	1
8	AC06951	SILICONE AND 5/8" X 9' BLACK GASKET KIT	1
9	SE65896	ADJUSTABLE HINGE ASSEMBLY	1
10	30220	FLANGED LOCKNUT 1/4-20	5
11	30187	STAINLESS WASHER ID 17/64" X OD 1/2"	16
12	PL65895	HANDLE SUPPORT	1
13	SE65897	REPLACEMENT INSPIRE HANDLE KIT	1
14	SE65246	INSPIRE BEARING HANDLE KIT	1
15	AC01020	NARROW FACEPLATE (U SHAPE)	1
16	AC01022	NARROW FACEPLATE	1
17	AC01021	32'' X 50'' CUTTABLE FACEPLATE (16 GA)	1
18	SE65962	AIR CONTROL DAMPER ASSEMBLY	1
19	30206	ZINC WASHER 5/16"ID X 3/4"OD	1
20	30506	SCREW PAN TORX TYPE F 1/4-20 X 1" BLACK	5
21	PL65853	DOOR LOCKING PLATE	1
22	PL65938	AIR INTAKE CASING	1
23	AC01298	5"Ø FRESH AIR INTAKE KIT OVAL	1
24	30977	OSBURN STICKER	1
25	SE65915	BOTTOM FACEPLATE ASSEMBLY	1
26	SE45952	INSPIRE INSERT INSTRUCTION MANUAL KIT	1
27	60331	POWER CORD 6'	1
28	30484	WING NUT 1/4-20	2
29	44028	CERAMIC THERMODISC F110-20F	1
30	PL65913	BLOWER MOUNTING PLATE	1
31	44207	DOUBLE CAGE BLOWER 176 CFM (CLASS H)	1
32	30131	BLACK METAL SCREW #10 X 1/2" TYPE "A" PAN QUADREX	2
33	30413	SNAP BUSHING	1
34	PL65851	ACCESS PANEL	1
35	PL65914	BLOWER HOOD	1

#	Item	Description	Qty
36	30221	LOCK NUT HEX #8-32 NYLON	2
37	SE65914	BLOWER ASSEMBLY	1
38	22022	MOULDED LOGO/PLUG STONE	1
39	22021	MOULDED BOTTOM STONE	1
40	22020	MOULDED RIGHT STONE	1
41	22018	MOULDED RIGHT BACK STONE	1
42	22017	MOULDED LEFT BACK STONE	1
43	22019	MOULDED LEFT STONE	1
44	AC01237	MOULDED REFRACTORY PANEL KIT FOR MINIMALIST BASE AND INSERT	1
45	30060	THREAD-CUTTING SCREW 1/4-20 X 1/2" F HEX STEEL SLOT WASHER C102 ZINC	2
46	PL65937	STONE RETAINER	2
47	PL65852	ROCKER SWITCH BRACKET	1
48	44092	3 POSITION ROCKER SWITCH	1
49	30155	METAL SCREW #8 X 5/8'' PHILLIPS SELFTAPPING TEK ZINC	4
50	PL65909	JUNCTION BOX COVER	1
51	30090	BLACK NYLON OPEN/CLOSED BUSHING	3
52	PL65901	JUNCTION BOX	1
53	60196	POWER CORD RECEPTACLE	1
54	PL36636	REFRACTORY BRICK 4 1/4" X 9'' X 1 1/4'' HD	2
55	29020	4 1/2'' X 9'' X 1 1/4'' REFRACTORY BRICK HD	15
56	PL36056	2" X 9" 1 1/4" REFRACTORY BRICK	4
57	PL36084	4" X 4 1/2'' X 1 1/4'' REFRACTORY BRICK	1
58	PL30583	FLOORED BRICK RETAINER	2
59	PL65115	LEFT BRICK RETAINER	1
60	PL65116	RIGHT BRICK RETAINER	1
61	PL65117	REAR BRICK RETAINER	2
62	PL65514	SECONDARY AIR TUBE	4
63	21389	C-CAST BAFFLE 20" X 12 1/2" X 1 1/4"	1
64	SE65968	COLD HAND	1
65	AC05963	METALLIC BLACK STOVE PAINT - 85 g (3oz) AEROSOL	1

OSBURN LIMITED LIFETIME WARRANTY

The warranty of the manufacturer extends only to the original retail purchaser and is not transferable. This warranty covers brand new products only, which have not been altered, modified nor repaired since shipment from factory. Proof of purchase (dated bill of sale), model name and serial number must be supplied when making any warranty claim to your OSBURN dealer.

This warranty applies to normal residential use only. This warranty is void if the unit is used to burn material other than cordwood (for which the unit is not certified by EPA) and void if not operated according to the owner's manual. Damages caused by misuse, abuse, improper installation, lack of maintenance, over firing, negligence or accident during transportation, power failures, downdrafts, venting problems or under-estimated heating area are not covered by this warranty. The recommended heated area for a given appliance is defined by the manufacturer as its capacity to maintain a minimum acceptable temperature in the designated area in case of a power failure.

This warranty does not cover any scratch, corrosion, distortion, or discoloration. Any defect or damage caused by the use of unauthorized or other than original parts voids this warranty. An authorized qualified technician must perform the installation in accordance with the instructions supplied with this product and all local and national building codes. Any service call related to an improper installation is not covered by this warranty.

The manufacturer may require that defective products be returned or that digital pictures be provided to support the claim. Returned products are to be shipped prepaid to the manufacturer for investigation. Transportation fees to ship the product back to the purchaser will be paid by the manufacturer. Repair work covered by the warranty, executed at the purchaser's domicile by an authorized qualified technician requires the prior approval of the manufacturer. All parts and labour costs covered by this warranty are limited according to the table below.

The manufacturer, at its discretion, may decide to repair or replace any part or unit after inspection and investigation of the defect. The manufacturer may, at its discretion, fully discharge all obligations with respect to this warranty by refunding the wholesale price of any warranted but defective parts. The manufacturer shall, in no event, be responsible for any uncommon, indirect, consequential damages of any nature, which are in excess of the original purchase price of the product. A one-time replacement limit applies to all parts benefiting from lifetime coverage. This warranty applies to products purchased after June 1st, 2015.

DESCRIPTION	**WARRANTY APPLICATION***	
	PARTS	**LABOUR**
Combustion chamber (welds only) and cast iron door frame.	Lifetime	5 years
Ceramic glass**, plating (manufacturing defect**), and convector air-mate.	Lifetime	N/A
Surrounds, heat shields, ash drawer, steel legs, pedestal, trims (aluminum extrusions), C-Cast baffle**, vermiculite baffle**, secondary air tubes**, removable stainless steel combustion chamber, deflectors, and supports.	7 years	N/A
Handle assembly, glass retainers and air control mechanism.	5 years	3 years
Removable carbon steel combustion chamber components.	5 years	N/A
Standard and optional blower, heat sensors, switches, rheostat, wiring, and electronics.	2 years	1 year
Paint (peeling**), gaskets, insulation, ceramic fiber blankets, refractory bricks (fireplace only***), and other options.	1 year	N/A
All parts replaced under the warranty.	90 days	N/A

Subject to limitations above** ***Picture required** ****limited to one replacement

Labour cost and repair work to the account of the manufacturer are based on a predetermined rate schedule and must not exceed the wholesale price of the replacement part.

Shall your unit or a components be defective, contact immediately your **OSBURN** dealer. To accelerate processing of your warranty claim, make sure to have on hand the following information when calling:

- Your name, address and telephone number
- Bill of sale and dealer's name
- Installation configuration
- Serial number and model name as indicated on the nameplate fixed to the back of your unit
- Nature of the defect and any relevant information

Before shipping your unit or defective component to our plant, you must obtain an Authorization Number from your OSBURN dealer. Any merchandise shipped to our plant without authorization will be refused automatically and returned to sender.

This document is available for free download on the manufacturer's website. It is a copyrighted document. Resale is strictly prohibited. The manufacturer may update this document from time to time and cannot be responsible for problems, injuries, or damages arising out of the use of information contained in any document obtained from unauthorized sources.

Stove Builder International Inc.
250, rue de Copenhague,
St-Augustin-de-Desmaures (Québec) Canada
G3A 2H3
1-877-356-6663
https://www.osburn-mfg.com/en/
tech@sbi-international.com