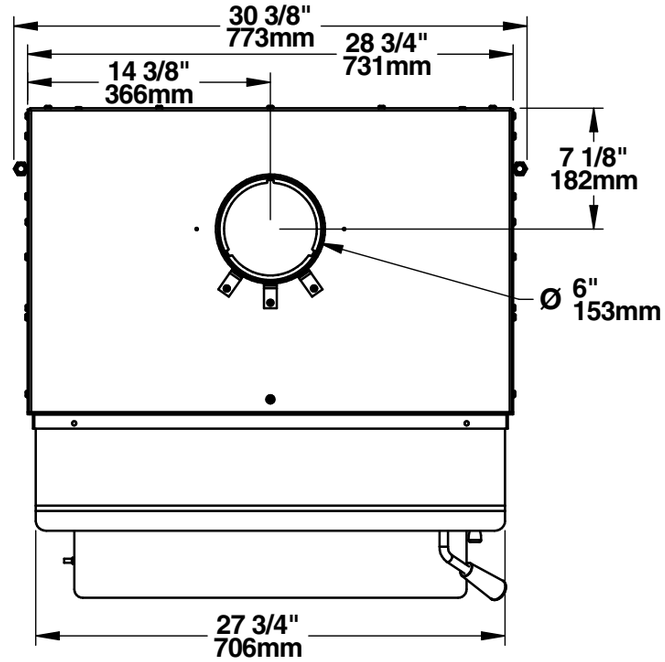

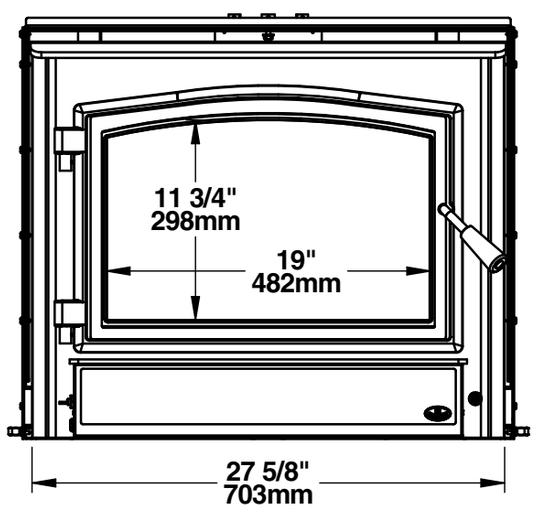

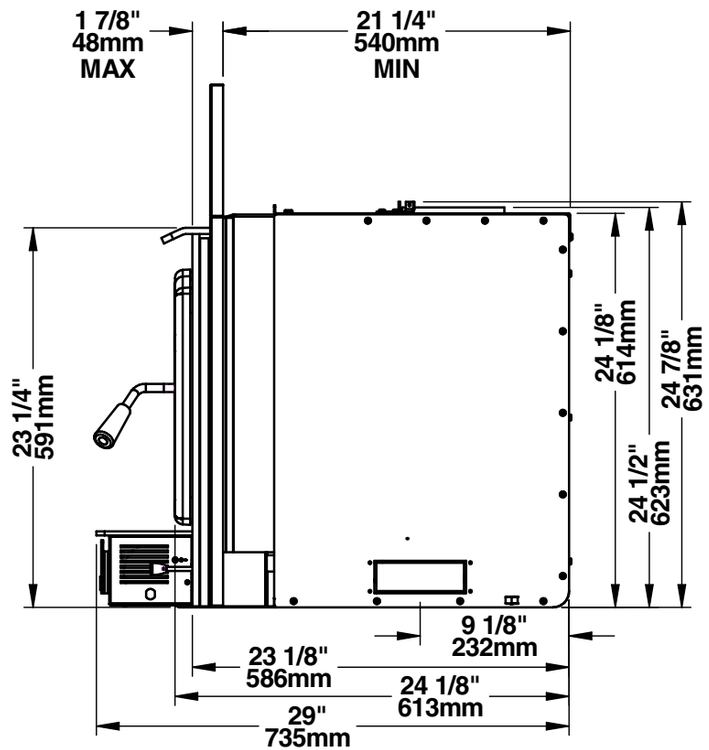

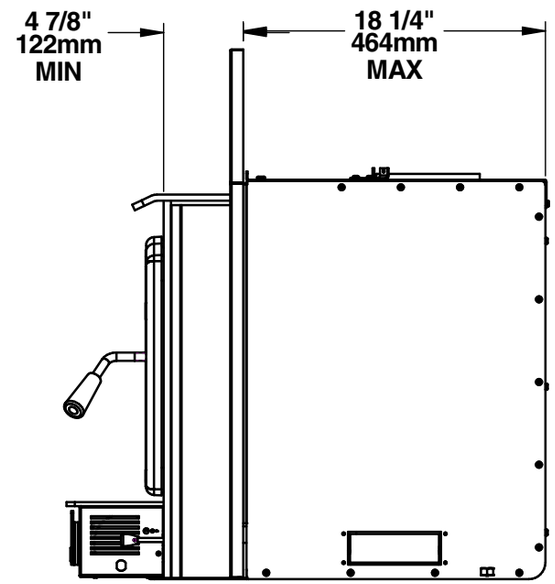

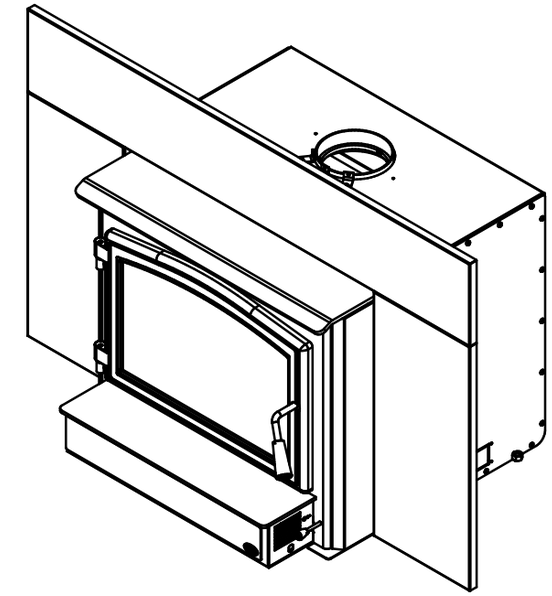

OSBURN 3.5-I (OB03510)

© 2020, FABRICANT DE POÊLE INTERNATIONAL INC. TOUS DROITS RESERVÉS / ALL RIGHTS RESERVED

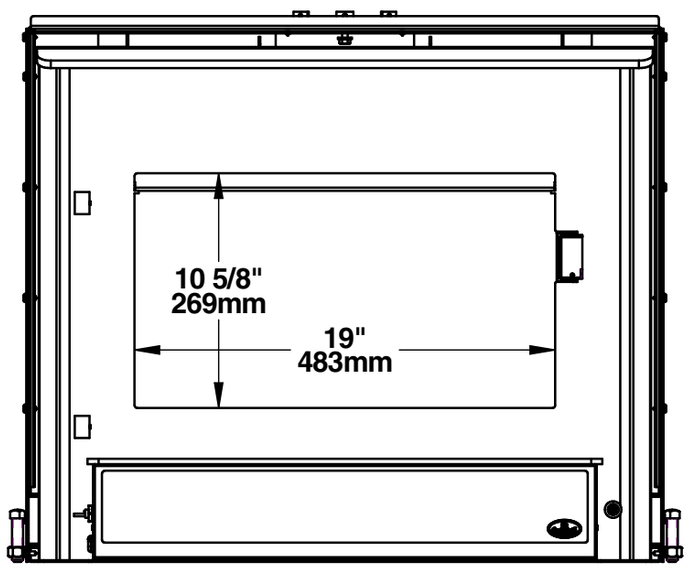

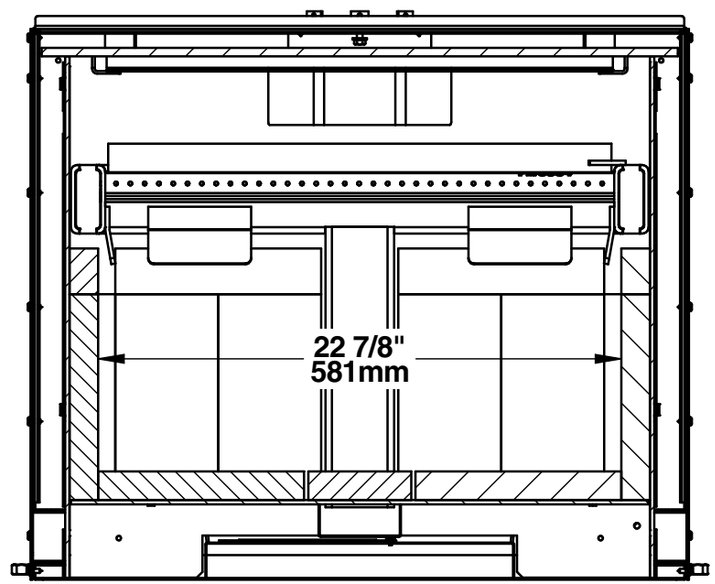

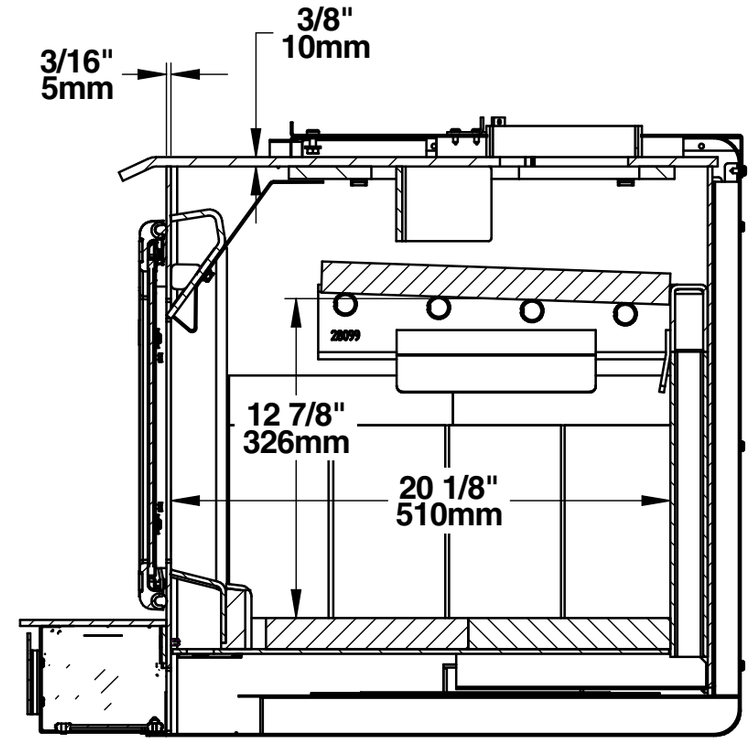

OSBURN 3.5-I (OB03510)

© 2020, FABRICANT DE POÊLE INTERNATIONAL INC. TOUS DROITS RESERVÉS / ALL RIGHTS RESERVED