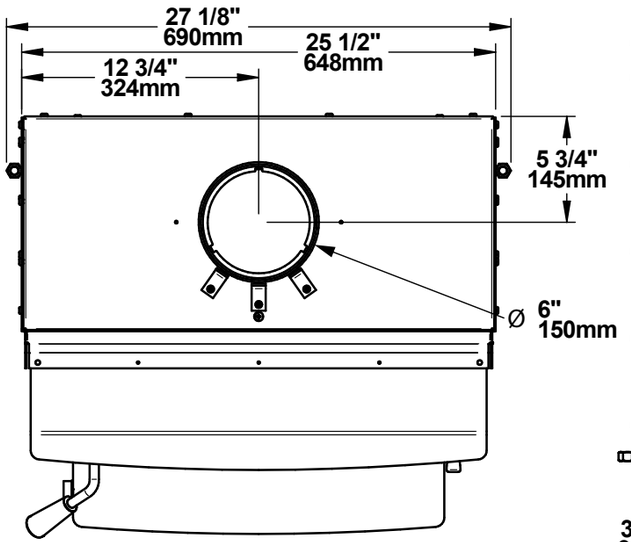

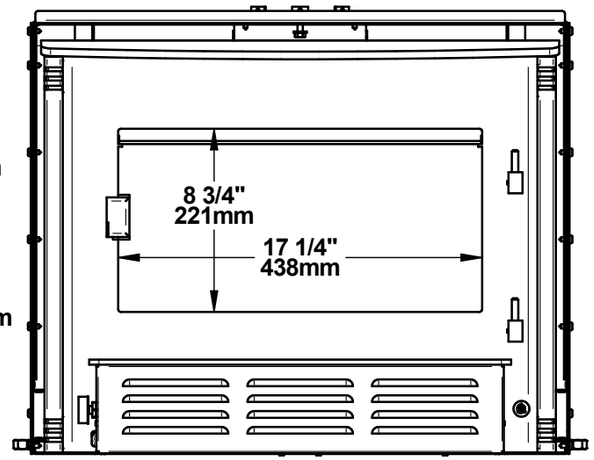

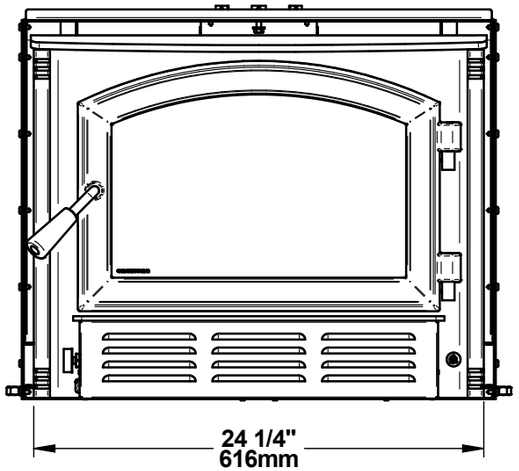

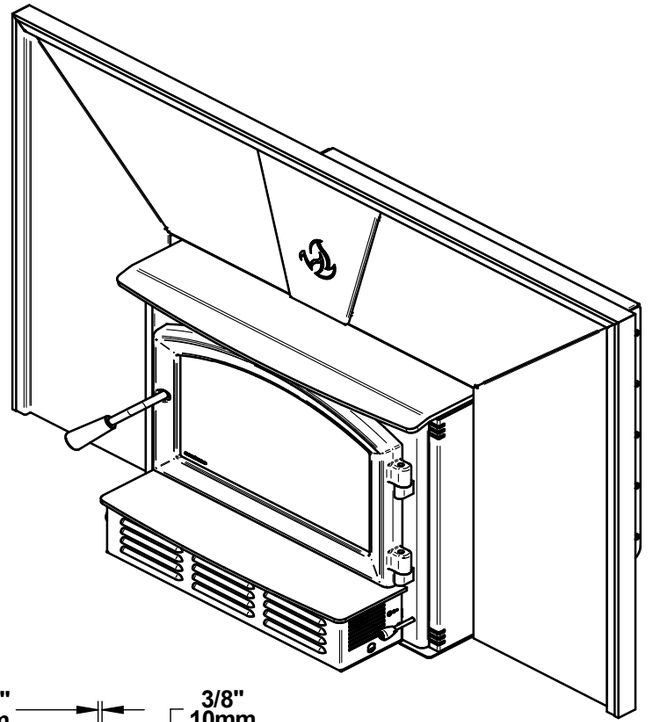

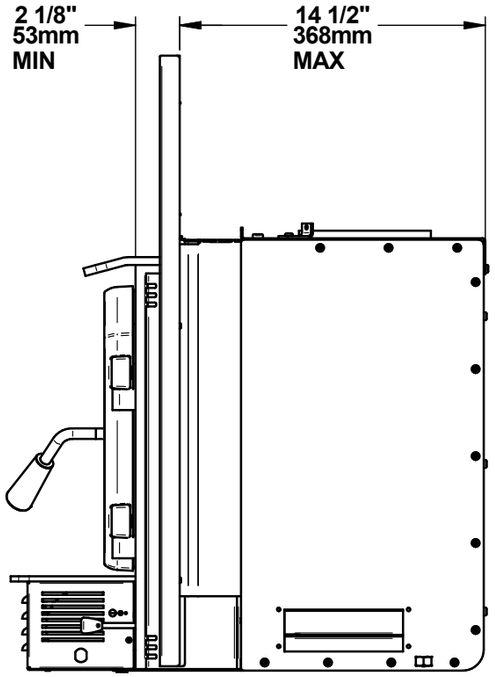

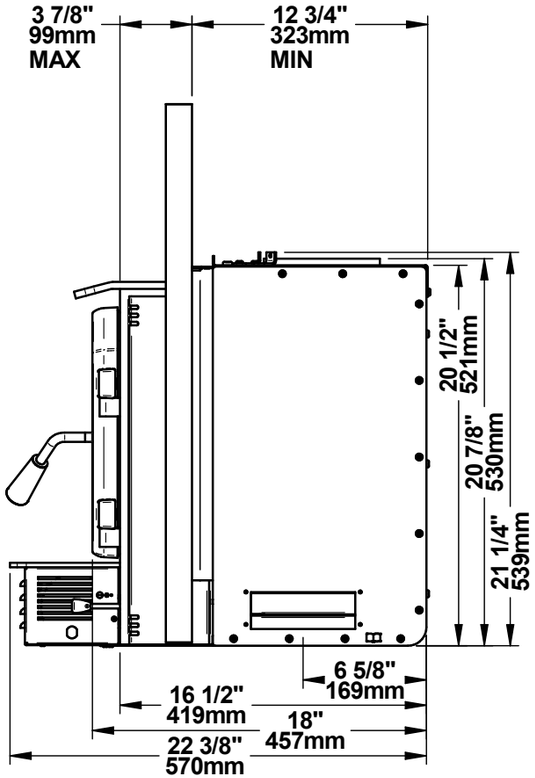

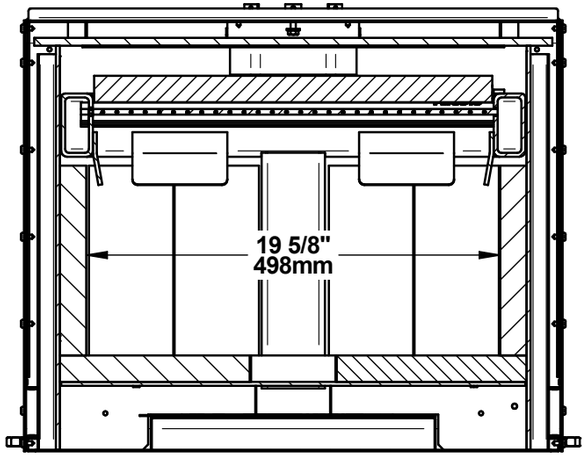

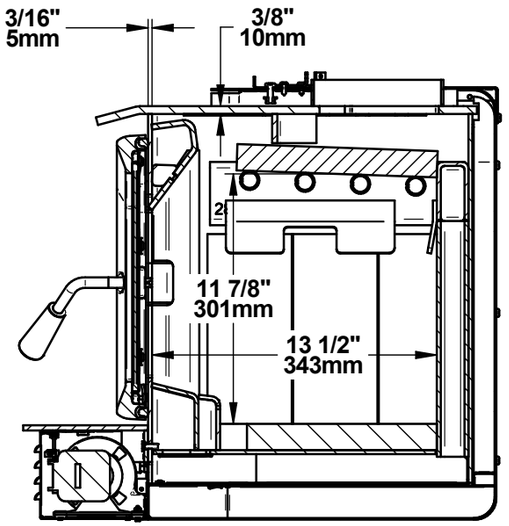

© 2019, FABRICANT DE POÊLE INTERNATIONAL INC. TOUS DROITS RESERVÉS / ALL RIGHTS RESERVED