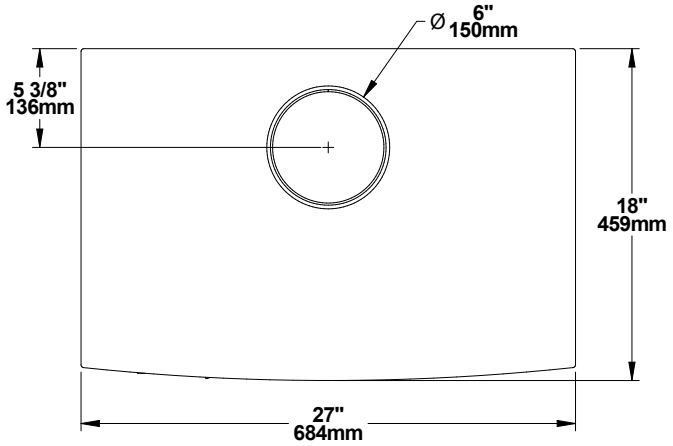
Ø 6"
150mm
5 3/8"
136mm
18"
459mm
27"
684mm

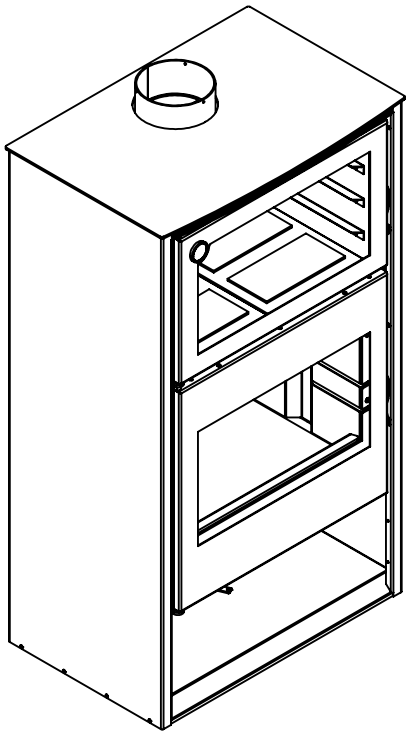

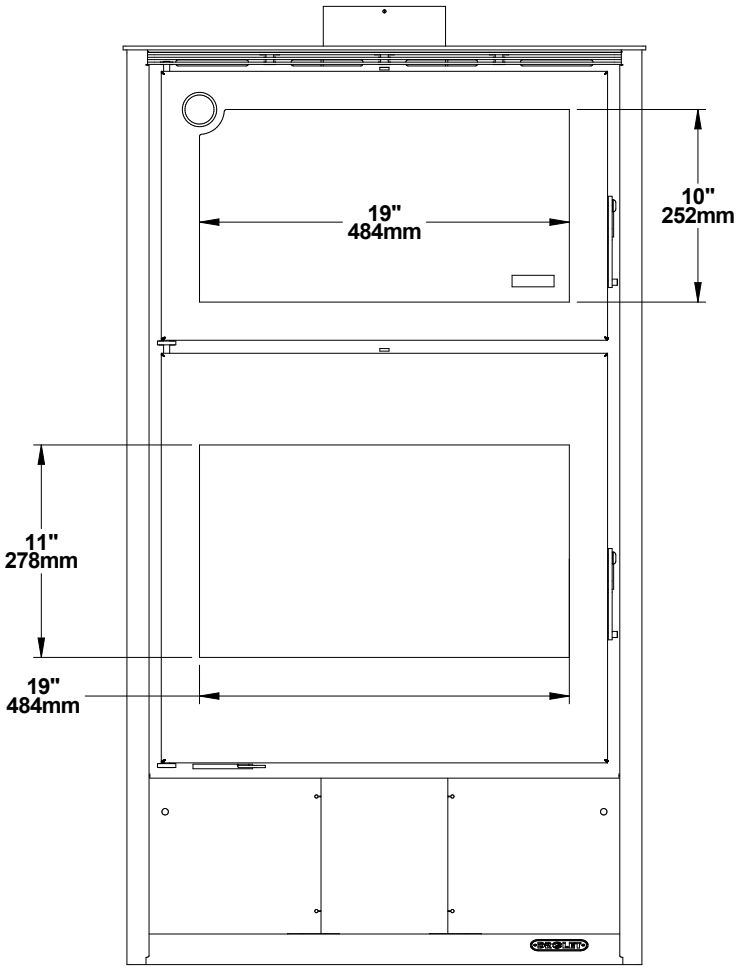
19"
484mm
10"
252mm
11"
278mm
19"
484mm

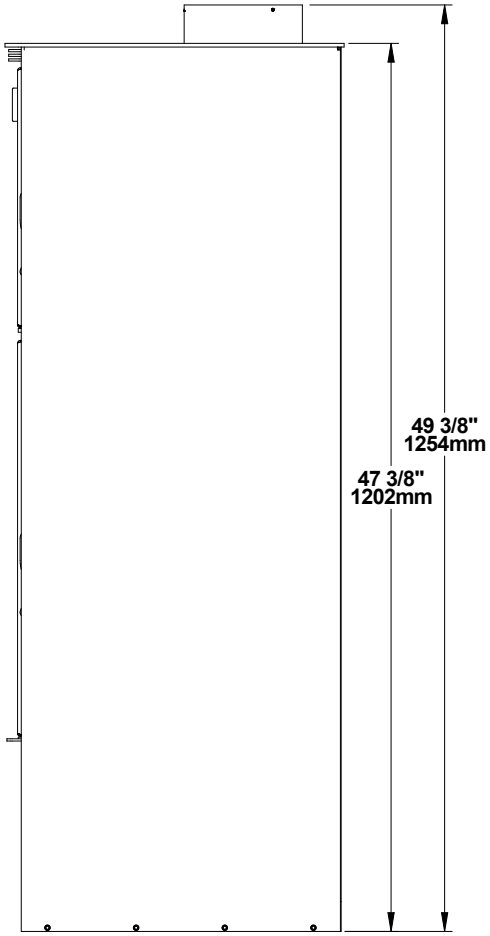
49 3/8"
1254mm
47 3/8"
1202mm