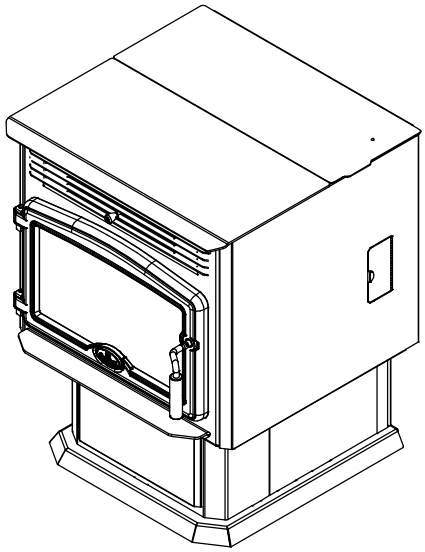

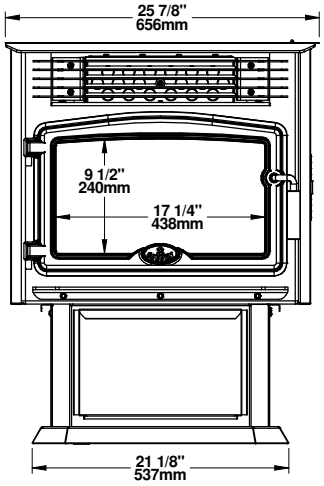
25 7/8"
656mm
9 1/2"
240mm
17 1/4"
438mm
21 1/8"
537mm

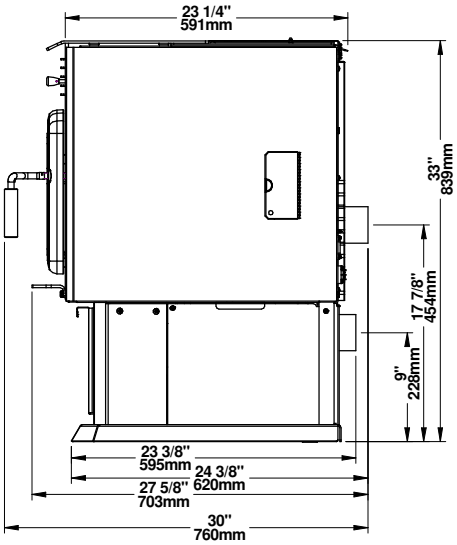
23 1/4"
591mm
33"
839mm
17 7/8"
454mm
9"
228mm
23 3/8"
595mm
24 3/8"
620mm
27 5/8"
703mm
30"
760mm

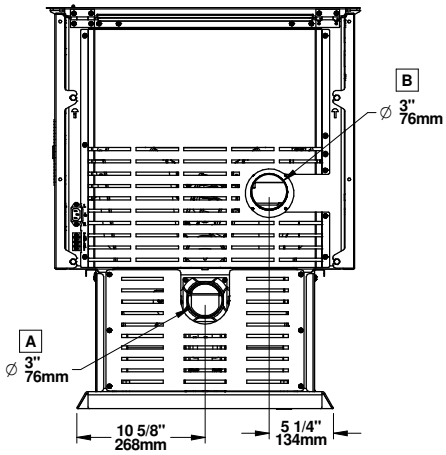
B
∅ 3"
76mm
A
∅ 3"
76mm
10 5/8"
268mm
5 1/4"
134mm