TEST REPORT

SCOPE: EMISSIONS, EFFICIENCY AND OUTPUT

FUEL: CORDWOOD

TEST STANDARD: EPA & CSA B415.1-10

MODEL: HEATPRO WOOD FURNACE

Intertek

Listing Report for Applicant
Issued: May 31 2017 12:36PM

Inspection Tests And Evaluation Of

SBI- Max Caddy, Heatpro Emission and Efficiency (38634)

RENDERED TO
Stove Builder International Inc.
250, rue de Copenhague
St-Augustin-de-Desmaures, QC G3A 2H3
Canada

GENERAL: This Report gives the results of the inspection, tests and evaluation of the above for compliance with applicable requirements of the following standards : CSA B415.1 (2010)

This report is for the exclusive use of Intertek's Client and is provided pursuant to the agreement between Intertek and its Client. Intertek's responsibility and liability are limited to the terms and conditions of the agreement. Intertek assumes no liability to any party, other than to the Client in accordance with the agreement, for any loss, expense or damage occasioned by the use of this report. Only the Client is authorized to permit copying or distribution of this report and then only in its entirety. Any use of the Intertek name or one of its marks for the sale or advertisement of the tested material, product or service must first be approved in writing by Intertek. The observations and test results in this report are relevant only to the sample tested. This report by itself does not imply that the material, product, or service is or has ever been under an Intertek certification program.

Correlation for Multiple Listees

Applicant/Basic Listee:

Stove Builder International Inc.
250, rue de Copenhague
St-Augustin-de-Desmaures, QC G3A 2H3
Canada

Applicant/Manufacturer(s):

Applicant/Manufacturer	Contact
Stove Builder International Inc. (Laguadeloupe)	Contact: Claude Pare Phone: 418-878-3040 ext 255 Fax: 418-878-3001 E-Mail: cpare@sbi-international.com

Parties Authorized to Apply Mark:

Company	Contact

PRODUCT DESCRIPTION

Product Covered:

SBI- Max Caddy, Heatpro Emission and Efficiency

Product Description:

Product Covered

Emission results are as follows:

Models:	Max Caddy/ heatpro Wood-fueled hot aired furnace
Overall Thermal Efficiency:	78.9% (HHV)
Overall Delivered Heat Efficiency:	64.6% (HHV)
CO Emission Rate:	2.086 g/min
PM Emission Rate:	0.324 g/MJ
PM Emission Rate:	0.752 Lb/MMBTU Output
Minimum Delivery Heat Output:	15,112 BTU/h
Maximum Delivery Heat Output:	51,203 BTU/h
Test Fuel :	Cordwood

Attribute	Value
Criteria	CSA B415.1 (2010)
CSI Code	10 30 00 Fireplaces and Stoves
Intertek Services	Certification
Listed or Inspected	LISTED
Listing Section	SOLID FUEL EMISSIONS AND EFFICIENCY
Report Number	3198245MTL-001; 101549667MTL-001
Spec ID	38634
Verification Testing	No

DRAWING INDEX

WHI16-21514304 Certificate of Conformity SBI - Max Caddy, Heatpro

WHI16-21514304 Certificate of Conformity SBI - Max Caddy, Heatpro

Intertek

Certificate of Conformity

Emissions – Forced Air Furnace

CSA B415.1

Certificate number: WHI16-21514304

Organization:

Company Name: Stove Builder International Inc.
Address: 250, rue de Copenhague
City, State: St-Augustin–de-Desmaures, Quebec
Zip Code:G3A 2H3
Country: Canada

This is a certificate of conformity to certify that the bearer has successfully completed the requirements of the above scheme which include the testing of products, the initial assessment, and are subject to continuing annual assessments of their compliance and testing of samples of products taken from production (as applicable to the scheme) and has been registered within the scheme for the products detailed.

Product: Model MAX Caddy and Heatpro wood furnace
Maximum Output: 51 203 Btu/hour
Minimum Output: 15 112 Btu/hour
Weighted PM Emission Rate :0.752 LB/MMBTU output
Weighted average CO Emission Rate: 2.086 g/min
Weighted Average Efficiency: (Overall thermal efficiency (HHV: 78.9%)
(Overall Delivered Heat Efficiency: 64.6%)
Test Fuel Type: Cordwood
Compliance: Certified to comply with 2016 particulate emissions standard.
Report Number: 3198245MTL-001

Certification body: Intertek Testing Services NA, Inc.
Initial registration: October 19, 2016
Date of expiry: March 16, 2020
Issue status: 3

Name	Signature	Date
Dustin Behling Certification Coordination Manager		18/May/2017

www.intertek.com

Registered address:
Intertek Testing Services NA, Inc. 545 E. Algonquin Rd. Arlington Heights, IL 60005 USA

The certificate and schedule are held in force by regular annual surveillance visits by Intertek Testing Services NA, Inc. and the reader or user should contact Intertek to validate its status. This certificate remains the property of Intertek Testing Services NA, Inc. and must be returned to them on demand. This Certificate is for the exclusive use of Intertek's Client and is provided pursuant to the Certification agreement between Intertek and its Client. Intertek's responsibility and liability are limited to the terms and conditions of the agreement. Intertek assumes no liability to any party, other than to the Client in accordance with the agreement, for any loss, expense or damage occasioned by the use of this certificate. Only the Client is authorized to permit copying or distribution of this certificate and then only in its entirety. Use of Intertek's Certification mark is restricted to the conditions laid out in the agreement. Any further use of the Intertek name for the sale or advertisement of the tested material, product or service must first be approved in writing by Intertek. Initial Factory Assessments and Follow up Services are for the purpose of assuring appropriate usage of the Certification mark in accordance with the agreement, they are not for the purposes of production quality control and do not relieve the Client of their obligations in this respect.

MANUFACTURING INFORMATION

The Max Caddy /Heatpro Solid Fuel Wood Furnace is constructed of carbon steel. The outer dimensions are 57-inches deep, 49-inches high, and 30-inches wide. The unit has a door located on the front with a viewing glass for loading the fuel. Proprietary drawings and manufacturing methods are on file at Intertek in Quebec, Canada.

See product drawings and component description in Appendix D of the report.

SIGNATURE PAGE

Reported By:

Claude Pelland, P.Eng.
Staff Engineer
Intertek Lachine

Reviewed By:

Brian Ziegler
Project Team Leader
Building Products Division

HeatPro label-1

Intertek

LISTED SOLID FUEL FIRED CENTRAL FURNACE

FOURNAISE CENTRALE À COMBUSTIBLE SOLIDE HOMOLOGUÉE

MODEL / MODÈLE : HEATPRO

Options :

STANDARDS / NORMES D'ESSAI:
Certified to/Certifié selon CAN-CSA B366.1
Conforms to/Conforme à UL 391
Conforms to/Conforme à CSA B-415.1-10
Conforms to/Conforme à ASTM E2515-2011
(JULY / JUI 2015)

FOR USE WITH WOOD ONLY — POUR UTILISATION AVEC BOIS SEULEMENT

CONTACT LOCAL BUILDING OFFICIALS ABOUT THE RESTRICTIONS AND INSTALLATION INSPECTION IN YOUR AREA.

COMMUNIQUER AVEC LES AUTORITÉS LOCALES DU BÂTIMENT ET DE LA PRÉVENTION DES INCENDIES AU SUJET DES RESTRICTIONS D'INSTALLATION DANS VOTRE SECTEUR.

FUEL / COMBUSTIBLE WOOD / BOIS
AC CURRENT ONLY / COURANT CA SEULEMENT

CAUTION : Use copper wire no.12 AWG suitable for 167°F.

ATTENTION : Employer des fils d'alimentation adéquats pour 75°C.

Serial Number / No. de Série: 0

INSTALL AND USE ONLY IN ACCORDANCE WITH SBI STOVE BUILDER INTERNATIONAL INSTALLATION AND OPERATION INSTRUCTIONS.

L'INSTALLATION ET L'OPERATION DOIT SE FAIRE SELON LES INSTRUCTIONS D'INSTALLATION ET D'UTILISATION DE SBI FABRICANT DE POÊLES INTERNATIONAL.

PREVENT HOUSE FIRES

- Type of chimney: chimney suitable for use with solid fuel.
- Use with wood only. Do not use other fuels.
- Load fuel carefully, or damage may results.
- Do not use chemicals or fluids to start the fire.
- The heat exchanger, flue pipe and chimney must be cleaned regularly to remove accumulated creosote and ash. Ensure that the heat exchanger, flue pipe and chimney are cleaned during the summer months. The appliance, flue pipe and chimney must be in good condition.
- Do not use this furnace without ducts.
- In the USA, the unit must be installed on a non-combustible floor pad extending at least 16 inches (410 mm) in front of the door opening and at least 8 inches (205 mm) on each side of the door opening. In Canada, the unit must be installed on a non-combustible floor pad extending at least 18 inches (460 mm) in front of the door opening and at least 8 inches (205 mm) at the back and on each side of the unit. The floor pad must have a thickness of at least 0.015" (0.38mm). Consult owner's manual for more details.
- May be connected to ductwork that is still connected to another furnace.

- Do not connect this unit to a chimney flue serving another appliance.

- Do not connect ductwork so that reverse flow is possible.
- Do not relocate or bypass any of the safety controls in the original furnace installation.
- Caution: Maintain combustion air to the unit, air starvation is dangerous.

- The furnace can be used during a power-loss. Remove air filter and let the damper stay in closed position. See owner's manual for optimum performance under those conditions.

- Do not attempt to light a fire when there is oil vapor present.
- See owner's manual for electrical diagram.
- For more information, refer to owner's manual.

PRÉVENEZ LES INCENDIES

- Type de cheminée: cheminée conçue pour utilisation avec combustible solide.
- Brûler du bois seulement. Ne pas utiliser d'autres combustibles.
- Charger avec soin pour éviter d'endommager la fournaise.
- N'utiliser aucun produit chimique ou liquide pour allumer le feu.
- Nettoyer l'échangeur de chaleur, le conduit de raccordement et la cheminée pour enlever la créosote et les cendres accumulées. S'assurer que l'échangeur de chaleur, le conduit de raccordement et la cheminée sont nettoyés à la fin de la saison hivernale. L'appareil, le conduit de raccordement et la cheminée doivent être en bon état.
- Ne pas utiliser cette fournaise sans conduit.
- Aux USA, l'appareil doit être installé sur une plaque incombustible qui excède le devant de l'ouverture de porte d'au moins 16 pouces (410 mm) ainsi que chaque côté de l'ouverture de porte d'au moins 8 pouces (205 mm). Au Canada, l'appareil doit être installé sur une plaque incombustible qui excède le devant de l'ouverture de porte d'au moins 18 pouces (460 mm) ainsi que l'arrière et chaque côté de l'appareil d'au moins 8 pouces (205 mm). La plaque incombustible doit posséder une épaisseur minimale de 0.015" (0.38 mm). Consultez le manuel d'instructions pour plus de détails.
- Peut-être raccordé à des conduits raccordés à un autre générateur d'air chaud.

- Ne pas brancher cette unité à une cheminée servant à un autre appareil.

- Ne pas raccorder aux conduits de ventilation de façon à permettre un debit inversé.
- Ne pas relocaliser ou contourner les contrôles de sécurité originaux de la fournaise.
- Attention: Assurer l'air de combustion adéquate à l'appareil, une privation d'air est dangereuse.

- Cette fournaise peut être utilisée lors d'une panne de courant. Le filtre à air doit être retiré et le registre d'entrée d'air doit être laissé fermé. Voir le manuel d'instructions pour des performances optimales dans ces conditions.

- Ne pas allumer lorsque des vapeurs d'huile sont presentes.
- Voir le manuel d'instructions pour les diagrammes electriques.
- Pour de plus amples renseignements, référez-vous au manuel d'instructions.

MINIMUM CLEARANCES TO COMBUSTIBLE MATERIALS

Ceiling from plenum:	
Ceiling from conduit:	5 in
Ceiling (past 1st 6 feet of ductwork) :	1 in
Back Wall :	12 in
Front Wall :	48 in
Right Side Wall :	8 in
Left Side Wall :	24 in
Floor :	0 in
Flue Pipe :	18 in

DÉGAGEMENTS MINIMUM AUX MATÉRIAUX COMBUSTIBLES

Plafond du bonnet:	
Plafond des conduits:	127 mm
Plafond (passé les 1ers 6 pieds) :	25 mm
Mur arrière :	305 mm
Mur avant :	1220 mm
Mur latéral droit :	203 mm
Mur latéral gauche :	610 mm
Plancher :	0 mm
Tuyau à fumée :	457 mm

Made in La Guadeloupe (Qc), Canada
10/04/2017 (# test)

SBI
Fabricant de poêles international
Stove Builder International

Fabriqué à La Guadeloupe (Qc), Canada
10/04/2017 (# test)

27654

HeatPro Label-2

Intertek

STANDARDS / NORMES D'ESSAI:
Certified to/Certifié selon CAN-CSA B366.1
Conforms to/Conforme à UL 391
Conforms to/Conforme à CSA B-415.1-10
Conforms to/Conforme à ASTM E2515-2011
(JULY / JUI 2015)

PERFORMANCE TESTING OF SOLID-FUEL BURNING HEATING APPLIANCE

RENDEMENT D'APPAREIL DE CHAUFFAGE À COMBUSTION SOLIDE

MODEL / MODÈLE :
HEATPRO

PERFORMANCE TECHNICAL DATA FROM CSA B-415.1-10 /
DONNÉES TECHNIQUES DE PERFORMANCE RELATIVE À LA NORME CSA B-415.1-10

- The stated efficiency is based on the higher heating value of the fuel.
- The minimum and maximum delivered heat output rate are based on the tests performed in determining the average emissions rates.
- The average efficiency is based on the amount of delivered heat.

- Le rendement annoncé est basé sur le pouvoir calorifique supérieur du combustible.
- Les puissances thermiques minimales et maximales sont basées sur les essais réalisés pour la détermination du taux moyen d'émission de particules.
- Le rendement moyen est basé sur la quantité de chaleur transportée.

AVERAGE PARTICULATE EMISSION RATE / TAUX MOYEN D'ÉMISSION DE PARTICULE:	0.753 lb/mmBTU 0.324 g/MJ	MINIMUM DELIVERED HEAT OUTPUT RATE / PUISSANCE THERMIQUE MINIMALE:	16 109 kJ/h
AVERAGE EFFICIENCY / RENDEMENT MOYEN:	64.8%	MAXIMUM DELIVERED HEAT OUTPUT RATE / PUISSANCE THERMIQUE MAXIMALE:	54 578 kJ/h
AVERAGE OVERALL EFFICIENCY / RENDEMENT MOYEN GLOBAL:	78.9%	MINIMUM OVERALL HEAT OUTPUT RATE / PUISSANCE THERMIQUE GLOBALE MINIMALE:	19 243 kJ/h
AVERAGE ELECTRICAL POWER CONSUMPTION / CONSOMATION D'ÉLECTRICITÉ MOYENNE:	0.36 kW/h	MAXIMUM OVERALL HEAT OUTPUT RATE / PUISSANCE THERMIQUE GLOBALE MAXIMALE:	67 069 kJ/h

U.S. ENVIRONMENTAL PROTECTION AGENCY Certified to comply with 2015 particulate emission standards. Not approved for sale after May 15, 2020./AGENCE DE PROTECTION DE L'ENVIRONNEMENT DES É.U. (EPA). Conforme aux normes d'émission de particules de 2015. Ne peut être vendu après le 15 mai 2020.

This wood heater needs periodic inspection and repair for proper operation. Consult the owner's manual for further information./Cet appareil requiert des inspections et réparations périodiques. Consulter le manuel de l'utilisateur pour plus d'information.

It is against US federal regulations to operate this wood heater in a manner inconsistent with the operating instructions in the owner's manual./Opérer cet appareil de chauffage de façon inconsistente par rapport au manuel de l'utilisateur consiste une violation de la loi fédérale (USA).

DANGER: Risk of fire or explosion
- Do not burn garbage, gasoline, drain oil or other flammable liquids.

WARNING: Risk of fire
- Do not operate with flue draft exceeding 0.06" W.C. (15Pa).
- Do not operate with fuel loading or ash removal doors open.
- Do not store fuel or other combustible material within marked installation clearances.
- Inspect and clean flues and chimney regularly.

CAUTION: Hot surfaces
- Keep children away.
- Do not touch during operation.

DANGER: Risque d'incendies ou d'explosion
- Ne pas brûler d'ordures, d'essence, d'huile moteur ou tout autre liquides inflammable.

AVERTISSEMENT: Risque d'incendies
- Ne pas utiliser si le tirage excède 0.06" C.E. (15Pa).
- Ne pas utiliser avec les portes d'accès et/ou de chargement ouverte.
- Ne pas entreposer de combustible ou matériaux combustibles à l'intérieur des dégagements prescrits.
- Inspecter et nettoyer le conduit de raccordement ainsi que la cheminée fréquemment.

TECHNICAL DATA
DONNÉES TECHNIQUES

Blower / Ventilateur	DD-10 1/3 HP
Max Output T°/ T° max Sortie	225 °F 107 °C
Ext. Static Pressure/ Pression Statique Ext.	0.2" W.C. 0.2" C.E.
Electrical Rating / Alimentation Electrique	120V, 3.6 AMPS, 60Hz

PROCEDURE TO FOLLOW IN CASE OF RUN-AWAY FIRE
1) Turn down thermostat
2) Keep fuel door closed
3) Close all combustion air controls

EN CAS D'INCENDIE DE CHEMINÉE
1) Baisser le thermostat
2) Maintenir la porte de chargement fermée
3) Fermer tous les dispositifs d'admission d'air

Made in La Guadeloupe (Qc), Canada
10/04/2017 (# test)

Fabriqué à La Guadeloupe (Qc), Canada
10/04/2017 (# test)

SBI
Fabricant de poêles international
Stove Builder International

27655

Max Caddy Owner's manual English

Caddy By PSG

Installation and operating instructions for the MAX CADDY WOOD FURNACE (PF01102 model)

Certified according to CSA B415.1-10, CSA B366.1, UL391, CSA C22.2 NO.236, UL 1995, CAN/CSA B140.4 and UL 727

FURNACE MODELS INCLUDED IN THIS MANUAL

WOOD ONLY

COMBINATION 20 kW / 25 kW AND OIL

Read these instructions carefully before installing and operating your furnace.

CONGRATULATIONS!

You have purchased one of the finest wood or combination furnaces available on the market. We are confident that your furnace will provide years of comfort and safe operation.

Please keep this document!

Verified and tested for Canada and the United States by an accredited laboratory.

This manual is available for free download on the manufacturer's web site. It is a copyrighted document. Re-sale is strictly prohibited. The manufacturer may update this manual from time to time and cannot be responsible for problems, injuries, or damages arising out of the use of information contained in any manual obtained from unauthorized sources.

Eco-energy at the hearth of your home

PSG
250, de Copenhague,
St-Augustin-de-Desmaures (Quebec)
CANADA G3A 2H3

Printed in Canada

45833A
07-06-2016

Max Caddy Owner's manual English (page 2 of 81)

TABLE OF CONTENT

1. INTRODUCTION 5
2. APPLIANCE PERFORMANCE(1) 6
3. GENERAL FEATURES 7
4. SPECIFICATIONS 8
5. MAX CADDY FURNACE TECHNICAL DATA 9
6. FURNACE DIMENSIONS 9
7. CHIMNEY AND DRAFT 11
8. SAFETY RULES 11
8.1. GENERAL REQUIREMENTS 11
8.2. ODOUR FROM THE PAINT 11
8.3. ASH DISPOSAL 11
8.4. CREOSOTE BUILD-UP AND REMOVAL 11
8.5. SMOKE DETECTOR 12
8.6. DOOR GLASS 12
8.6.1. GLASS SPECIFICATIONS 12
8.7. ASH DRAWER 12
8.8. ASH GRATE 12
MAX CADDY WOOD ONLY FURNACE, COMBINED WOOD / ELECTRIC OR PARALLEL ADD-ON PF01102 13
9. INSTALLATION INSTRUCTIONS 14
9.1. BLOWER INSTALLATION 14
9.2. LINK BOARD INSTALLATION AND CONNECTION 14
9.3. TOUCHSCREEN INSTALLATION AND CONNECTION 18
9.4. HOT AIR PLENUM TEMPERATURE PROBE INSTALLATION AND CONNECTION (RTD) 19
9.5. SERVOMOTOR INSTALLATION AND CONNECTION 20
9.6. UNIT LOCATION 21
9.7. MINIMUM CLEARANCES TO COMBUSTIBLE MATERIALS AND FLOOR PROTECTION 21
9.7.1. MINIMUM CLEARANCES TO COMBUSTIBLE MATERIALS 22
9.7.2. MINIMUM CLEARANCES TO COMBUSTIBLES MATERIALS FOR AIR RETURN DUCT 23
9.7.3. MINIMUM CLEARANCES TO COMBUSTIBLES MATERIALS FOR HOT AIR PLENUM 23
9.7.4. FLOOR PROTECTION 23
9.8. FLUE AND BAROMETRIC DRAFT CONTROL CONNECTION 24
9.9. ELECTRICAL CONNECTIONS 25
9.10. DAMPER 25
9.11. COMBUSTION AIR AND FRESH AIR INTAKE ADAPTER INSTALLATION (OPTIONAL) 25
9.12. HOT AIR PLENUM 26
9.13. PARALLEL INSTALLATION (US ONLY) 26
9.14. ELECTRICAL ELEMENT INSTALLATION (OPTIONAL) 29
9.14.1. INTRODUCTION 29
9.14.2. CONNECTING THE ELECTRICAL ELEMENT 30
10. THERMOSTAT INSTALLATION 31
10.1. WOOD FURNACE ONLY 31
10.1.1. COMBINATION WOOD-ELECTRIC OR WOOD-OIL FURNACE 31
10.1.2. COMBINATION WOOD-ELECTRIC-OIL 31
10.2. INSTALLATION OF AN AIR CONDITIONING UNIT 32
10.3. HEATPUMP INSTALLATION 32
10.4. INSTALLATION OF A DOMESTIC WATER PRE-HEATING SYSTEM OR A HUMIDIFIER 33
11. CONFIGURATION AND OPERATING INSTRUCTIONS 33
11.1. CONTROLS SYSTEM 33
11.2. SYSTEM CONFIGURATION 34
11.3. TOUCH SCREEN 34
11.3.1. ICONS DESCRIPTION 34
11.3.2. LANGUAGE SELECTION AND TEMPERATURE UNIT 35
11.4. ADDING AUXILIARY HEATING SOURCE AND SELECTION OF OPTIONS 35
11.4.1. TRANSITION TO AN AUXILIARY HEAT SOURCE 35
11.4.2. TRANSITION SETTINGS 35
11.4.3. AUXILIARY HEAT SOURCE PRIORITIZATION 36
11.4.4. EXTERNAL TEMPERATURE PROBE 36
11.4.4.1. “BI-ENERGY” FUNCTION 36
11.5. DISTRIBUTION BLOWER SPEED CONFIGURATION 37
11.5.1. DISTRIBUTION FAN SPEEDS 37
11.6. SYSTEM BALANCING 37
11.7. OPERATING INSTRUCTIONS 38

Max Caddy Owner's manual English (page 3 of 81)

11.7.1. HEAT MODE ... 38
11.7.2. COOL MODE ... 38
11.7.3. CIRC MODE (AIR CIRCULATION) ... 38
11.8. WOOD HEATING ... 39
11.8.1. LIGHTING ... 39
11.8.2. PREHEATING ... 39
11.8.3. HEATING ... 39
11.8.4. EARLY SIGNS OF AN OVERFIRED FURNACE: ... 39
11.8.5. WOOD AS HEATING FUEL ... 40
11.8.6. PROLONGED POWER FAILURE ... 40
11.8.7. CHIMNEY FIRES ... 40
11.8.8. LOCAL FIRE DEPARTMENT ... 40
12. MAINTENANCE ... 41
12.1. MAINTENANCE OF THE EXCHANGERS ... 41
12.2. CHIMNEY MAINTENANCE ... 42
12.3. SMOKE PIPE INSPECTION ... 42
12.4. BLOWER MOTOR MAINTENANCE ... 42
12.5. FILTERS ... 42
12.5.1. AIR FILTER DIMENSIONS ... 42
12.6. DOOR GASKET MAINTENANCE ... 42
12.6.1. DOOR ADJUSTMENT PROCEDURE ... 42
13. REPLACEMENT PARTS ... 43
13.1. DOOR GLASS ... 43
13.2. GASKET ... 43
14. TROUBLESHOOTING ... 43
14.1. VALIDATING STATUS OF A COMPONENT ... 44
14.1.1. DISTRIBUTION BLOWER ... 44
14.1.2. AIR DAMPER, HOT WATER AND HUMIDIFIER ... 44
14.1.3. TEMPERATURE PROBE (RTD) ... 45
14.2. MAIN ERROR CODES, POSSIBLE CAUSES AND SOLUTIONS ... 45
14.2.1. UNIT OVERHEAT ... 45
14.2.2. NO HEAT ... 46
14.2.3. COMMUNICATION ERROR ... 46
14.2.4. SMOKE SMELL ... 47
14.2.5. THE LCD TOUCH SCREEN DOES NOT LIGHTUP. ... 47
14.2.6. AUXILIARY OVERRIDE ... 47
15. GENERAL ELECTRICAL DIAGRAM ... 48
16. ELECTRICAL DIAGRAM FOR PARALLEL FURNACE ... 49
17. ELECTRICAL DIAGRAM FOR ELECTRIC UNIT ... 50
WOOD/OIL COMBINATION FURNACE ... 51
18. GENERAL NOTES ... 53
19. DRAFT AND CHIMNEY ... 53
20. OIL TANK AND PIPING ... 53
21. BURNER PUMP ... 53
22. APPLIANCE INSTALLATION ... 54
22.1. UNIT LOCATION ... 54
22.2. PARALLEL INSTALLATION ... 54
22.3. MINIMUM CLEARANCES TO COMBUSTIBLE MATERIALS ... 54
22.4. FLOOR PROTECTION ... 55
22.5. HOT AIR PLENUM ... 55
22.6. CONNECTING PIPE AND MANUAL DAMPER ... 55
22.7. DIFFERENT INSTALLATION ... 56
22.8. COMBUSTION AIR ... 57
22.9. ELECTRICAL WIRING ... 57
22.10. THERMOSTAT ... 57
23. OPERATION INSTRUCTION ... 57
23.1. FAN SPEED CONTROL ... 57
23.2. COMBUSTION SAFETY CONTROL ... 57
23.3. PRE-PURGE ... 57

Max Caddy Owner's manual English (page 4 of 81)

23.4. SAFE OPERATION **57**
23.5. TEMPORARY DISENGAGEMENT OF THE BURNER **58**
23.6. COMBUSTION ADJUSTMENT AND VERIFICATION **59**
23.6.1. COMBUSTION VERIFICATION PROCEDURE: 59
23.6.2. ELECTRODES SETTING 60
23.7. APPLIANCE START-UP **61**
23.8. PROLONGED CLOSING **61**
24. TECHNICAL DATA **61**
24.1. UH –MAX CADDY **61**
25. MAINTENANCE **61**
25.1. MAINTENANCE **61**
25.2. SERVICE **62**
25.3. FILTERS **62**
26. ELECTRICAL DIAGRAM BECKETT OIL UNIT **63**
27. ELECTRICAL DIAGRAM RIELLO OIL UNIT **64**
28. LINK BOARD OPTIONS CONNECTIONS **65**
28.1. ELECTRICAL CONSUMPTION **65**
28.2. OUTDOOR PROBE **65**
28.3. HOT WATER **65**
28.4. 24V ADDITIONNAL EQUIPMENT **66**
28.5. AIR CONDITIONNING DAMPER **66**
28.6. HUMIDIFIER **66**
28.7. HEAT PUMP **67**
29. EXPLODED VIEW AND PART LIST **67**
PSG LIMITED LIFETIME WARRANTY (REGULAR) **80**
PSG LIMITED LIFETIME WARRANTY (PRIVILEGE) **81**

Max Caddy Owner's manual English (page 5 of 81)

IMPORTANT NOTE:

THE INSTALLATION OF THIS CENTRAL HEATING SYSTEM MUST BE PERFORMED BY A QUALIFIED TECHNICIAN. PSG RESERVES ITSELF THE RIGHT TO VOID ITS WARRANTY OR DENY TECHNICAL ADVICE IF THE FURNACE HAS NOT BEEN SOLD OR INSTALLED BY A PROFESSIONAL.

REGISTER YOU WARRANTY ONLINE

To receive full warranty coverage, you will need to show evidence of the date you purchased your furnace. Keep your sales invoice. We also recommend that you register your warranty online at http://www.caddyfurnaces.com/en/warranty/warranty-registration
Registering your warranty online will help us track rapidly the information we need on your furnace.

WARNING : THE INSTALLATION OF THIS APPLIANCE REQUIRES THE ADDITION OF A BLOWER ASSEMBLY (PA08566) NOT INCLUDED.

1. INTRODUCTION

Take note that this furnace operates like an EPA wood burning stove. This applies to the lighting, the ember bed, and the minimum combustion air intake which was determined based on the use of good seasoned cordwood.

The Max Caddy furnace was tested and approved according to the CSA B415.1-10 Standard.

To optimize the efficiency of your furnace, here is some advice that you should follow when installing or operating your Max Caddy.

- Respect the local codes (when in doubt, consult your local dealer);
- Make sure your furnace is installed according to the instructions on the certification label;
- All controls and adjustments must be performed by a qualified technician. The blower speed must conform to the recommendations of local codes and should respect the static pressure ranges in the warm air plenum of the furnace.

We recommend that our wood burning hearth products be installed and serviced by professionals who are certified in the United States by NFI (National Fireplace Institute®) or in Canada by WETT (Wood Energy Technical Training) or in Quebec by APC (Association des Professionnels du Chauffage).

Max Caddy Owner's manual English (page 6 of 81)

2. APPLIANCE PERFORMANCE[1]

Fuel type	Dry cordwood	
Recommended heating area[*]	1,500 to 3,500 ft² (139 to 325 m²)	
Firebox volume	4.9 ft³ (0.139 m³)	
Maximum burn time[*]	17 h	
Maximum input capacity (dry cordwood)[2]	421,000 BTU	
Overall heat output rate (min. to max.)[3]	18,436 BTU/h to 66,620 BTU/h (5.6 kW to 19.6 kW)	
Nominal heat output at 15lb/ft³ fuel loading density	100,000 BTU/h	
Average overall efficiency[4]	78.9% (HHV)[5]	85 % (LHV)[6]
Delivered heat output rate (min. to max.)[7]	15,112 BTU/h to 51,203 BTU/h (4.7 kW to 16.0 kW)	
Average delivered efficiency[8]	64.6% (HHV)[5]	69.7 % (LHV)[6]
Optimum efficiency[9]	85.7 %	
Average particulate emissions rate[10][11]	0.752 lb/mmBTU (0.324 g/MJ)	
Average CO[12]	17.45 lb/mmBTU (7.51 g/MJ)	
Average electrical power consumption [13]	360 Wh	

[*] Recommended heating area and maximum burn time may vary subject to location in home, chimney draft, heat loss factors, climate, fuel type and other variables. The recommended heating area for a given appliance is defined by the manufacturer as its capacity to maintain a minimum acceptable temperature considering that the space configuration and the presence of heat distribution systems have a significant impact in making heat circulation optimum.

(1) Values are as measured per CSA B415.1-10, except for the recommended heating area, firebox volume, maximum burn time and maximum input capacity. Performances based on a fuel load prescribed by the standard at 10 lb/ft³ and with moisture content between 18% and 28%.

(2) Input value at 10lb/ft³ fuel loading density and dry energy value of 8,600BTU/lb.

(3) Overall: Radiated and delivered heat together at10lb/ft³ fuel loading density over one total burn cycle.

(4) Efficiency based on delivered heat when allowing cycling from high to low burn to simulate thermostat demand.

(5) Higher Heating Value of the fuel.

(6) Lower Heating Value of the fuel.

(7) Delivered: Remotely provided to other rooms through ducting at 10 lb/ft³ fuel loading density over one total burn cycle.

(8) Efficiency based on radiated and delivered heat when allowing cycling from high to low burn to simulate thermostat demand.

(9) Optimum overall efficiency at a specific burn rate (LHV).

(10) Based on delivered heat output.

(11) This appliance is officially tested and certified by an independent agency.

(12) Carbon Monoxyde. Based on overall heat output at 10lb/ft³ fuel loading density.

(13) Unless stated otherwise, measures were taken directly at the main power source and include all electrical components present in the appliance.

Max Caddy Owner's manual English (page 7 of 81)

3. GENERAL FEATURES

Maximum log length	25 in (635 mm) / north-south*
Diameter of the flue collar	6 in (152 mm)
Recommended connector pipe diameter	6 in (152 mm) if installed as wood only or combined wood-electric
Mandatory connector pipe diameter	7 in (178 mm) if installed as combined wood-oil
Recommended chimney diameter	6 in (152 mm) if installed as wood only or combined wood-electric
Mandatory chimney diameter	7 in (178 mm) if installed as combined wood-oil
Required type of chimney	CAN/ULC S629, UL 103 HT (2100 °F)
Baffle material	C-Cast
Add-on installation	US only
Alcove installation	Not approved
Mobile home installation‡	Not approved
Appliance weight (without option)	614 lb (279 kg)
Shipping weight (without option)	729 lb (331 kg)
Blower (wood or wood/electric options only)	1/2 HP, direct drive, 4 speeds, 2,100 CFM
Filter – dimensions (Width x Depth x Height) (included with optional blower assembly)	16 in x 20 in x 1 in (406 mm x 508 mm x 25 mm)
Filter – quantity	1
Particulate emission standard	EPA / CSA B415.1-10
USA standard (safety)	UL 391, UL 1995, UL 727
Canadian standard (safety)	CSA B366.1, CSA C22.2 no 236, CAN/CSA B140.4

*** East-west: through the door you see the longitudinal sides of the logs; north-south: through the door you see the tips of the logs.*

‡ *Mobile home (Canada) or manufactured home (USA): The US department of Housing and Urban Development describes "manufactured homes" better known as "mobile homes" as followed; buildings built on fixed wheels and those transported on temporary wheels/axles and set on a permanent foundation. In Canada, a mobile home is a dwelling for which the manufacture and assembly of each component is completed or substantially completed prior to being moved to a site for installation on a foundation and connection to service facilities and which conforms to the CAN/CSA-Z240 MH standard.*

Max Caddy Owner's manual English (page 8 of 81)

4. SPECIFICATIONS

Color	Grey
Thermostatic control	Yes
Door type	Single, glass with cast iron frame
Glass type	Ceramic glass
Air return plenum – dimensions (Depth or Height)	17 15/16 in
Air return plenum – dimension (Width)	19 15/16 in
Hot air plenum – dimensions (Depth or Height)	32 1/8 in
Hot air plenum – dimension (Width)	25 3/8 in
Ash pan – dimensions (Width x Depth x Height)	11 15/16 in x 19 5/8 in x 2 5/8 in
Clearance – front	48 in
Clearance – back wall	24 in from the blower housing recommended service clearance
Clearance – side wall	6 in without options installed
Clearance – opposite side wall	24 in recommended service clearance
Clearances – ducts	6 in for the first 6 feet with heat shield and 1 in after
Clearance – recommended for maintenance on option side	24 in
Burner – efficiency	Beckett AFG : 85 % / Riello : 87%
Burner – standard	Beckett AFG
Burner – other brands approved	Riello
Burner – location	Left or right
Burner – recommended clearance for maintenance	24 in
Burner – mandatory connector pipe diameter (Wood-oil)	7 in
Burner – mandatory exhaust pipe diameter	5 in
Burner – location of exhaust pipe	Left or right
Burner – capacity at input #1 / #2 Beckett	91,000 BTU (27 kW) / 120,000 Btu (35 KW)
Burner – orifice at input #1 / #2 Beckett	0,65 gal/h* 70° W (2,46 l/h) for both inputs
Burner – pump pressure at input #1 / #2 Beckett	100 PSI / 175 PSI
Burner – capacity at input #1 / #2 Riello	91,000 BTU (27 kW) / 120,000 Btu (35 KW)
Burner – orifice at input #1 / #2 Riello	0.50 gal/h* 70° W (1.89 l/h) / 0.65 gal/h* 70° W (2.46 l/h)
Burner – pump pressure at input #1 / #2 Riello	150 PSI / 165 PSI
Electric element – location	Left or right
Electric element – clearance recommended for maintenance	24 in
Electric element – recommended (maximum output)	20 kW
Electric element – other optional (maximum output)	25 kW
Top cold air plenum option – material	Galvanized steel
Top cold air plenum option – dimensions (Width x Depth x Height)	20 in x 18 in x 17 1/4 in
Top cold air plenum option – smoke pipe diameter	6 in
Fresh air intake adapter option	5 in
Fresh air intake adapter – connection location	Left or right
Fresh air intake adapter – connecting pipe diameter	6 in
Tested and listed as per applicable standards	By an accredited laboratory (CAN/USA)
Warranty	Limited lifetime

* US Gallon (1 US Gallon = 0,83 Imperial Gallon)

Max Caddy Owner's manual English (page 9 of 81)

5. MAX CADDY FURNACE TECHNICAL DATA

MODEL	(DIRECT DRIVE)			THEORETICAL DEBIT	TEMP VAR.	STATIC PRESSURE		FILTER
	VENT	MOT.	VIT.	(CFM)	(OF)	MIN.	MAX.	(1)
						INCH H2O		
MAX CADDY WITH BLOWER / MAX CADDY ADD-ON (PARALLEL)	G-10	1/2	4	2,100	100	0,2	0,5	16" x 20" x 1"

6. FURNACE DIMENSIONS

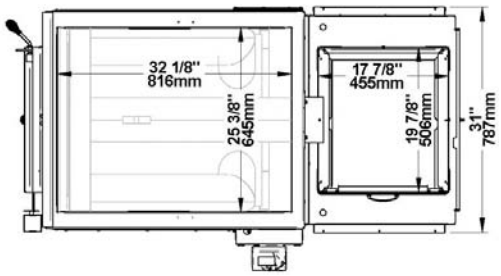

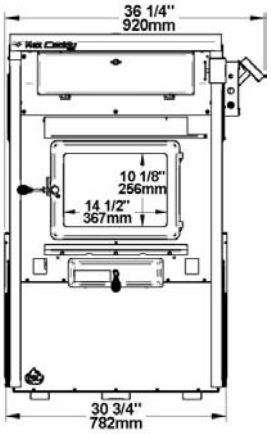

WOOD AND WOOD/ELECTRIC

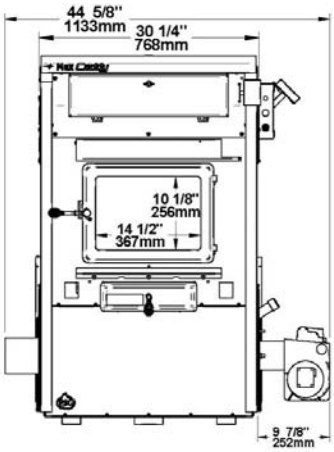

WOOD/OIL

Max Caddy Owner's manual English (page 10 of 81)

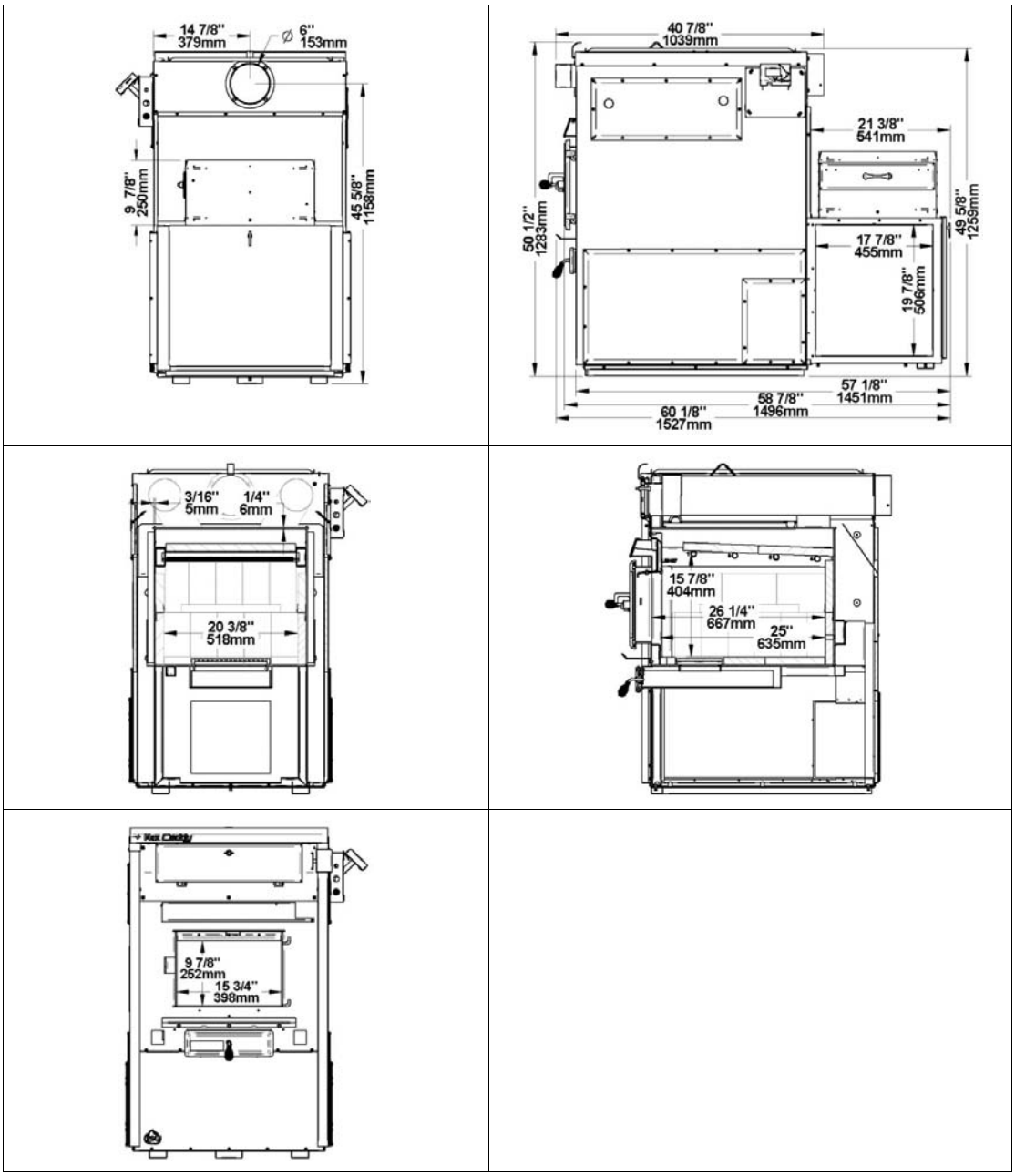

10

Max Caddy Owner's manual English (page 11 of 81)

7. CHIMNEY AND DRAFT

This furnace must be connected to a chimney certified for use with wood burning heating appliances. A 7-inch chimney and connector must be installed for the Max Caddy if it is used as a wood-oil unit, a wood-electrical-oil unit or if an oil option may be installed in the future. If the furnace is to be used as a wood only unit or a wood-electric, then a 6-inch chimney is recommended.

The unit is not to be connected to a chimney flue serving another appliance. If the chimney draft exceeds 0.06 IN.W.C., a barometric draft control should be installed on the smoke pipe. Never install a manual damper. The barometric control must be adjusted so that the maximum draft measured at the furnace outlet does not exceed -0.06 IN.W.C. Please note that a draft exceeding 0.06 IN.W.C. could produce an uncontrollable fire. **On the other hand, the minimum draft required is 0.04 IN.W.C. in the evacuation pipe on the wood side, no matter what type of furnace (WOOD, WOOD/ELECTRIC OR WOOD/OIL). The adjustment should in no case be modified to increase combustion.**

8. SAFETY RULES

WARNING:

THE INFORMATION GIVEN ON THE CERTIFICATION LABEL AFFIXED TO THE APPLIANCE ALWAYS OVERRIDES THE INFORMATION PUBLISHED, IN ANY OTHER MEDIA (OWNER'S MANUAL, CATALOGUES, FLYERS, MAGAZINES AND/OR WEB SITES).

8.1. GENERAL REQUIREMENTS

MAKE SURE THE CHIMNEY OUTLET AND THE PIPES ARE CLEAN AND IN GOOD CONDITION.

DO NOT USE CHEMICAL PRODUCTS OR LIQUIDS TO LIGHT THE FIRE.

DO NOT BURN WOOD COATED WITH PAINT, GLUE OR CHEMICAL PRODUCTS.

DO NOT BURN WASTES OR FLAMMABLE LIQUIDS SUCH AS GASOLINE, NAPHTHA, MOTOR OIL, OR OTHER UNSUITABLE MATTERS.

DO NOT STORE WOOD IN THE VICINITY OF THE FURNACE. RESPECT THE REQUIRED CLEARANCES BETWEEN COMBUSTIBLE MATERIALS AND THE SOURCE OF HEAT.

WARNING

THE ASH DRAWER AND EXCHANGERS ACCESS PANEL GET VERY HOT. DO NOT MANIPULATE WITH BARE HANDS.

8.2. ODOUR FROM THE PAINT

It is normal that smoke and odours emanate from the unit when you first light it. It is recommended to burn it at high rate and ventilate the building until the odours disappear. The smoke is not toxic. **This should be done before the ducts are connected to the furnace to prevent smoke dispersion in the house.**

8.3. ASH DISPOSAL

Ashes must be placed in a metal container with a tight fitting lid. The container should be stored outdoor, well away from combustible materials. This container should not contain any other type of waste. If the ashes are meant to be buried in soil, wait until all embers have thoroughly cooled before burying.

8.4. CREOSOTE BUILD-UP AND REMOVAL

When wood is burned slowly, it produces tar and other organic vapours which, when combined with moisture, form creosote. The creosote vapours condensate in a relatively cool chimney flue. As a result, creosote residues accumulate inside the flue lining and the exchangers.

N.B.: To minimize the frequency of the chimney cleaning, buy your firewood at least one year before using it. Store it in a dry place in order to obtain the minimum moisture rate and optimize the efficiency. Do not store wood or

Max Caddy Owner's manual English (page 12 of 81)

combustible materials within the installation minimum clearances or the space required to reload the appliance and remove ashes.

When ignited, creosote produces an extremely hot fire inside the chimney.

In the first year of use, inspect the chimney system at regular intervals to determine a cleaning cycle. Depending on the type of wood used and its quality, a semi-annual cleaning may be required. A yearly cleaning is mandatory. **If a significant layer of creosote has accumulated, it must be removed immediately to eliminate the risk of chimney fire.**

Remember that a small, hot fire is preferable to a large smouldering one to prevent creosote build-ups within the system. Prepare an emergency procedure in case of a chimney fire. **It is recommended to clean the heat exchangers thoroughly at the end of season in order to prevent corrosion.**

8.5. SMOKE DETECTOR

We highly recommend the use of a smoke detector. It must be installed at least 15 feet (4,57 m) from the appliance in order to prevent undue triggering of the detector when reloading.

8.6. DOOR GLASS

To maintain a clean and safe installation, do not build your fire too close to the glass or allow logs to lean on the glass.

Do not operate your furnace at too low a setting. Keep the air inlet opened long enough during the fire start-up to prevent the fire from smouldering, which could stain the glass.

An intense fire will help keep the glass clean. However, in the event that your glass gets stained, which should not occur under normal operating conditions, you will have to clean it using a wet cloth and a fireplace glass cleaner. Clean the glass **ONLY** when the unit has cooled down. Do not use abrasive cleanser.

WARNING: Avoid knocking or scratching the glass. It could crack or break.

8.6.1. GLASS SPECIFICATIONS

The glass is made of 3/16" (5mm) thick ceramic glass.

Do not operate your wood furnace with a broken glass, as this could seriously damage your furnace.

You can purchase a replacement glass from your PSG dealer.

8.7. ASH DRAWER

Your furnace is equipped with an ash drawer to collect ashes produced by the combustion of wood. This drawer must not be left open during combustion as this may cause over firing and serious damages to the furnace. Moreover, the additional air created could cause the dispersion of ashes in the ventilation system. **The drawer must be cleaned regularly. Use a vacuum cleaner to remove any ashes around the drawer in order to avoid the dispersion of ashes in the ventilation system.**

It is important that the door and the ash drawer be kept closed while the appliance is in use. Maintain all gaskets in good condition; in case of deterioration, contact your dealer for a genuine replacement gasket.

8.8. ASH GRATE

You must replace the ash grate if it is damaged and a replacement may be obtained from your dealer.

Max Caddy Owner's manual English (page 13 of 81)

INSTALLATION AND OPERATION INSTRUCTIONS FOR

MAX CADDY WOOD ONLY FURNACE, COMBINED WOOD / ELECTRIC OR PARALLEL ADD-ON (US ONLY) PF01102

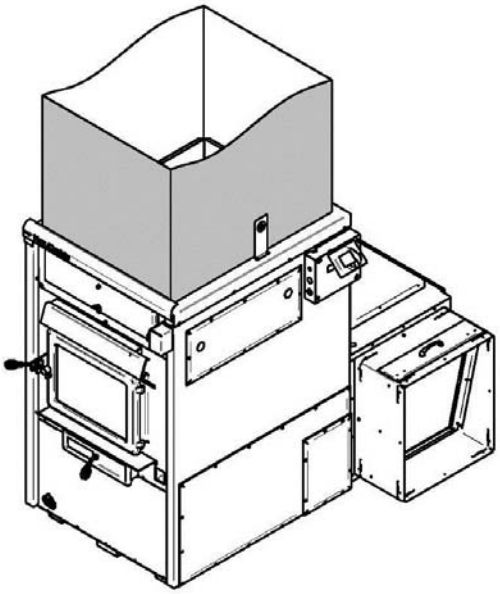

MAX CADDY FURNACE – WOOD ONLY

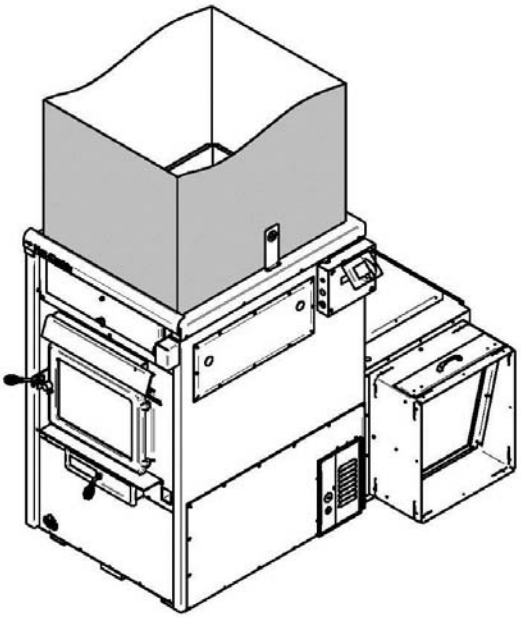

MAX CADDY FURNACE – COMBINED WOOD/ELECTRIC

Max Caddy Owner's manual English (page 14 of 81)

9. INSTALLATION INSTRUCTIONS

Installation must be made in accordance with the CSA B.365 « Installation code for solid-fuel-burning appliances and equipment » standard in Canada and NFPA 90B « Standard for the installation of warm air heating and air conditioning system » in the United States. Moreover, for all electrical connection, the Canadian standard CSA C22.1 « Canadian electrical code » and in the United-States NFPA 70 standard « National Electrical Code » must be followed.

All controls and adjustments must be performed by a qualified technician. The blower speed must conform to the recommendations of the Warm Air Heating and Air Conditioning National Association and should respect the static pressure ranges in the warm air plenum of the furnace

We recommend that our woodburning hearth products be installed and serviced by professionals who are certified in the United States by NFI (National Fireplace Institute®) or in Canada by WETT (Wood Energy Technical Training) or in Quebec by APC (Association des Professionnels du Chauffage).

Inspect the furnace to make sure that nothing has been damaged in the shipping. Pull out the wiring kit and the instructions manual from the firebox of the furnace and the accessories from the flue pipe.

The following section contains installation instructions for the Max Caddy wood only, Max Caddy wood / electric and Max Caddy add-on parallel configurations.

9.1. BLOWER INSTALLATION

To use the wood only configuration, the blower assembly (PA08566 – sold separately) is required. The installation instructions are provided with the blower.

9.2. LINK BOARD INSTALLATION AND CONNECTION

The following installation instructions are identical whether the furnace controls are located on the left or on the right of the furnace. The most accessible side is preferred to facilitate the connection of auxiliary heating sources or for servicing.

The components to be installed are in the combustion chamber of the furnace.

Remove the link board housing cover.

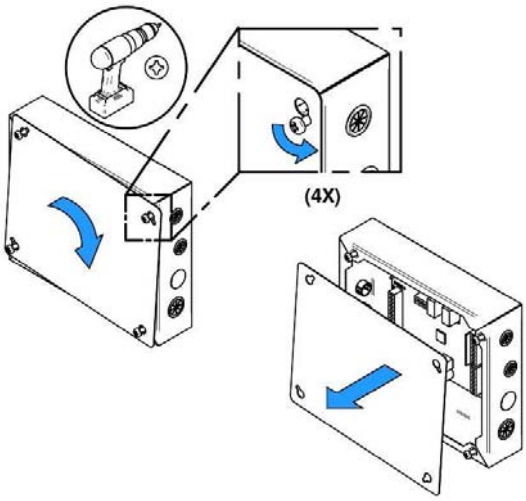

Max Caddy Owner's manual English (page 15 of 81)

Remove the four screws on the furnace, located on the side of the desired installation.

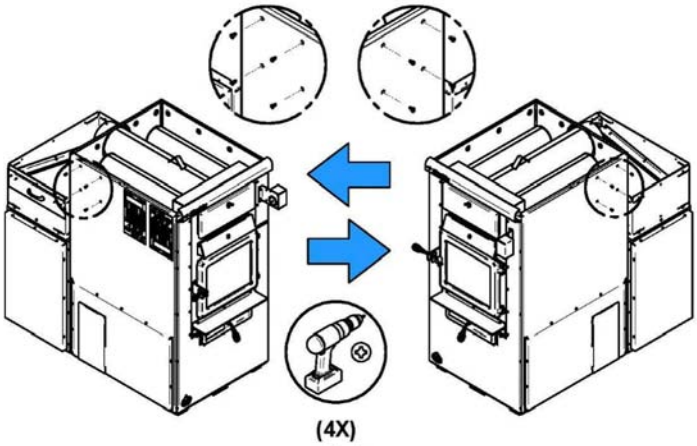

Align the holes of the board housing the holes on the side of the furnace. Use the screws removed in the previous step to secure the housing to the furnace.

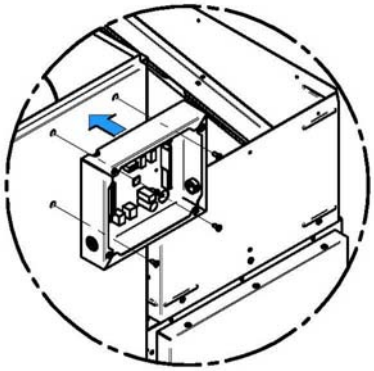

Once installed, the link board must be connected to the system with the telecommunication wire of the power board. The wire is located in the blower box. To access it, remove the air return box.

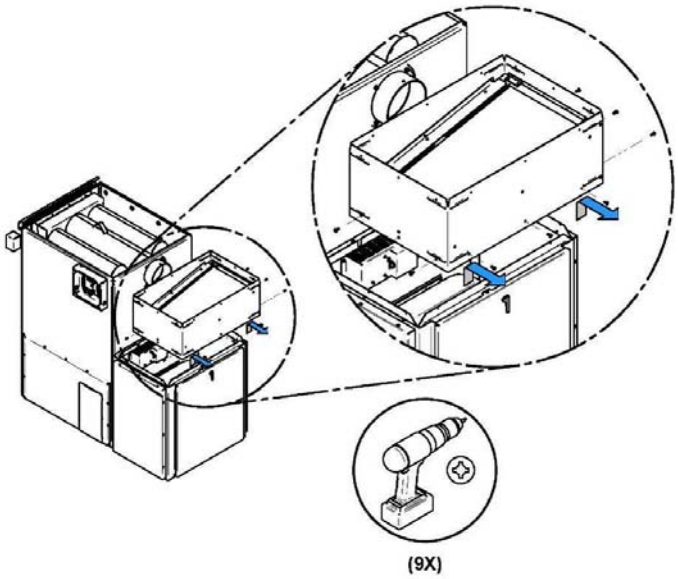

15

Max Caddy Owner's manual English (page 16 of 81)

Take the telecommunication wire and pull it through the grommet located on the side where the housing board is installed.

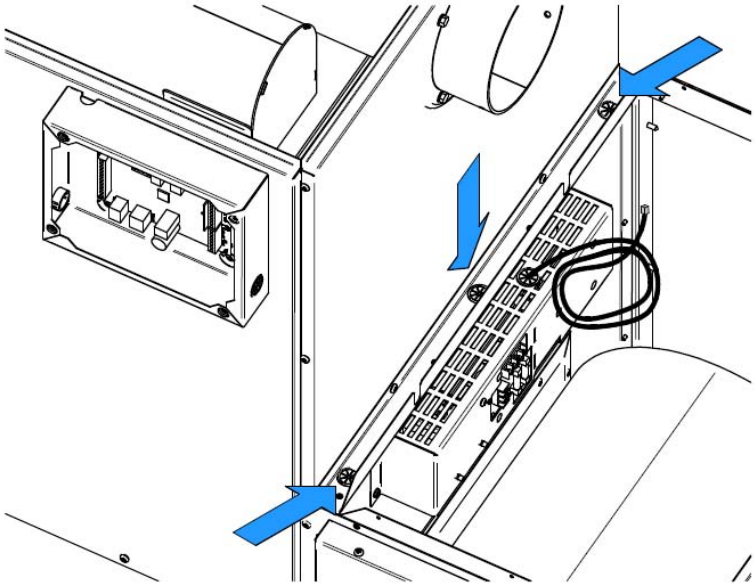

Once the telecommunication wire is out on the desired side, run it along the back of the furnace and pass it through the grommet at the bottom of the link board housing. Complete the connection by plugging the 8 strands telecommunication wire in the right connector, shown by the arrow.

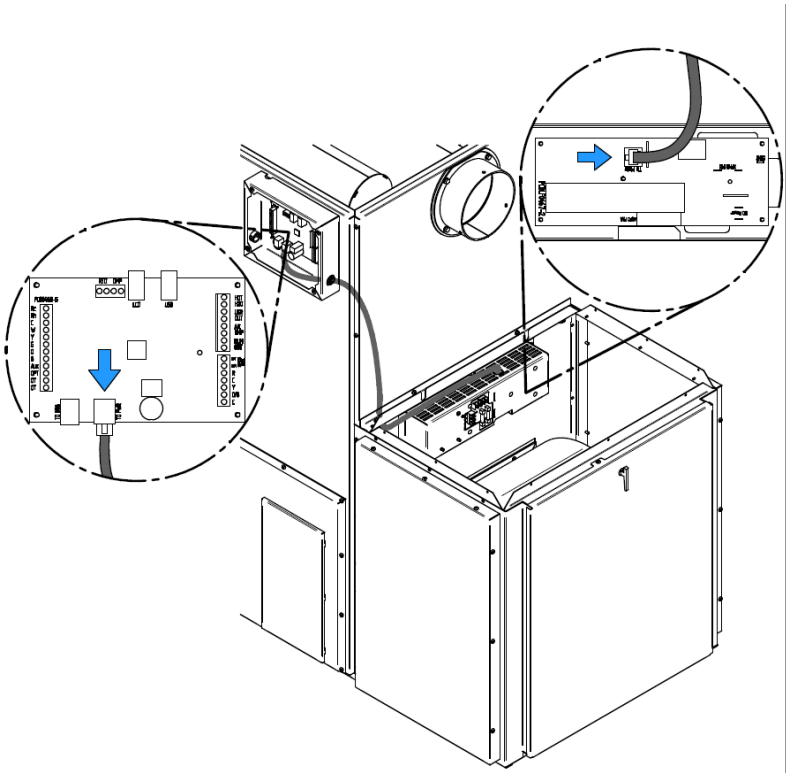

16

Max Caddy Owner's manual English (page 17 of 81)

Your furnace should also be connected to a 115V power source. To do so, open the cover of the power board housing.

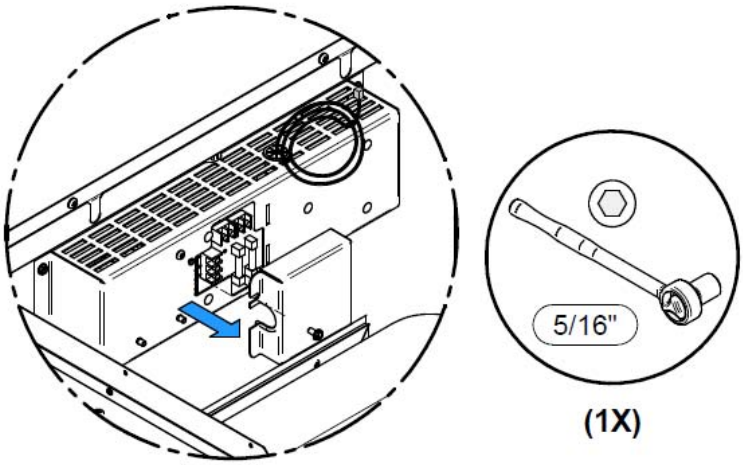

Connect the power cord to the terminals N (Neutral) F (Ground) L (Line). Refer to wiring diagram for connecting components. When done, secure the wires with a BX connector (not included) and replace the blower box cover.

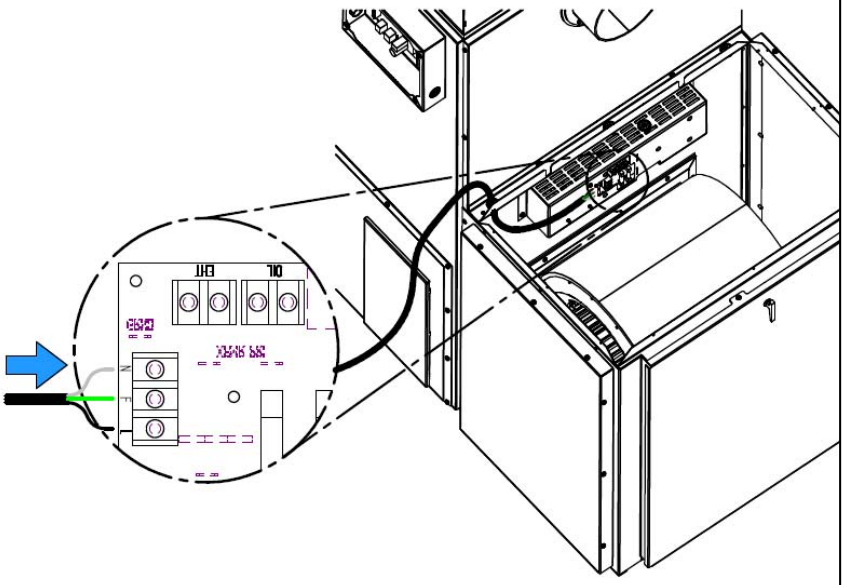

Max Caddy Owner's manual English (page 18 of 81)

9.3. TOUCHSCREEN INSTALLATION AND CONNECTION

The touch screen is used to operate the system. It must be installed on the support provided at the back of the furnace, on the same side as the link board housing.

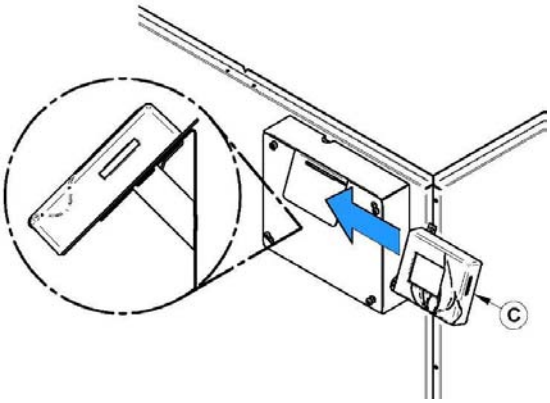

Connect link board with the touch screen using the telecommunication wire provided with the user manual. Plug the telecommunication wire in connector labeled LCD and pull it out of the board housing through the top grommet. Simply run the wire on the side of the furnace using the plastic ties supplied with the user manual. Replace the access panel of the link board. Note that the touch screen is removable if access is restricted.

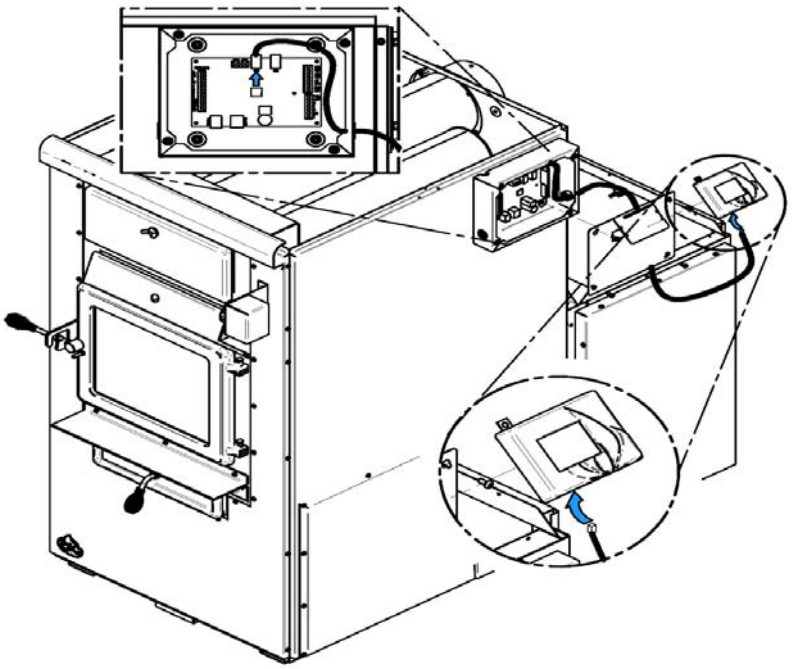

Max Caddy Owner's manual English (page 19 of 81)

9.4. HOT AIR PLENUM TEMPERATURE PROBE INSTALLATION AND CONNECTION (RTD)

On the Max Caddy, a RTD has to be installed on the side of the furnace using the support provided with the unit. The RTD is a sensor that reads the temperature inside the hot air plenum. It is critical to the good operation of the furnace. Refer to electric diagram for connection details. It is important that the RTD and the RTD support be properly fixed onto the hot air plenum.

WARNING: USE WIRING SUITABLE FOR 75 °C (not included).

STEP 1: Remove the two screws already secured to the furnace (B) on the side where you have chosen to install the link board. Then, secure the RTD support (A) using the two screws you previously removed.

STEP 2: Using a drill and a 9/32" bit, drill a hole in the hot air plenum so that the RTD rod can pass into it.

STEP 3 and 4: Secure the RTD in place on the hot air plenum using the two self-tapping screws provided with the owner's manual.

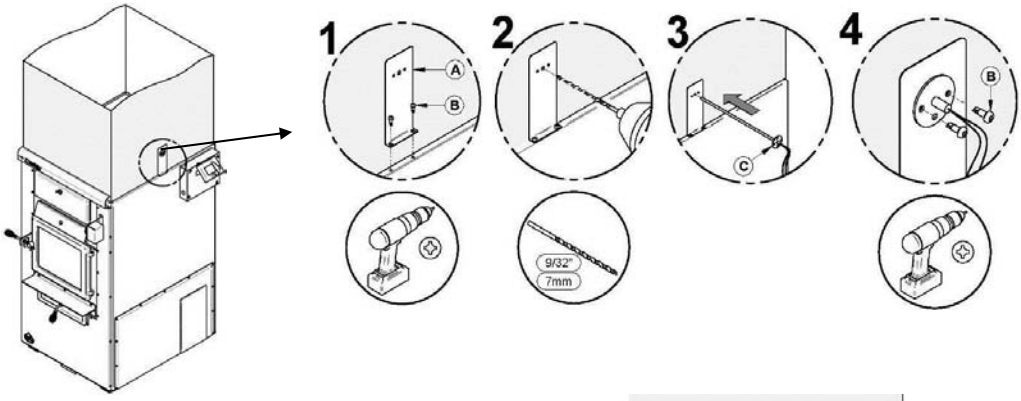

Once the RTD is installed on the support, proceed to its connection to the link board. Pass the RTD wires in the grommet and exit them close to the link board. For board connections, refer to the wiring diagram.

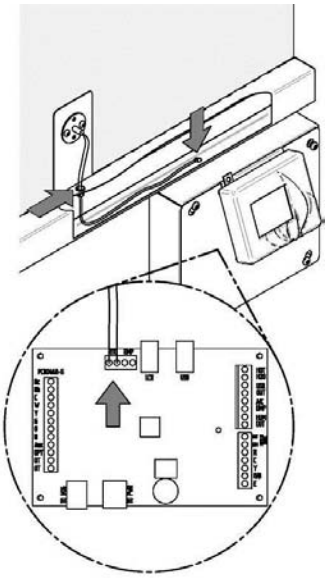

Max Caddy Owner's manual English (page 20 of 81)

9.5. SERVOMOTOR INSTALLATION AND CONNECTION

Your Max Caddy furnace is equipped with a servomotor. To install it, simply screw it in place in the two pre-drilled holes in the front of the furnace using two screws as shown below.

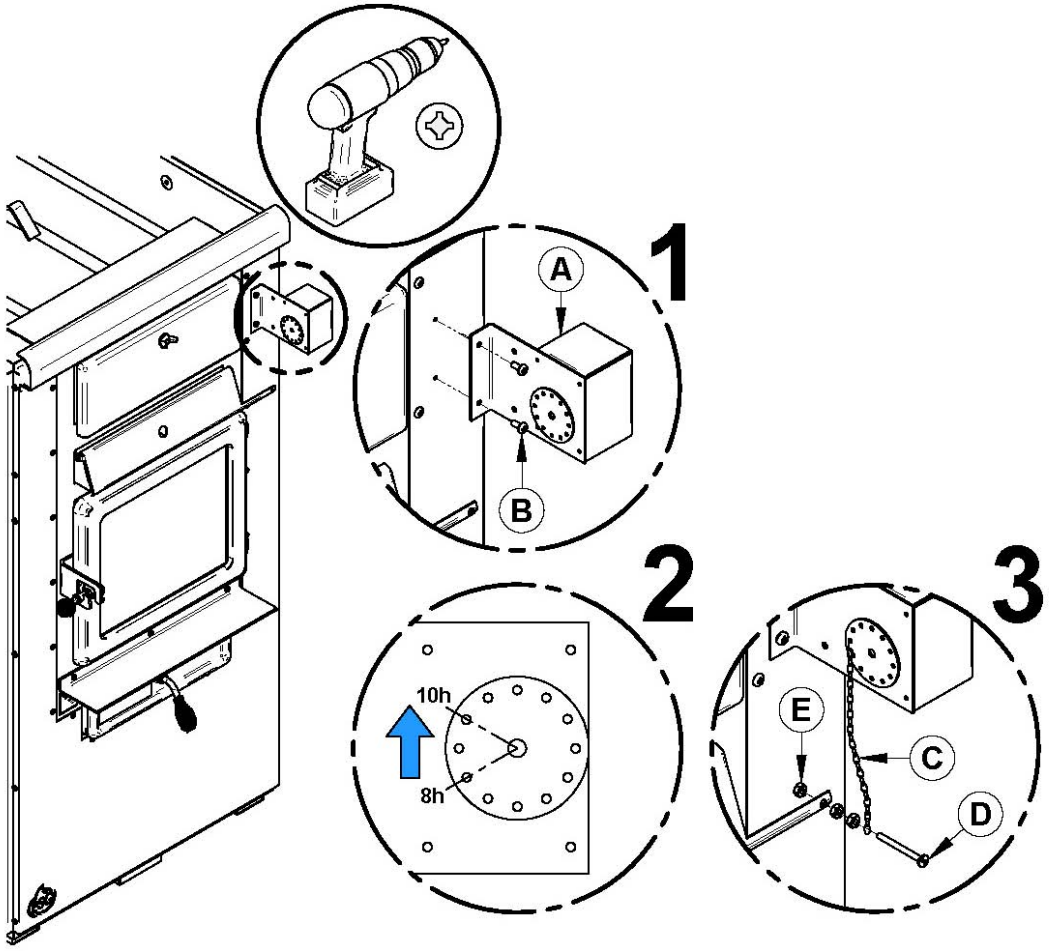

Once installed, install the chain linking the servomotor with the air inlet damper as shown above. The chain must have a set of 1/8". When there is no call for heat, the air inlet damper must be completely closed and the chain must be hooked to the servomotor at the “8 o’clock” position.

Max Caddy Owner's manual English (page 21 of 81)

Then, you must connect the servomotor and the link board. Take the wires out of the servomotor and enter the wires in the wire cover through the grommet. Pull them out through the grommet next to the link board housing.

For connection, refer to wiring diagram.

WARNING: USE WIRING SUITABLE FOR 75 °C (not included).

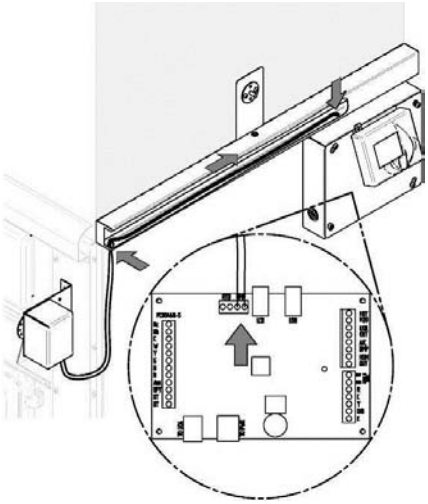

9.6. UNIT LOCATION

For a safe and quiet operation, the furnace must be leveled in both directions and supported evenly to ensure stability.

The furnace must be installed where outside air supply will be sufficient for proper combustion. In airtight houses, it might be necessary to install an outside air inlet (See Section 9.11 - COMBUSTION AIR AND FRESH AIR INTAKE ADAPTER INSTALLATION (OPTIONAL))

The furnace must be positioned so that the connector is as short as possible. Minimize the use of 90º elbows.

The owner must ensure a proper installation to allow a safe operation of the appliance.

9.7. MINIMUM CLEARANCES TO COMBUSTIBLE MATERIALS AND FLOOR PROTECTION

N.B.: This appliance must be installed in accordance with the instructions on the certification plate applied on the unit.

THE INSTALLATION OF THE HEAT SHIELD (-1-) PROVIDED WITH THE FURNACE IS MANDATORY.

Max Caddy Owner's manual English (page 22 of 81)

9.7.1. MINIMUM CLEARANCES TO COMBUSTIBLE MATERIALS

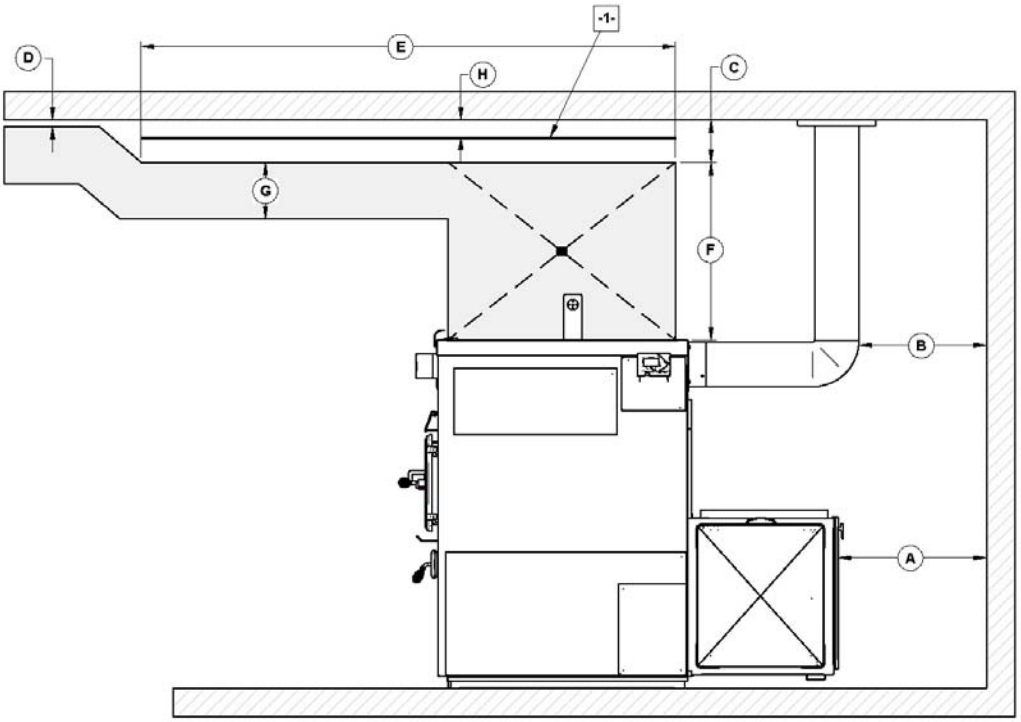

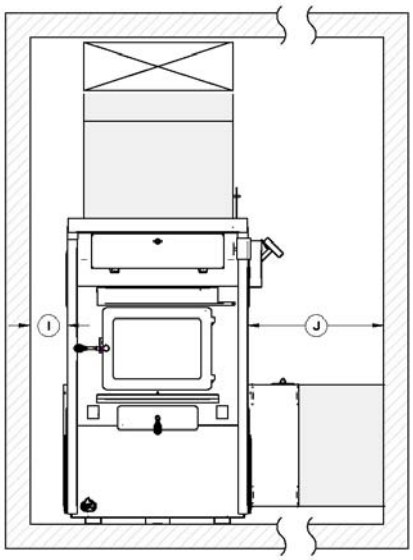

MINIMUM CLEARANCES			
A	24" (610 mm)	**G**	8" (204 mm)
B	18" (458 mm)	**H**	1 1/2" (38.1 mm)
C	6" (153 mm)	**I**	6" (153 mm)
D	1" (26 mm)	**J**	24" (610 mm)
E	72" (1 829 mm)		
F	24" (610 mm)		
-1-	**HEAT SHIELD**		

Max Caddy Owner's manual English (page 23 of 81)

9.7.2. MINIMUM CLEARANCES TO COMBUSTIBLES MATERIALS FOR AIR RETURN DUCT

The return air duct should be at least equal in size to the return air plenum. The air return duct can be installed at zero clearance to combustibles.

9.7.3. MINIMUM CLEARANCES TO COMBUSTIBLES MATERIALS FOR HOT AIR PLENUM

Plenums installed on the furnace must be made of metal in accordance with CSA B365 or NFPA 90B. The hot air duct can be passed through the side wall with a clearance of six (6) inches around thereof.

9.7.4. FLOOR PROTECTION

If the floor is made of non combustible material, no floor protector is required.

If the floor is made of combustible material, a non combustible material floor protector is required (see table below).

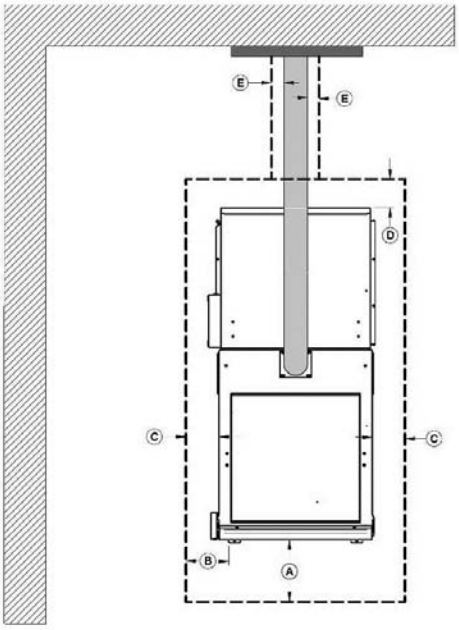

	FLOOR PROTECTION*	
	CANADA	**USA**
A	18" (457 mm) From door opening	16" (406 mm) From door opening
B	N/A (USA only)	8" (203 mm) From door opening
C	8" (203 mm)	N/A (Canada only)
D	8" (203 mm) – Note 1	N/A (Canada only)
E	N/A (USA only)	Note 2

**Steel with a minimum thickness of 0.015" (0.38 mm) or ceramic tiles sealed together with grout. No protection is required if the unit is installed on a non-combustible floor (ex: concrete).*

***Note 1**: The floor protection at the back of the furnace is limited to the furnace's required clearance (A) if such clearance is smaller than 8 inches (203 mm).*

***Note 2**: Only required under the horizontal section of the connector. Must exceed each side of the connector pipe by at least 2 inches (51 mm).*

Max Caddy Owner's manual English (page 24 of 81)

9.8. FLUE AND BAROMETRIC DRAFT CONTROL CONNECTION

Before connecting the stove pipe, make sure you have removed any accessory from the flue pipe such as the scraper, shovel, and the poker.

The flue outlet on the Max Caddy furnace is 6" in diameter and the wood only or wood/electric models may be installed with a 6" chimney approved for use with wood burning heating appliances (2100°F). However, it is mandatory to use a 7" diameter chimney if the retrofit to a wood/oil configuration is probable. In that case, a 6" to 7" reducer must be installed at the flue outlet of the furnace. If the draft exceeds 0.06 IN.W.C., a barometric control must installed. **Never install a manual damper.** Secure the exhaust pipe to the flue adapter with three screws.

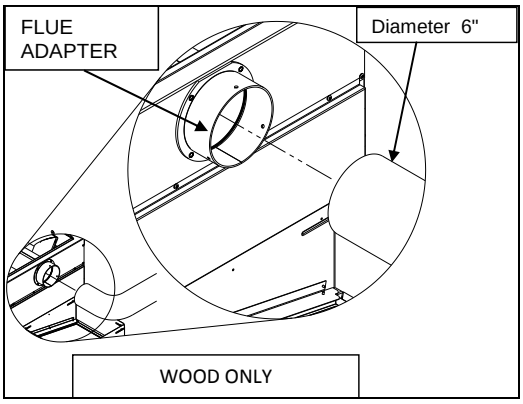

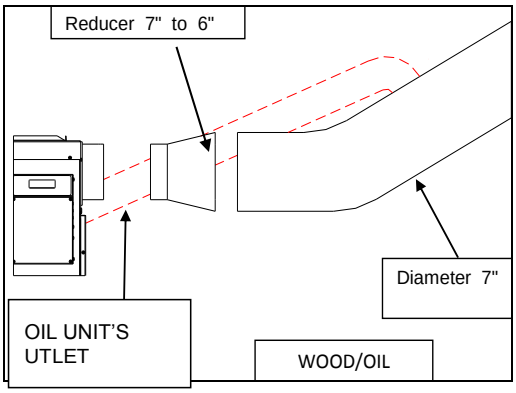

For a proper installation, follow the advice below:

- All the exhaust pipe joints must be secured with three screws.
- Make sure that each screw goes through the inner wall of both connectors (male and female). See pictures below showing a male-female coupling.
- A minimum rise of ¼" per horizontal foot must be respected.

PROPER INSTALLATION

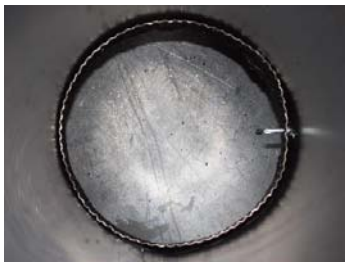

IMPROPER INSTALLATION

Max Caddy Owner's manual English (page 25 of 81)

9.9. ELECTRICAL CONNECTIONS

The following instructions do not replace those of the local code.

Installation and verification of this appliance must be done by a qualified service man.

All wiring from the service panel to the heating unit must comply with the electrical code in force and all local regulations. It is recommended to feed the furnace with its own electrical circuit of 15 amps at 120 volts with a breaker (see wiring diagram).

9.10. DAMPER

If the draft exceeds 0.06 INW.C., a barometric damper must be installed. The barometric damper must be adjusted so that the maximum draft measured at the furnace outlet is limited to 0.06 IN.W.C. Please note that a draft higher than 0.06 IN.W.C. will reduce efficiency and could result in an uncontrollable fire. **On the other hand, the minimum draft to be respected is 0.04 IN.W.C. in the evacuation pipe on the wood side, no matter what type of furnace is use (WOOD, WOOD/ELECTRIC, WOOD/OIL)**

9.11. COMBUSTION AIR AND FRESH AIR INTAKE ADAPTER INSTALLATION (OPTIONAL)

When the furnace and the chimney are completely cold, it may be necessary to provide fresh air by opening a door or a window for a few minutes while lighting the fire. Take note that a house constructed or renovated in order to be airtight may lack the volume of fresh air necessary for the proper combustion of a solid-fuel heating appliance.

In such a case, when starting up the fire, do not operate appliances that evacuate air outside the house, such as:

- Range hood
- Air exchanger
- Clothes dryer
- Bathroom fan
- Ventilated central vacuum system

A fresh air supply may be necessary to prevent solid fuel units from rejecting products of combustion into the house. The indications used to determine if an additional fresh air supply is necessary are not appropriate for all the situations. When in doubt, it is recommended to install a fresh air supply.

A fresh air supply may be needed if:

- Solid fuel units present anomalies, such as irregular draft, smoke return, bad combustion, and/or reversed draft (whether there is combustion or not);
- Existing solid fuel units such as a stove or fireplace release odours, heat badly, cause smoke returns, or reversed draft (whether there is combustion or not);
- The opening of a window, even slightly, in calm weather (windless), eliminates every problem mentioned above ;
- The house is equipped with a tight vapour barrier and adjusted windows, and/or is equipped with an interior air mechanical evacuation device ;
- There is excessive condensation on the windows in winter; and
- The house is equipped with a ventilation system.

If, according to these symptoms or other similar ones, there is insufficient combustion air, it is necessary to ensure an additional combustion air supply.

Additional combustion air can be provided with the following methods, provided that they satisfy chapter 5 of the CSA B365 standard for Canada:

- Direct connection: solid fuel units can be connected directly to a source of new combustion air only if they are certified for this kind of installation, which must respect the manufacturer's instructions. The Max Caddy can be installed with an optional sealed fresh air kit that has been tested with the unit. Consult your dealer.
- Indirect method: new combustion air can be brought into a pipe located within approximately 300mm (12 inches) of the unit. If the pipe is too close to the furnace, it may interfere with its operation.
- Mechanical ventilation system: if the house is equipped with a ventilation system (air exchanger or heat recovery), the ventilation system may provide sufficient auxiliary air to the solid fuel unit. Otherwise, the owner should be informed that the ventilation system may have to be rebalanced by a ventilation technician after the installation of the solid fuel unit.

Max Caddy Owner's manual English (page 26 of 81)

NOTE:
It is recommended to install an outside air inlet with a diameter of at least 4" in the room where the heating appliance is installed (see drawing below). It is preferable to choose a wall which is not exposed to dominant winds, depending on the conditions surrounding your house.

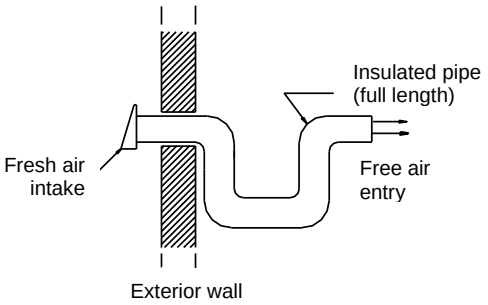

N.B. The owner of the furnace is responsible for the room's air quality in case of negative pressure or temporary negative pressure.

If there is a fan in the wood storage room, make sure it does not create a depression in the room where the furnace is installed.

For more information regarding the installation of fresh air intake adapter, refer to the option's manual.

9.12. HOT AIR PLENUM

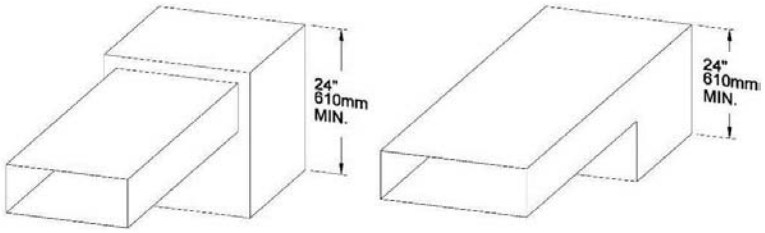

The hot air plenum coming out of the furnace is to have a minimum height of 24" (610 mm). These dimensions for all hot air furnaces are in accordance with the standards CSA B140.4, UL 391 and UL 727.

NOTE: TO ENSURE ADEQUATE STATIC PRESSURE, THE SYSTEM SHOULD BE BUILT IN A WAY THAT THE VOLUME OF COLD AIR RETURN IS AT LEAST EQUAL OR SLIGHTLY HIGHER THAN THE VOLUME OF THE HOT AIR DISTRIBUTION.

9.13. PARALLEL INSTALLATION (US ONLY)

The installation of the Max Caddy with another furnace using the same ductwork is not allowed in Canada. **This type of installation is only allowed in the United States**. Ideally, the maximum BTU input of the existing oil, gas, or electric furnace should be equal or higher than the maximum BTU input of the wood furnace. It is mandatory to respect minimum clearances between the ductwork and combustible material as if the wood furnace was installed as a standalone unit. The ductwork and furnace should be adjusted in order to reach a static pressure of at least 0.20 IN.WC, but not more than 0.50 IN.WC. A back-flow damper should be installed in the plenum. The back-flow damper assures that when either unit is operated by itself, the hot air will flow into the home, and not back through the other furnace. Depending on your installation (see figures examples below), a back-flow damper may be required in each plenum.

CANADA; The installation in parallel i.e. the Max Caddy furnace combined with another, using the same system of hot air ducts is not allowed in Canada.

UNITED STATES; The installation in parallel i.e. the Max Caddy furnace combined with another, using the same hot air duct system is allowed the United States.

Max Caddy Owner's manual English (page 27 of 81)

Conditional to;

- The maximum input power of the existing gas, oil or electric furnace should be equal or lower than 120 000 Btu/h.
- The clearances required for wood furnace must be respected.
- The clearances between the hot air ducts and combustible materials must meet the highest values between the two furnaces.
- The necessary adjustments are made to the furnace or hot air ducts to maintain a static pressure of between 0.20 and 0.50 IN.W.C.
- A backflow damper must be installed to prevent air return in one or the other of the two furnaces and to ensure that hot air will flow into the house and will not return through the plenum of the other furnace. Depending on your system configuration, it is possible that more than one register is required to prevent air returns in the different hot air ducts (see examples below).

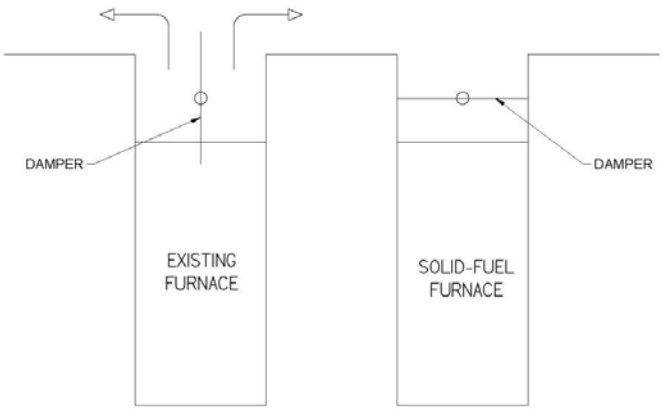

Max Caddy Owner's manual English (page 28 of 81)

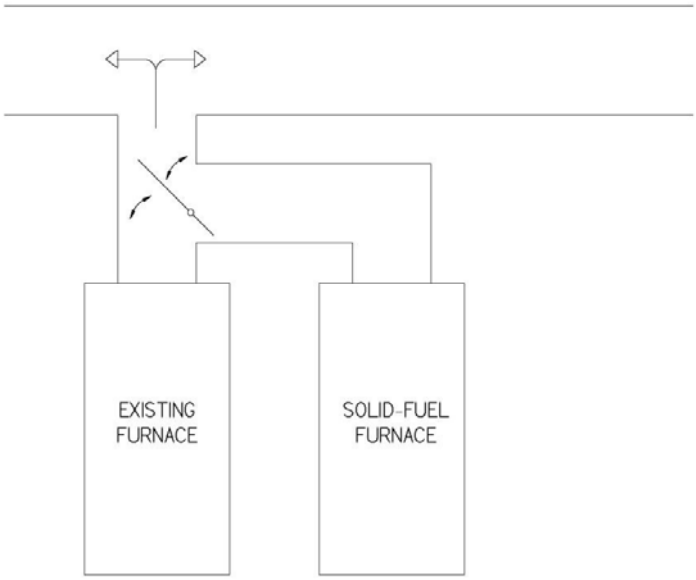

To ensure a safe installation, the two furnaces must not, at any time, run simultaneously. To do so, the thermostat controlling the existing furnace must be connected to your Max Caddy link board. This way, when a heating signal is sent to the existing furnace, the Max Caddy receives the same signal. It will tell the Max Caddy to either not start or, to go into a shut down cycle, if the furnace was already heating when the demand for heat was sent.

The wiring for an Add-on installation is shown below. The existing furnace's thermostat must be connected to the **Rh** and **Aux** terminals of the link board on the Max Caddy furnace. Those two wires must come from the **R** and **W** terminals of the existing furnace's thermostat so the link board receives the heat signal.

Max Caddy Owner's manual English (page 29 of 81)

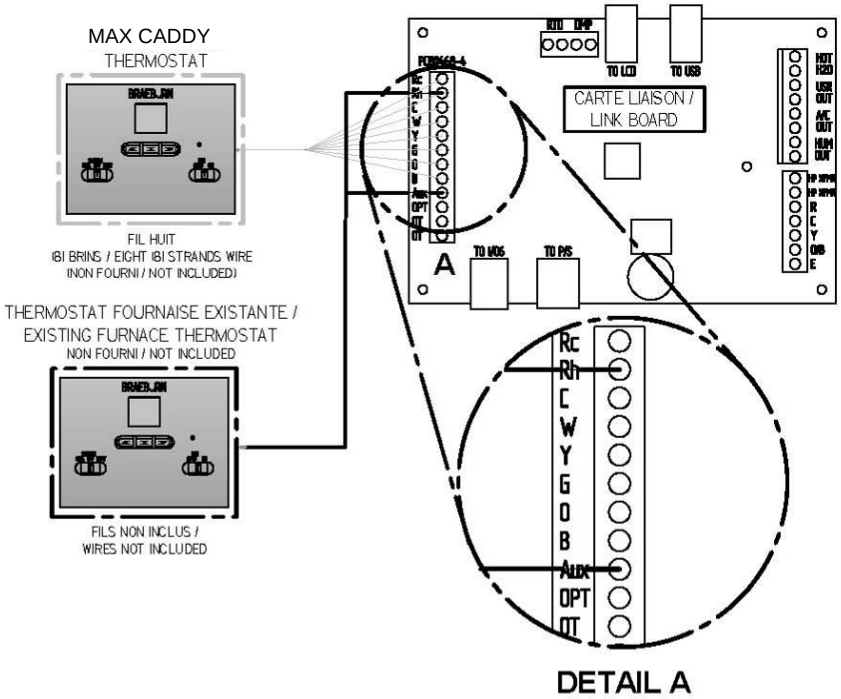

When a heat signal from the existing furnace's thermostat will be sent, the Max Caddy furnace will shut itself down and an envelope will appear on the LCD screen indicating that the existing furnace has taken over. This envelope will disappear when the heat signal of the existing furnace's thermostat will stop and the Max Caddy furnace will resume getting orders from its own thermostat.

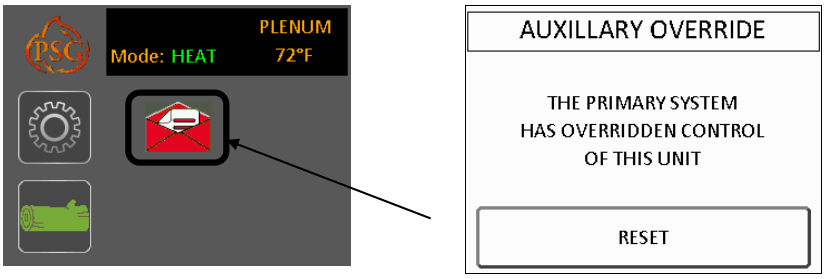

9.14. ELECTRICAL ELEMENT INSTALLATION (OPTIONAL)

9.14.1. INTRODUCTION

Two electrical elements are available for the Max Caddy: and 20Kw et 25kW. These options include all components necessary for the installation. Instructions for installing the electrical elements are provided with the electrical element.

WARNING: USE WIRING SUITABLE FOR 75 °C (NOT INCLUDED).

Max Caddy Owner's manual English (page 30 of 81)

9.14.2. CONNECTING THE ELECTRICAL ELEMENT

MODEL	THEORETICAL OUTPUT	TEMP. VAR. (° F)	BTU/HR	AMPS TOTAL	BREAKER REQUIRED	FEEDER GAUGE	VOLTAGE SINGLE PHASE	ELEMENTS QTY
20 kW	2,100	75	68,240	85	125 amps	3	120/240	4 x 5 kW
25 kW	2,100	85	85,325	100	150 amps	2	120/240	5 x 5 kW
WOOD	2,100	100	180,000	5	15 amps	14	120	N/A

Electrical connections must conform to the wiring diagram supplied with the option.

The electrical element must be connected to the power board (See Section 17 - ELECTRICAL DIAGRAM FOR ELECTRIC UNIT). For security reasons, the electrical element has a manual reset thermostatic sensor that is located inside the electrical unit. If the temperature of the electric unit exceeds the high limit, the thermostatic sensor will disengage the elements. After finding and fixing the problem that has caused the unit to overheat (static pressure too high, fan breakdown, etc.), reactivate by pressing the red “manual reset” button on the thermostatic sensor (L-170 thermodisc).

INSIDE VIEW OF ELECTRIC ELEMENT

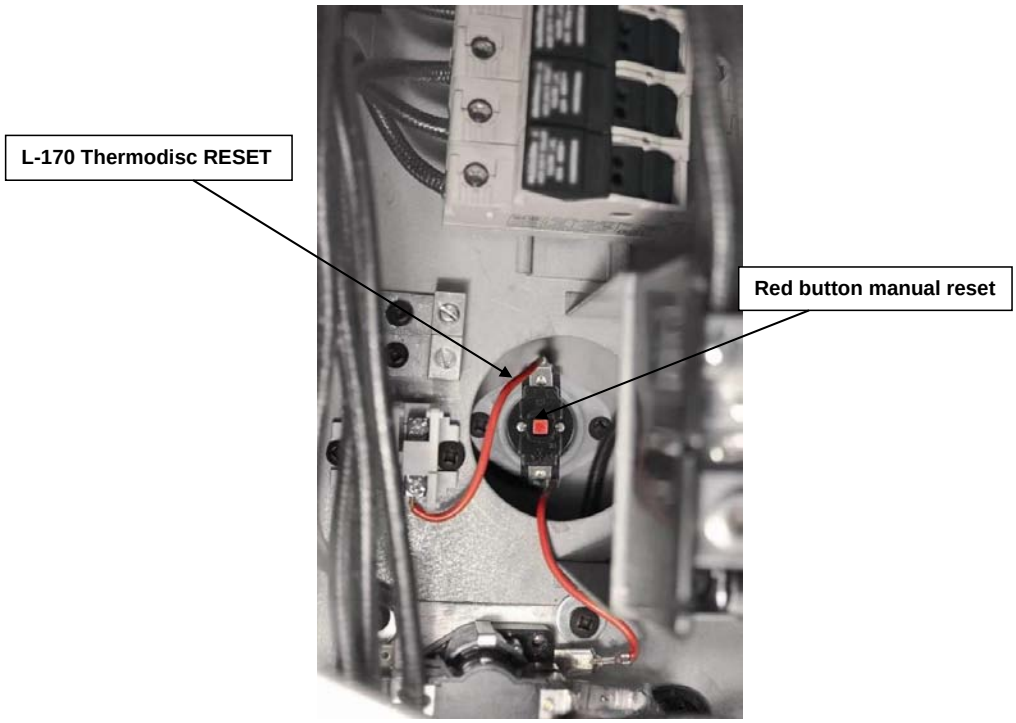

Max Caddy Owner's manual English (page 31 of 81)

10. THERMOSTAT INSTALLATION

10.1. WOOD FURNACE ONLY

The furnace must be connected to a thermostat. You can use the one provided with the unit or use one that is already installed in your home. The thermostat must be installed on an inside wall and located where it is not likely to be affected by the draft coming from an air outlet. It must be installed at a minimum of 55 inches (140cm) above the floor.

It is recommended to connect the thermostat to the furnace with a seven or eight threads wire connecting terminals Rc, Rh (connect only one of the two terminal R if there is a jumper between Rc and Rh in the thermostat), C, W, Y, G, O and B. If the thermostat is using a dry contact (powered by batteries), it is not necessary to connect the C (common) terminal to the thermostat. Refer to the electrical diagram.

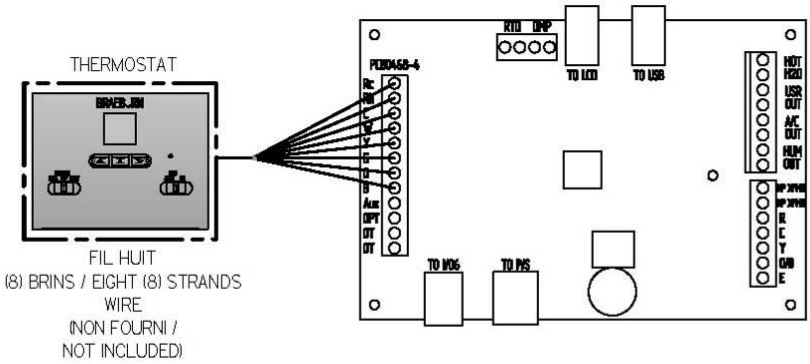

Once wired to the furnace, it is possible to verify the signals coming from the wall thermostat. Simply go on the touch screen main menu, under the “TROUBLESHOOT LINK’’ menu and going to page 1 as shown below. When a signal is sent from the thermostat, the circle corresponding to the signal should appear green.

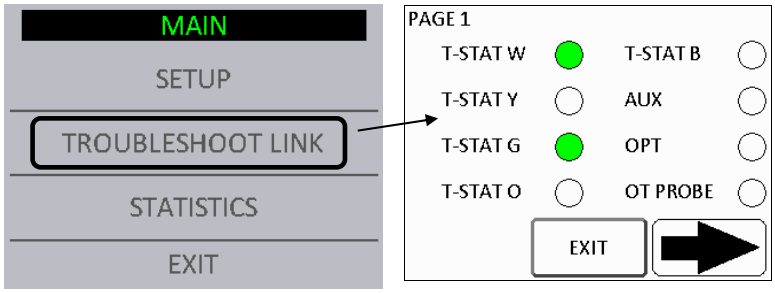

10.1.1. COMBINATION WOOD-ELECTRIC OR WOOD-OIL FURNACE

Only one thermostat is necessary to control the wood furnace and any other auxiliary heating source. Installing the thermostat is done the same way as if the furnace was wood only. See Section 11.4.1 - TRANSITION TO AN AUXILIARY HEAT SOURCE to learn how to make it work.

10.1.2. COMBINATION WOOD-ELECTRIC-OIL

Only one thermostat is necessary to control the wood furnace and any other auxiliary heating source. Installing the thermostat is done the same way as if the furnace was wood only. See Section 11.4.1 - TRANSITION TO AN AUXILIARY HEAT SOURCE to learn how to make it work.

Max Caddy Owner's manual English (page 32 of 81)

10.2. INSTALLATION OF AN AIR CONDITIONING UNIT

The Max Caddy furnace has been tested with an optional air conditioning unit. If this option is chosen, we recommend an installation as per the graphic provided below.

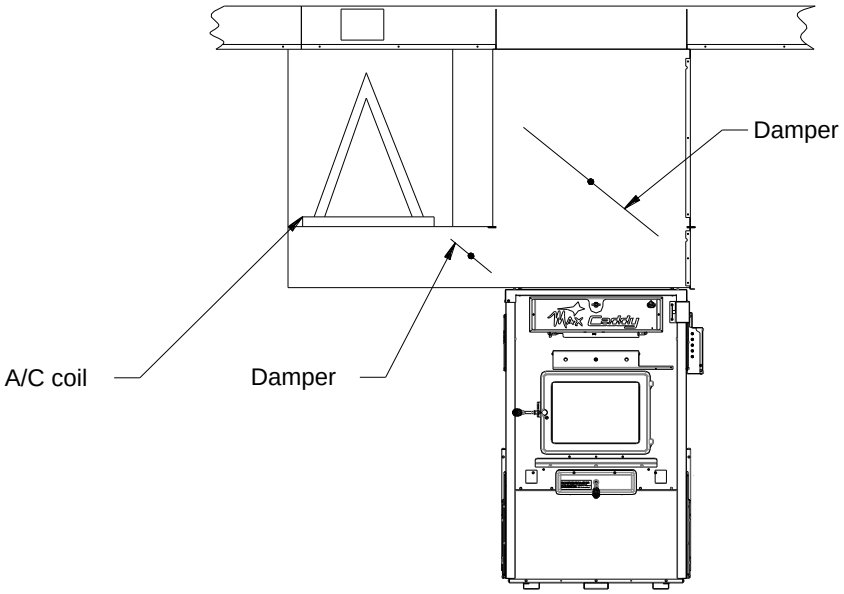

This installation will provide the most efficient and safe operation of the air conditioning unit using the distribution blower of the Max Caddy furnace during summer. In order to complete the installation of an air conditioning unit, the main thermostat must be a “heat/cool” type. Furthermore, the desired distribution blower speed must be programmed on the touch screen in the blower speed menu. (See Section 11.5 DISTRIBUTION BLOWER SPEED CONFIGURATION

It must be noted that upon thermostatic demand for cooling, the distribution blower will start immediately at the programmed speed. For the air conditioning damper wiring see Section 28 - LINK BOARD OPTIONS CONNECTIONS.

The capacity and characteristics of the air conditioning unit that has been tested with the MAX Caddy are stated below. The use of another brand with similar capacity and characteristics is adequate.

Condenser brand: Goodman GSX13048
Capacity: 4 ton
Coil type: Type A, CAUF uncased indoor coil.

10.3. HEATPUMP INSTALLATION

It is possible to pair a heat pump to the Max Caddy. To determine the priority of operation of these two modes of heating, you must go to Section 11.4.3 **-** AUXILIARY HEAT SOURCE PRIORITIZATION.

For connection of the heat pump to your furnace, see Section 28.7 - HEAT PUMP

Note: If a heat pump is connected to the Max Caddy, the electrical element must be installed to ensure an auxiliary heat source. (PA08535 (20kW), PA08545 (25kW)

For installation of air conditioning coil, refer to Section 10.2 - INSTALLATION OF AN AIR CONDITIONING UNIT.

Max Caddy Owner's manual English (page 33 of 81)

10.4. INSTALLATION OF A DOMESTIC WATER PRE-HEATING SYSTEM OR A HUMIDIFIER

A water heating loop option is also available to pre-heat domestic water using the energy produced by the Max Caddy wood furnace. This water loop kit will be inserted between the wood combustion chamber and the heat exchangers. When heating with wood, the heat from the furnace will pre-heat domestic water that will be stored in a feed tank before entering your existing water heater. Removable panels are installed on both sides of the furnace for quick and easy installation of the loop. A 24 volt solenoid valve must be installed at the inlet of the loop and must be connected to the HOT H_20 terminal on the PC board; when the plenum temperature reaches 120°F, the valve opens to allow water circulation. It closes when the temperature drops below 100°F to prevent overcooling the combustion chamber during low firing rates. See section 28.3 - HOT WATER for electrical connection. Complete installation and operation instructions for the hot water loop kit are supplied with the kit.

NOTE : NEVER INSTALL AN AUTOMATIC FEEDER.

The HUM OUT terminal may also be used to activate the 24 volt relay of a humidifier installed in the system which, when connected to the PC Board, will be activated and deactivated at the same temperatures as the water solenoid valve (120°F et 100°F). See section 28.6 - HUMIDIFIER for electrical connections.

To verify the status (open or closed) of the valve/relay, see section 14.1 - VALIDATING STATUS OF A COMPONENT.

11. CONFIGURATION AND OPERATING INSTRUCTIONS

11.1. CONTROLS SYSTEM

The Max Caddy has a sophisticated electronic control. This system is more versatile. All connections are made from the control panel. Terminal blocks are provided for all components and options.

Before you configure your system and learn how to operate it, make sure that your wall thermostat is wired correctly to your furnace, that the temperature probe (RTD) is well installed in the hot air plenum and connected to the link board and that your air distribution system is complete.

The furnace uses a touch screen, the latest technology in control devices. Blowers, power supplies and options are controlled from this screen.

It is important to note that your furnace is equipped with three main electronic components: the link board, the power board and the touch screen. The power board is already installed in the blower box.

The power board is used to supply current to the different electrical components, in particular:

- Supply current to the different electronic boards;
- Supply current to the distribution fan;
- Supply current to the sequencers of the electrical unit (optional);
- Supply current to the oil burner.

The link board is used more precisely for:

- Connecting the hot air plenum's temperature probe (RTD type);
- Connecting the wall thermostat;
- Connecting complementary equipments;
- Connecting a heat pump.

The LCD touch screen is used to operate the system. More precisely for:

- Choosing the combustion parameters;
- Selecting the options used;
- Show the temperature in the hot air plenum;
- Selecting heating priority;
- Selecting language and units displayed;
- Viewing statistics;
- Selecting distribution fan speeds;
- Troubleshooting to detect problems with the appliance.

Max Caddy Owner's manual English (page 34 of 81)

11.2. SYSTEM CONFIGURATION

Once the installation is complete and before using the unit, the furnace should be configured to activate all applicable functions depending on options chosen. To do this, it is important to know which options are installed on your furnace.

11.3. TOUCH SCREEN

The LCD control is an electronic visual display as well as a touch screen that will light-up as you touch any location on the display area. The main status page will then display different icons layout depending if the furnace is on or not.

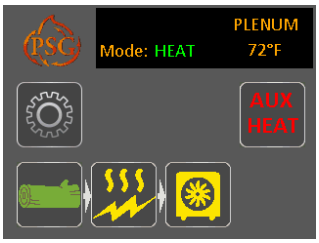

Main menu – Furnace « ON »

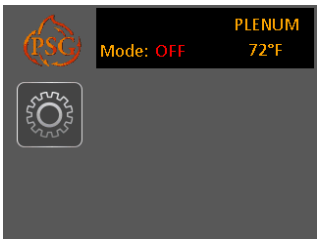

Main menu – Furnace « OFF »

11.3.1. ICONS DESCRIPTION

Icons	Description	Icons	Description
	Wood heating Green : Heating mode Yellow : Auxiliary heating mode		Electrical Element Green : Unit on Yellow : On hold
	Heat pump Green : Unit on Yellow : On hold		Oil unit Green : Unit on Yellow : On hold
	Settings		Displayed when an auxiliary heat source has been selected.
	Temperature in the hot air plenum		Distribution blower is in circulation mode. (CIRC)
	Possible states of the furnace: HEAT: When the word HEAT is green, the furnace is in heating mode. If the furnace is waiting for a demand for heating, the word HEAT is written in yellow. COOL: When the word COOL is green, the furnace is in cooling mode. If the furnace is waiting for a demand for cooling, the word COOL will be written in yellow. OFF: The furnace is stopped.		

Max Caddy Owner's manual English (page 35 of 81)

11.3.2. LANGUAGE SELECTION AND TEMPERATURE UNIT

To choose the language and temperature unit, press the "Settings" button. In the "Main" menu, choose "SETUP" and then "GENERAL". Choose the preferred language and temperature unit.

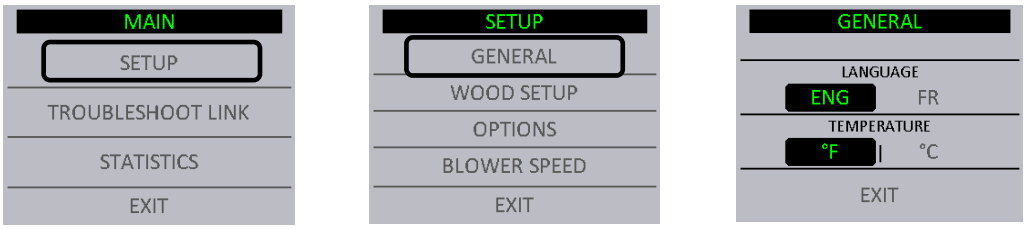

11.4. ADDING AUXILIARY HEATING SOURCE AND SELECTION OF OPTIONS

To add an auxiliary source of heating or to add options to your furnace, press the "Settings" button. On the “MAIN” page, choose “SETUP” and “OPTIONS”.

By default, no auxiliary source of heating or options are selected. To select an option, simply press the white square to the left of the desired option. When an option is chosen, the selected square turns green.

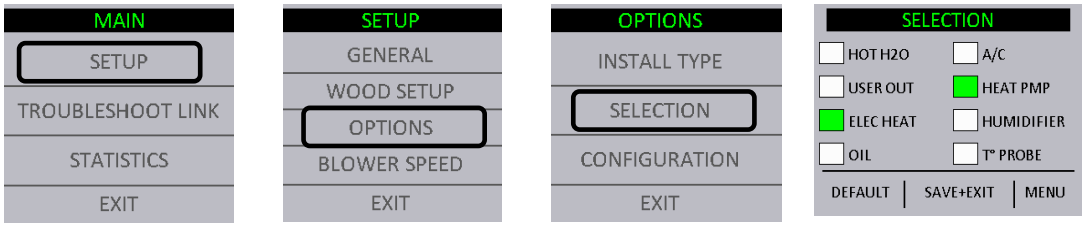

To confirm the selection of your options, press the button " SAVE + EXIT ". This step takes you to a list of questions about your selections that are essential for their good functioning.

11.4.1. TRANSITION TO AN AUXILIARY HEAT SOURCE

When there is a demand for heat, the furnace checks the temperature in the plenum. If the temperature is beyond the KIP, the fan will turn on. If the temperature is below the KIP, the furnace will wait the "Rise Time" delay and check the temperature again in the plenum. If the temperature in the plenum goes up 20°F but has not reached the KIP, the furnace will wait for additional time ("KIP Time") and recheck the temperature in the plenum. If the temperature has not reached the KIP, the auxiliary heating will start. The icon "Wood" will turn yellow and the auxiliary heat icon will turn green.

For the electrical element and/or the oil unit, the fan starts as soon as the thermostat asks for heat. In other words, for safety reasons, the fan does not wait for the hot air plenum to reach a predetermined minimum temperature.

The furnace remembers what heating source was used in the last request of the thermostat. If the last heating demand was met by the auxiliary heater, the furnace automatically start this one.

To restart the furnace using the wood mode, go on the touch screen on the main page and press on the wood icon. The icon will become green and the auxiliary heating source icon will become yellow.

11.4.2. TRANSITION SETTINGS

It is possible to slightly adjust the transition settings from the wood option to the auxiliary source of heating. To do this, go to the "MAIN" page on the touch screen under the "SETUP" option and choose "WOOD SETUP ". On this page, you can change the KIP, KOP, the Rise Time and KIP Time.

KIP (Kick-In point): Temperature of the plenum where the fan turns on.

KOP (Kick-Out point): Temperature of the plenum when the fan stops.

Rise Time: Time allowed for plenum temperature to increase by 20 ° F.

KIP Time: Additional time allowed to reach the KIP when the Rise Time ended with an increase of 20°F.

Max Caddy Owner's manual English (page 36 of 81)

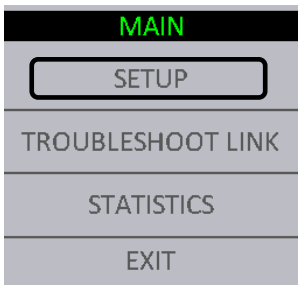

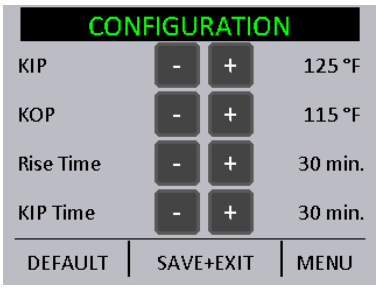

11.4.3. AUXILIARY HEAT SOURCE PRIORITIZATION

If you have configured one or many auxiliary heating sources (electrical element, heat pump, oil), you must choose the priority order when there is a heating demand. If, for example, the wood no longer provides sufficient heat, the auxiliary heating selected in priority one will take over. If priority one no longer provides enough heat, or does not provide it fast enough, priority 2 will take over. Heating priorities are chosen in the "MAIN" menu, under the "SETUP" option. Select "OPTIONS" and "CONFIGURATION". Use the arrows to select the priority order.

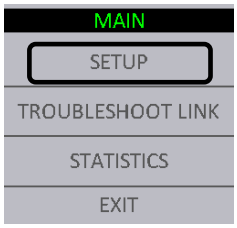

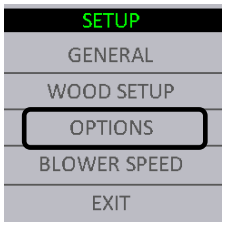

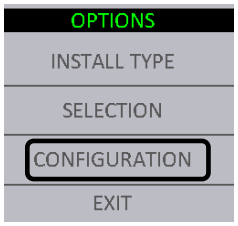

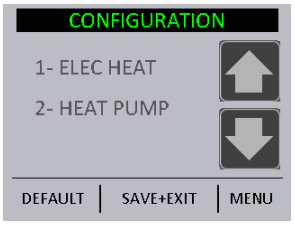

11.4.4. EXTERNAL TEMPERATURE PROBE

It is possible to connect an external temperature probe on the Max Caddy. This temperature probe is used primarily to reduce electricity consumption and reduce the bill by prioritizing the transition to an auxiliary heating source when it is too cold outside or when it is the overcharging billing period (peak usage) depending on the electricity supplier.

HEAT PUMP : With a combination wood, electrical component and heat pump you can set your temperature probe to not use your heat pump when it is too cold and the coefficient of performance becomes too low. (Electrical element should be prioritize during configuration the outdoor temperature probe.)

When the temperature probe is functioning, the « ECO » mode will show on the main page.

11.4.4.1. "BI-ENERGY" FUNCTION

The bi-energy function is used when a local utility company (Hydro-Quebec for instance) offers a bi-energy program under which a preferential rate is given, provided that the appliance is equipped with an electronic control that guaranties the use of a particular source of energy (ex: electricity) based on a given criterion (ex: the outdoor temperature).

When the MAX Caddy is programmed for bi-energy, the temperature probe (normally open contact) is connected to the PC board (See Section 28.2 - OUTDOOR PROBE). The contact remains open for as long as the outside temperature is above a certain value (this reference value is programmed into the system provided by the utility company). As long as the contact remains open, the electrical unit supplies the heat when the wood is not able to satisfy the thermostatic demand. If, however, the outside temperature reaches a level below the reference value, the contact closes and the oil unit is used as the option for heat if the wood is not able to satisfy the thermostatic demand.

Max Caddy Owner's manual English (page 37 of 81)

11.5. DISTRIBUTION BLOWER SPEED CONFIGURATION

It is possible to adjust the speed of the distribution blower for circulation mode, air conditioning and any other mode of auxiliary heaters.

NOTE: When heating with wood, the fan distribution speeds are programmed in order to provide the best thermal exchange and cannot be changed.

It is possible to adjust the blower speed in “CIRCULATION” mode at any time by going in the main menu under “CONFIGURATION” and “BLOWER SPEED”.

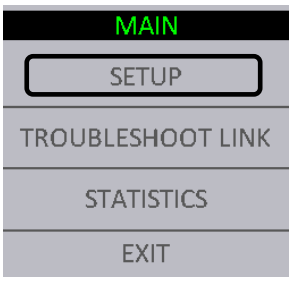

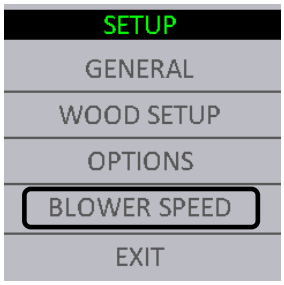

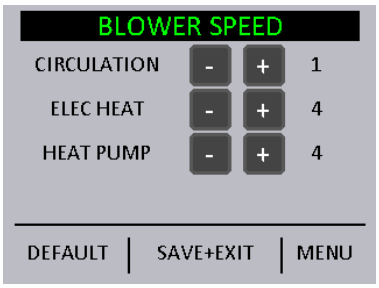

The blower speed adjustments for auxiliary heating are available only if the option was activated. The selected speed in this menu will be the speeds used in the "CIRC", "COOL" and "HEAT" mode.

The adjustment of all controls must be done by a qualified technician. The controls settings and the blower speed must conform to the recommendations of the CMMTQ.

11.5.1. DISTRIBUTION FAN SPEEDS

Your furnace is equipped with a 4-speed blower. Using the central processing unit, we have created 6 functional speeds. Refer to the following table for the various speed configurations.

Functional Speed	Corresponding data	CFM*	Static pressure
1	Blower speed #1 using 98V	600	0.2" H_2O
2	Blower speed #1 using 115V	760	0.2" H_2O
3	Blower speed #2 using 98V	840	0.2" H_2O
4	Blower speed #2 using 115V	950	0.2" H_2O
5	Blower speed #3 using 115V	1150	0.2" H_2O
6	Blower speed #4 using 115V	1260	0.2" H_2O

*These results were measured at exit of plenum during laboratory tests. Results may vary depending of the configuration and installation.

11.6. SYSTEM BALANCING

It is important to call upon a professional installer for the installation of the furnace and the ducting system configuration. Certain check-ups must be performed and certain rules must be respected in order not to damage the blower.

When all components are installed on the furnace and the ducting system is connected to the various rooms of the house, you must balance the ducting system. In order to do so, start the distribution blower by going in the ‘’TROUBLESHOOT LINK’’ menu on Page 5 and select speed #4.

Max Caddy Owner's manual English (page 38 of 81)

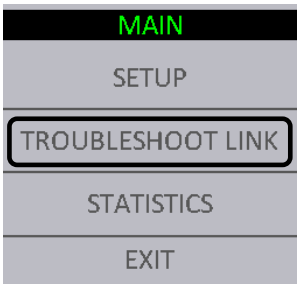

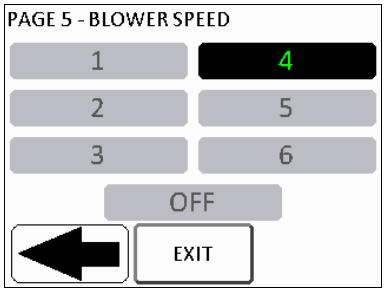

It is important to respect the velocity in the main duct, the secondary ducts, as well as the velocity at the room outlets. The static pressure of your system must be adjusted to at least 0.2 IN.W.C. and must not exceed 0.5 IN.W.C. Finally, make sure that you never exceed the maximum blower current.

11.7. OPERATING INSTRUCTIONS

11.7.1. HEAT Mode

When the temperature in your house is below the value at which your wall thermostat is programmed, a signal is sent to your furnace through the PC board, activating the motorized damper located in front of the furnace and thus allowing more oxygen to the fire. The RTD temperature probe, located inside the hot air plenum of your furnace, reads the plenum temperature continuously. When the temperature reaches the start-up value selected by the user (KIP – *Kick-in Point*), the distribution blower starts functioning at the minimum speed. Thereafter, the blower increments its speed until it reaches the best efficiency point (BEP) determined by the manufacturer. If the temperature inside the hot air plenum exceeds the limit determined by the manufacturer, the blower automatically selects the maximal speed and the motorized damper closes in order to slow down combustion. When the temperature returns to a safe level, the blower speed gradually returns to the speed required to maintain the BEP.

11.7.2. COOL Mode

If an air conditioning unit is installed, the PC board will have to be connected to a dual-function wall thermostat (e.g. “heat/cool”) in order to synchronize the start of the furnace blower with the start of the air conditioning condenser. Upon receiving the wall thermostat’s signal, the furnace blower will start functioning at the speed selected by the user.

11.7.3. CIRC Mode (air circulation)

This mode is used to circulate air during summer. Thus you will benefit from your ducting system to circulate fresh air from your basement throughout the house. To activate the circulation mode, put the thermostat in FAN-ON mode.

Max Caddy Owner's manual English (page 39 of 81)

11.8. WOOD HEATING

11.8.1. LIGHTING

1. Open the furnace door

   Note: If there is already a bed of coals in the firebox, go to pre-heating.

2. Place one or two dry kindlings at the front of the furnace.
3. Place newspaper strips on top of the kindlings.
4. Cover the newspaper with more kindlings and small pieces of dry wood.
5. Add newspaper strips, then light the fire a low as possible and leave the door 1/2" (13 mm) opened. If you fail lighting the fire, you might experience a back draft through the air inlets.

11.8.2. PREHEATING

1. Once the kindling is well ignited or the coals revived, put 2 or 3 fire logs in such a way that the flames can interlace between the logs. Then, close the door. It is important to respect these loading sequences so that the wood will burn from the front to the back of the furnace.
2. Wait 15 to 20 minutes, then proceed with loading the furnace.

11.8.3. HEATING

1. When loading the furnace, lower the kindled pieces of wood and place them at the center of the combustion chamber before adding new logs.
2. Do not overload. Air must circulate freely in the upper part of the combustion chamber in order to obtain an efficient operation of the appliance (secondary burn). Please note that a small hot fire will produce much less residues than a large, smouldering one.

IMPORTANT: DURING THE HEATING PROCESS, REMOVE THE ASHES AND WOOD THAT COULD OBSTRUCT THE 1/4" (6.4 mm) HOLE (PILOT) LOCATED BELOW THE DOOR, INSIDE THE FURNACE'S COMBUSTION CHAMBER.

PROCEDURE TO OPEN THE LOADING DOOR

TO MINIMIZE THE RISK OF SMOKE SPILLAGE, OPEN THE DOOR 1"
AND WAIT ABOUT 10 SECONDS BEFORE OPENING IT COMPLETELY.
THE PURPOSE IS TO STABILIZE THE PRESSURE INSIDE THE FURNACE.

11.8.4. EARLY SIGNS OF AN OVERFIRED FURNACE:

- Roaring fire.
- Chimney connector is glowing red.
- Extreme heat coming from the furnace. If this occurs, **DO NOT OPEN THE DOOR**. Shut-off the air inlet opening completely, and wait until the glow has completely subsided.

ALWAYS KEEP THE DOOR AND THE ASH DRAWER CLOSED
(except for lighting and maintenance).

Max Caddy Owner's manual English (page 40 of 81)

11.8.5. WOOD AS HEATING FUEL

ATTENTION

NE JAMAIS FAIRE BRÛLER DE DÉCHETS, DE LA GAZOLINE, DU NAPHTA, DE L'HUILE À MOTEUR OU TOUT AUTRE PRODUIT SEMBLABLE.

We recommend that you burn dry hard wood only.

There are two important factors to be considered when choosing a type of wood: the moisture content and the wood density. Hardwood, oak and beech for example, will provide better results because of the high density and minimal tar produced during combustion. It is highly recommended to use wood that has been dried for at least six months.

DO NOT USE COAL AS HEATING FUEL IN THIS APPLIANCE.

Whenever a high rate of smoke is noticed in the room, you must:

1. Open doors and windows.
2. Make sure the furnace door is closed as well as the damper (if necessary, lower the thermostat starting point or unhook the damper chain and close the barometric draft control manually).
3. When the furnace has cooled down, inspect the chimney to detect obstructions and consult a specialist to determine the cause of the smoke spillage.

11.8.6. PROLONGED POWER FAILURE

In case of prolonged power failure (over 10 minutes), to reduce the risk of overheating, it is recommended to heat moderately and to open the furnace filter compartment in order to facilitate air circulation by natural gravity around the firebox of the Max Caddy wood furnace.

11.8.7. CHIMNEY FIRES

This might occur when the fire gets extremely hot. Burning cardboard, branches, or small pieces of wood can ignite the creosote residue accumulated in the evacuation flue system. The usual signs are:

1. Rumbling.
2. The flue gets extremely hot (red).
3. Flames or sparks are coming out of the chimney.
4. In case of a chimney fire, call your local fire department immediately and sprinkle the roof around the chimney with water.

Make sure that the furnace door is closed as well as the damper (if necessary, lower the thermostat starting point or release the chain from the damper and close the barometric draft control manually).

If the fire gets uncontrollable due to an improper use or because the draft is too strong, follow the same procedure as in a chimney fire except that you will have to **OPEN** the barometric draft control manually.

11.8.8. LOCAL FIRE DEPARTMENT

Phone number: _____

Max Caddy Owner's manual English (page 41 of 81)

12. MAINTENANCE

12.1. MAINTENANCE OF THE EXCHANGERS

Heat exchangers must be cleaned thoroughly at the end of every heating season. During summer, the air in basements is damper and with minimal air circulation within the furnace, it can mix with creosote and/or sooth deposits in the exchangers to form an acid that could accelerate the corrosion process and induce premature decay of the steel. Corrosion damages are not covered under warranty.

Smoke pipe and exchangers must be inspected regularly during the heating season. Access to the exchangers is easy and does not require tools; just remove the decorative facing by just lifting it, remove the wing nut that keeps the hinged access panel closed. (See pictures below)

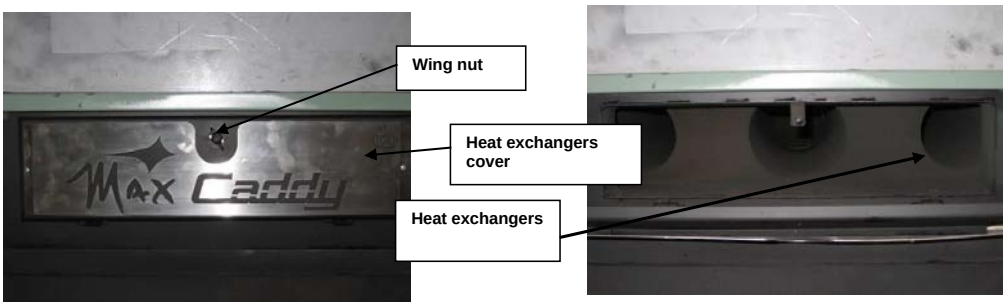

Before cleaning the three exchanger pipes, move the upper vermiculite baffle board of the combustion chamber forward (see drawing on next page). Using the scraper, clean the three exchanger pipes. The accumulated dirt in the lateral exchangers will fall into the combustion chamber; the dirt in the central exchanger will have to be removed from the front or the back of the furnace. Then, ensure that the upper baffle board is free of ashes. **Do not forget to push the upper baffle board back to its original position.** Finally, close the exchanger access door.

Max Caddy section view

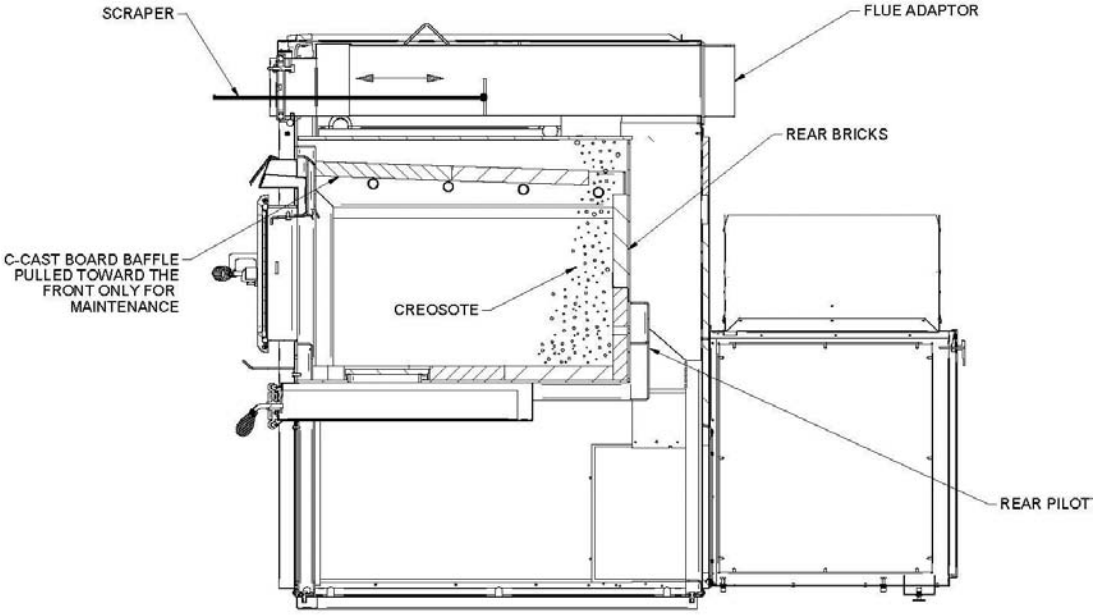

Max Caddy Owner's manual English (page 42 of 81)

12.2. CHIMNEY MAINTENANCE

The most efficient way to sweep a chimney is to run a hard chimney sweeping brush. Brush from the top down so sooth and creosote deposits will detach from the chimney liner and fall down to the bottom of the chimney where it can be easily removed.

The chimney must be inspected regularly and any creosote build-up must be removed without delay. Monthly cleaning should be sufficient during cold winter months while more frequent cleaning could be required during milder periods.

12.3. SMOKE PIPE INSPECTION

- The smoke pipe must be inspected regularly during the heating season.
- The pipe must be examined carefully to detect any defect or damage.
- The pipe can be reassembled if no defect is detected and defective pipe must be replaced immediately.
- Burn wood only in this furnace.
- As a combustible, well seasoned hardwood in 18" to 22" logs works best
- Regularly, examine the flue pipes, the joints, and the sealing trims to ensure that the smoke and the combustion gases are not transported into the air ducting system.

12.4. BLOWER MOTOR MAINTENANCE

Periodic cleaning of the fan housing as well as fan and fan blades using a vacuum cleaner is necessary in order not to affect performance and cause overheating of the latter.

DO NOT OVERLUBRICATE.

12.5. FILTERS

Never use the furnace without air filters. To function as expected, controlled combustion wood burning appliance must be maintained on a regular basis. This means that the chimney, the gaskets and the pipes must be kept in good working order and the air filter cleaned or replaced regularly. Use the same size and type of filter as the original. High efficiency 2-ply, 3-ply, or 4-ply filters are recommended.

12.5.1. AIR FILTER DIMENSIONS

Max Caddy: 16" x 20" x 1" filter

12.6. DOOR GASKET MAINTENANCE

It is important to maintain the door gasket in good condition. After a while, the gasket might sag; a door adjustment may then be required. If the door adjustment is not sufficient, replace the door gasket with a genuine one.

12.6.1. DOOR ADJUSTMENT PROCEDURE

1. Unscrew completely the locking pin (see picture below).

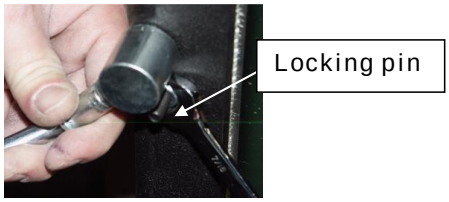

Max Caddy Owner's manual English (page 43 of 81)

2. To increase the pressure of the door on the gasket, turn the handle counter clockwise; to decrease the pressure of the door on the gasket, turn the handle clockwise until desired pressure is attained.

3. Then, screw back the locking pin about 1/4" deep and make sure you lock it in place with the nut.

13. REPLACEMENT PARTS

Your PSG furnace is designed to burn clean and requires little maintenance. It is recommended to conduct a visual inspection at least once a month to uncover any damage to the unit. Any defect must be repaired without delay using genuine PSG replacement parts. You can find a complete list of replacement parts in section 29 - EXPLODED VIEW AND PART LIST or on our website at www.caddyfurnaces.com.

13.1. DOOR GLASS

- Inspect the glass regularly to detect any glass failure. If you find any defect, stop using the wood furnace immediately. Never operate a wood furnace with a broken glass.
- If you have to change your door glass, you must use Pyroceram 3/16" (5mm) thick. Use genuine parts sold by a PSG authorized dealer.
- To replace the glass, remove the screws that hold the glass retainers in place. Removed these retainers and replace the defective glass; the glass gasket should be replace at the same time. To put back in place, reverse the procedure.
- Do not use abrasive cleanser. Special cleansers for wood fireplaces glass are available in any good hardware store or specialty hearth retailer.
- Clean glass **ONLY** when the unit has cooled down.

13.2. GASKET

We recommend replacing the gasket that seals the door once a year, in order to maintain a good control of the combustion for maximum efficiency and security. To replace your door gasket, remove the old gasket and adhesive. Clean the surface thoroughly, apply a high-temp adhesive/silicone (650 ºF) sold for that particular use, and put the new gasket onto the door. Wait for at least 4 hours before lighting your furnace.

14. TROUBLESHOOTING

When you have issues with your furnace, your first reaction may be to call technical support. This section will help you save time and money by enabling you to solve simple problems by yourself. Most common problems are generally caused by the following five factors:

1. Wrong operation or lack of maintenance;
2. Bad installation;
3. Poor quality combustible;
4. Component failure;
5. Factory defect.

The furnace is equipped with a pc board that allows the furnace to diagnose itself. It is thus important not to unplug the furnace if there is an issue with it. First, because unplugging the furnace will disable all the security features of the furnace, and second, because you will not be able to see the error code given by the furnace to understand what is the problem. It is thus important to read carefully this section before calling technical support.

The following sections will help you test each component individually and will also give you many tips in how to solve any problems related to a specific error code.

NOTE: IF YOU NEED TO CONTACT YOUR DEALER OR TECHNICAL SUPPORT, MAKE SURE TO HAVE THE MODEL OF YOUR APPLIANCE AND THE SERIAL NUMBER ON HAND. (THEY CAN BE FOUND ON THE CERTIFICATION LABEL ON THE SIDE OF THE FURNACE).

WARNING: RISK OF ELECTRIC SHOCK. IF YOU NEED TO MANUALY TEST, HANDLE OR REPLACE A COMPONENT, THE FURNACE MUST BE DISCONNECTED FROM ITS POWER SUPPLY.

Max Caddy Owner's manual English (page 44 of 81)

14.1. VALIDATING STATUS OF A COMPONENT

When using your furnace, you can validate at any time, the status of any of the following components:

- Distribution blower
- Air damper
- Temperature probe (RTD)
- Hot water system
- Humidifier
- Heat pump

14.1.1. DISTRIBUTION BLOWER

To check the status of the distribution blower, go to the main menu under “TROUBLESHOOT LINK" then go to page 5. When the fan is on, the selected speed is black.

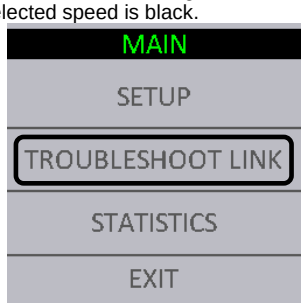

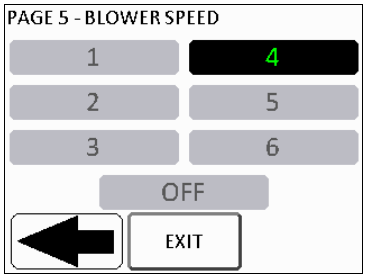

14.1.2. AIR DAMPER, HOT WATER AND HUMIDIFIER

To check the status of the air damper, hot water or humidifier, go to the main menu under "TROUBLESHOOT LINK" then go to page 3. When the furnace is in wood heating, the damper is open. The green square next to “DAMPER” should be on the left, (closed circuit). When another heating mode is on, the damper is closed, so the circuit is open and the green square is on the right. Same logic goes for the hot water and the humidifier.

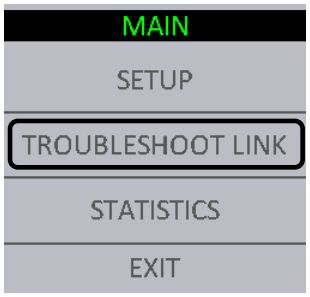

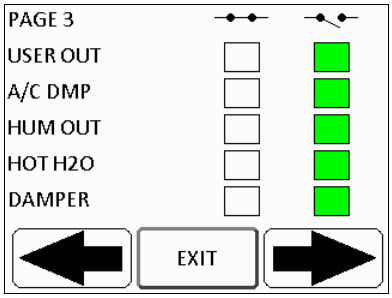

Max Caddy Owner's manual English (page 45 of 81)

14.1.3. TEMPERATURE PROBE (RTD)

The temperature probe continuously reads the temperature in the plenum and displays it on the main page in the upper right corner. If the probe fails, the error message "PLENUM OVERTEMP" will appear. See section 14.2 - MAIN ERROR CODES, POSSIBLE CAUSES AND SOLUTIONS for more information.

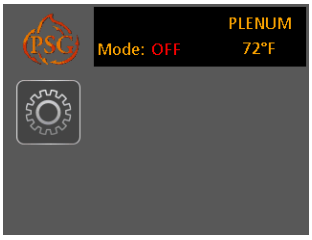

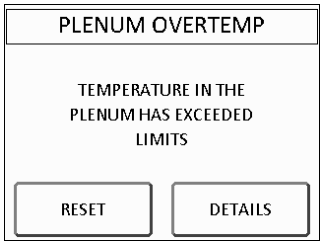

14.2. MAIN ERROR CODES, POSSIBLE CAUSES AND SOLUTIONS

This section contains main error codes, possible causes and many suggestions to guide you in resolving them. To go back to the main menu, press the RESET button.

NOTE: IF, AFTER PERFORMING ALL THE POSSIBLE SOLUTIONS MENTIONED IN THE FOLLOWING SECTION, YOU ARE STILL EXPERIENCING PROBLEMS WITH YOUR FURNACE, CALL YOUR LOCAL DEALER OR AFTER-SALE SERVICE.

NOTE: IF YOU NEED TO CONTACT YOUR DEALER OR TECHNICAL SUPPORT, MAKE SURE TO HAVE THE MODEL OF YOUR FURNACE AND THE SERIAL NUMBER ON HAND. (THEY CAN BE FOUND ON THE CERTIFICATION LABEL ON THE SIDE OF THE FURNACE).

14.2.1. UNIT OVERHEAT

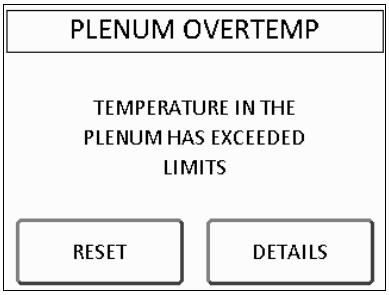

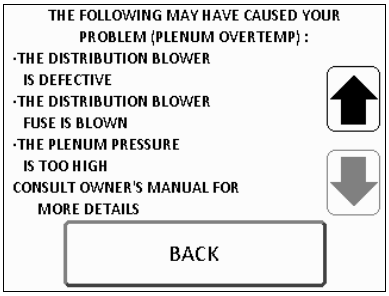

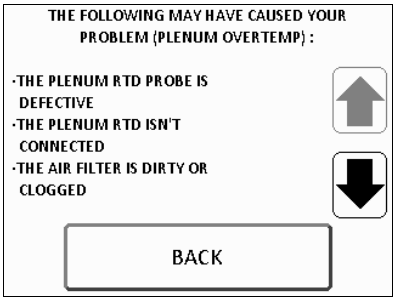

Max Caddy Owner's manual English (page 46 of 81)

The temperature probe (RTD) is disconnected or defective: If the displayed plenum temperature on the touch screen is 0 ℉ or 1140 ℉, the temperature probe is either disconnected or defective. Check the probe connection (see Section 9.4 - HOT AIR PLENUM TEMPERATURE PROBE INSTALLATION AND CONNECTION (RTD) or replace if necessary.

The air filter is dirty or clogged: Clean the furnace filter. If the filter is damaged, replace it.

The distribution fan is faulty: Check the fan status. To do this, see Section 14.1.1 - DISTRIBUTION BLOWER. Replace it if necessary.

The fuse of the distribution fan is blown: Change the 12A fuse on the power board.

The pressure in the plenum is too high: Make sure your air distribution system is well balanced and that the filter is not dirty or clogged. Ensure that returns / side vents are not blocked.

14.2.2. NO HEAT

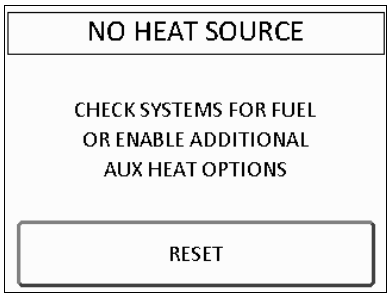

This message appears:

- When the wood furnace failed to raise the temperature in the plenum enough to reach the KIP or
- When the temperature does not reach 100 ℉ in the plenum in less than five minutes for auxiliary heat.

Make sure there is a fire in the furnace or the auxiliary heating sources are functional and well connected.

14.2.3. COMMUNICATION ERROR

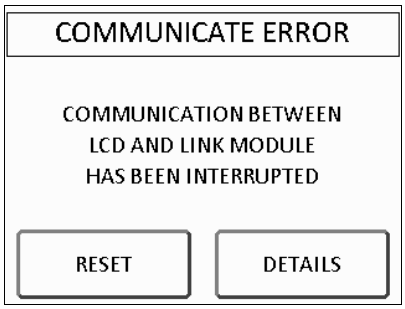

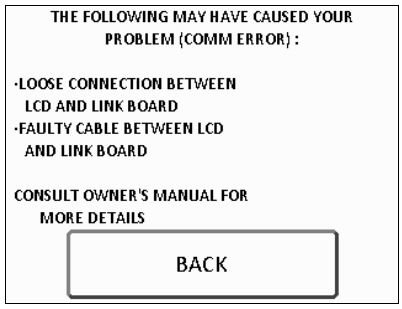

Communication error: The information from the touch screen cannot be read by the link board. It is possible that the telecommunication wire is not plugged in. Make sure each end of the wire makes good contact in the connector. It is also possible that the wire is damaged. In this case, replace it.

Max Caddy Owner's manual English (page 47 of 81)

14.2.4. SMOKE SMELL

- **Venting system leaks.** Inspect all vent connections. All vent connector joints must be sealed and fastened in accordance with the vent manufacturer's instructions to ensure consistent performance and avoid smoke and ash spillage.

- **Worn gaskets.** Gaskets may be allowing smoke spillage (doors, clean out traps, etc). Make sure that all gaskets are in good condition and replace them with original parts if necessary. Make sure the door is well adjusted.

- **Negative pressure.** A faint wood-burning odor during ignition or shut down is normal. Although, if this increases beyond what is considered normal or if you notice an unusual soot build-up on walls or furniture, check your venting system carefully for leaks and make sure all gaskets are in good condition. The furnace blower produces a negative pressure in the room. It draws air from the inside of the room, through the furnace and then outdoors. In the same manner, other appliances can also create a larger negative pressure. In this case, as the air naturally flows from a high pressure point to a low pressure point, a larger negative pressure can draw smoke from the inside of the furnace into the room. The furnace can also be affected by other mechanical ventilation systems, causing the same effect as mentioned previously. Using a fresh air intake will prevent negative pressure. Also, make sure the recommended maintenance schedule has been followed.

14.2.5. THE LCD TOUCH SCREEN DOES NOT LIGHTUP.

- **There is no electrical current going to the furnace.** Check if the furnace is connected and if there is current in the wall outlet. Check if the fuse is blown. Replace it if necessary.

- **TELCO wire is defective or not connected properly**.

- **The temperature of the screen is below zero**. When the screen is exposed to temperatures too cold, the liquid crystals may not function properly which causes a loss of communication. This situation may occur in cases where the unit has arrived from outside by a carrier or is subjected to a room temperature too low as in an unheated cottage or a very cold garage.

14.2.6. AUXILIARY OVERRIDE

This message appears when a heat signal from the existing furnace's thermostat is sent and the Max Caddy shuts itself down.

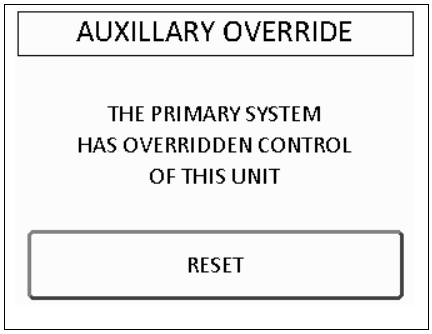

Max Caddy Owner's manual English (page 48 of 81)

15. GENERAL ELECTRICAL DIAGRAM

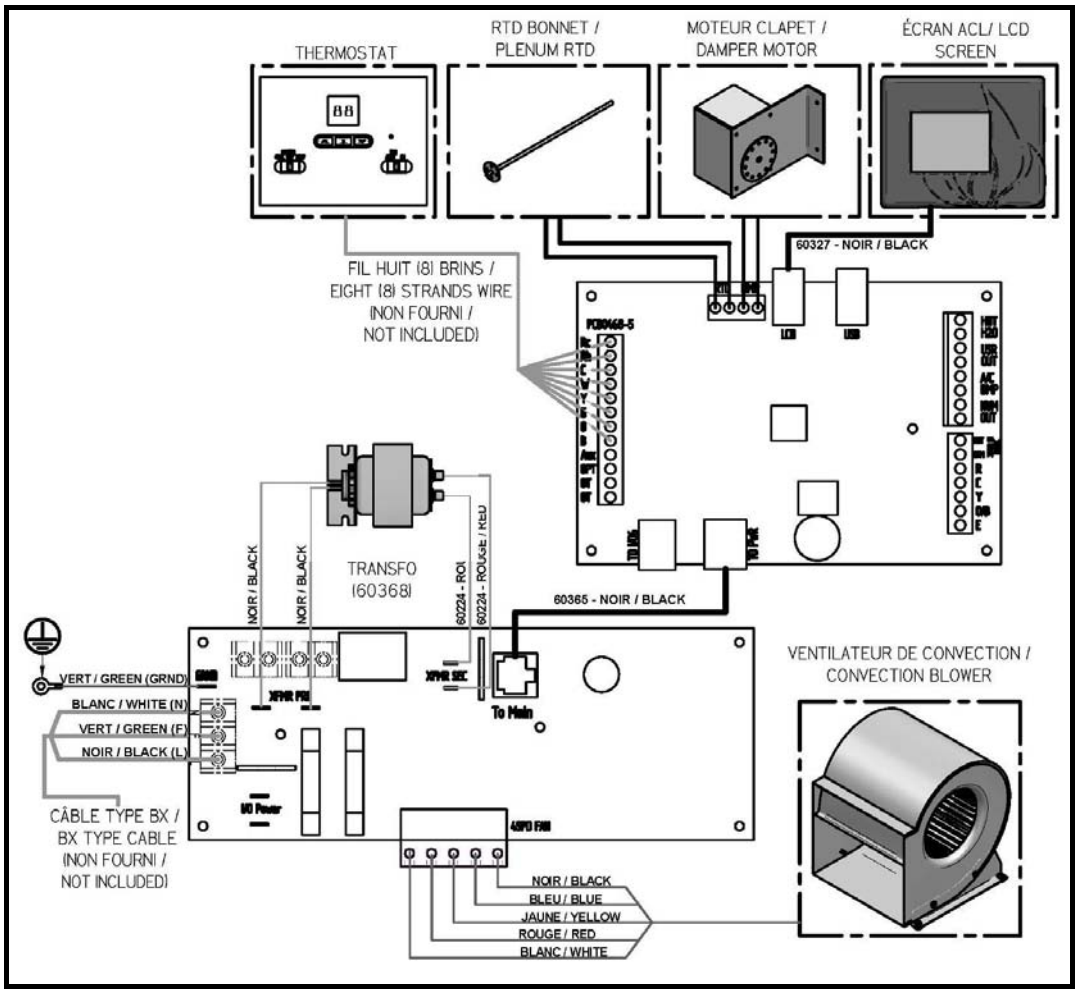

48

Max Caddy Owner's manual English (page 49 of 81)

16. ELECTRICAL DIAGRAM FOR PARALLEL FURNACE

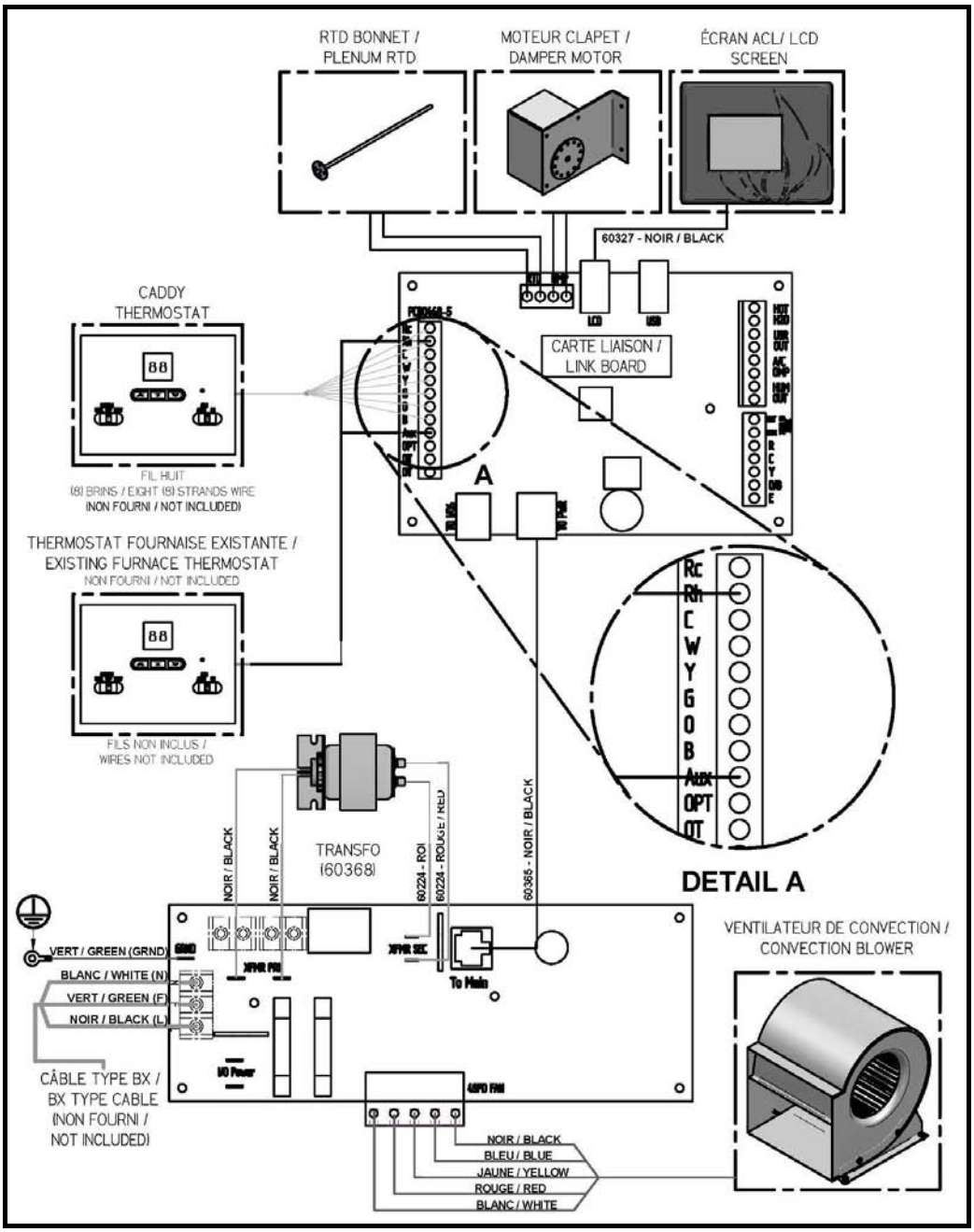

Max Caddy Owner's manual English (page 50 of 81)

17. ELECTRICAL DIAGRAM FOR ELECTRIC UNIT

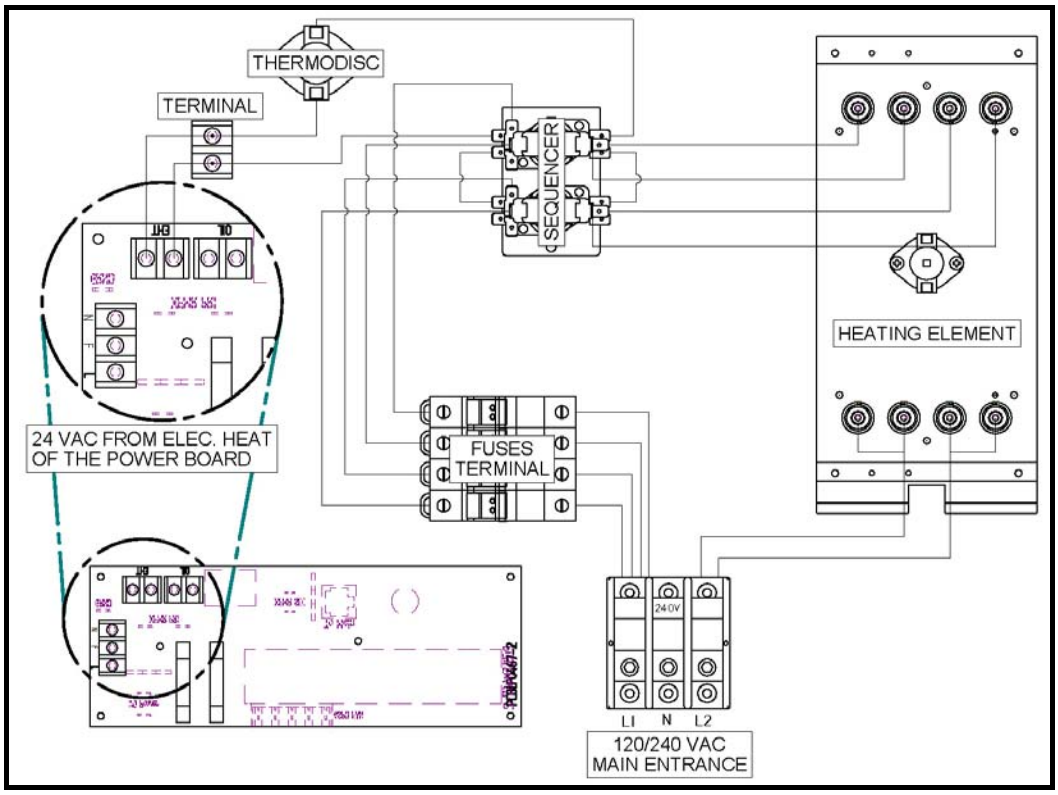

Max Caddy Owner's manual English (page 51 of 81)

INSTALLATION AND OPERATION INSTRUCTIONS FOR

WOOD/OIL COMBINATION FURNACE

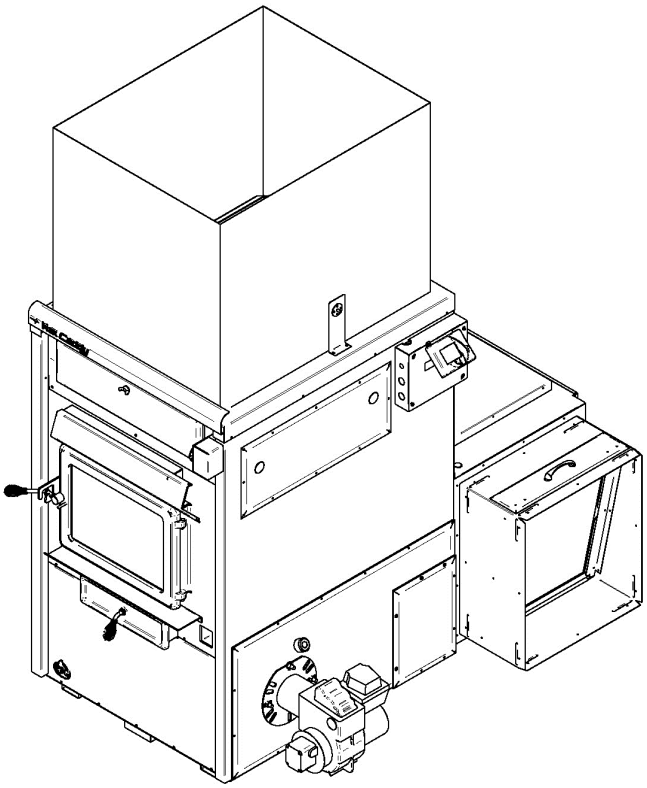

NECESSARY COMPONENTS FOR MAX CADDY WOOD/OIL COMBINATION FURNACE

To use the configuration of the Max Caddy wood/oil furnace you have to assemble the blower assembly (PA08566), sold separately. The assembly instructions are in the instruction manual supplied with the blower assembly kit.

You must also assemble the oil assembly kit. The assembly instructions are in the instruction manual supplied with the oil assembly kit (PA08512 or PA08513) sold separately.

Max Caddy Owner's manual English (page 52 of 81)

GENERAL INFORMATION FOR OIL FURNACE

READ THIS MANUAL THOROUGHLY BEFORE OPERATING THE FURNACE

CAUTION	CAUTION
EXPLOSION OR FIRE HAZARD. FOR YOUR SAFETY: DO NOT STORE OR USE GASOLINE OR ANY FLAMMABLE LIQUIDS OR VAPORS IN THE VICINITY OF THIS HEATING UNIT.	DO NOT ATTEMPT TO LIGHT THE BURNER WHEN EXCESS OIL HAS ACCUMULATED, WHEN THE APPLIANCE IS FULL OF VAPOR, OR WHEN THE COMBUSTION CHAMBER IS VERY HOT.

DO NOT BURN WASTE OR PAPER IN THE APPLIANCE.
DO NOT LEAVE PAPER OR ANY COMBUSTIBLE MATERIAL AROUND THE APPLIANCE.

WARNING: INSTALL THE NOZZLE. ADJUST THE ELECTRODES. ADJUST PRESSION.

NOTE: IF A PROBLEM RESULTS FROM IMPROPER INSTALLATION, NO PRODUCT WARRANTY WILL BE VALID.

DO NOT TRY TO MODIFY THE UNIT OR ITS COMMANDS – CALL A TECHNICIAN.

PLEASE SAVE THIS DOCUMENT!

Max Caddy Owner's manual English (page 53 of 81)

18. GENERAL NOTES

This instructions manual treats mainly of the oil burning unit of your wood/oil combination furnace.

To obtain the maximum efficiency out of your furnace, follow the advice below regarding the installation and operation of your WOOD/OIL combination furnace.

- Respect the local codes (when in doubt, consult your local dealer).
- Respect the clearances indicated on this instructions manual and make sure that they match those indicated on the appliance's certification label;
- Make sure that your furnace is installed in conformity with the instructions on the certification label;
- All the controls adjustments must be performed by a qualified technician.

WARNING

THE INSTALLATION OF THE WOOD/OIL COMBINATION FURNACE MUST BE DONE IN ACCORDANCE WITH THE RULES OF THE AUTHORITIES HAVING JURISDICTION AND THE CAN/CSA B-139 M-91 STANDARD FOR OIL BURNING HEATING APPLIANCES.

WARNING

OIL BURNING FURNACES ARE NOT APPROVED FOR USE WITH COMBUSTIBLE HEAVIER THAN NO.2 OIL (FURNACE OIL). DO NOT USE GASOLINE, TRANSMISSION OIL, OR OTHER TYPE OF OIL CONTAINING GASOLINE.

WARNING

FOR INSTALLATION IN WOOD/OIL CONFIGURATION, YOU MUST USE OF A 7" CHIMNEY. A 7" TO 6" REDUCER MUST BE INSTALLED AT THE FLUE OUTLET OF THE FURNACE.

19. DRAFT AND CHIMNEY

The chimney must conform to the rules of the authorities having jurisdiction and the CAN/CSA B139 & NFPA 31 standard regarding installation of oil burning heating appliances. The installation of the connecting pipes to the oil unit must be done and approved by a professional.

NOTE: The barometric damper provided with the appliance must be properly installed on the flue pipe of the oil burning unit. The purpose of the damper is to adjust the draft in the evacuation pipe of the oil burning unit to the recommended level. Since the evacuation pipe of the oil burning unit is connected on the evacuation pipe of the wood burning furnace, the minimum draft to be respected is 0.04 IN.W.C. in the evacuation pipe of the wood burning side, at all times. In fact, a barometric damper that would be opened too wide could cause an important loss of draft in the evacuation pipe of the wood burning furnace.

20. OIL TANK AND PIPING

The maximum capacity of the tank must not exceed 200 imperial gallons (900 liters) and the tank must be located at least 60" from the burner (a 24-inche distance is however recommended for maintenance). Local codes will govern the size of the air inlets and filling openings as well as the type of plugs to be used. 1 1/4" IPS and 2" IPS are usually accepted as minimum dimensions for the air intake pipes and fill pipes, respectively. The oil line to the burner must be a 3/8" outside diameter copper tubing for runs up to 50 feet, and 1/2" outside diameter for longer runs. A manual shut-off valve and an oil filter shall follow in sequence on the oil line between the oil tank and the burner. The oil line must be buried or protected adequately to avoid any damage.

21. BURNER PUMP

When the tank is located below the unit, the basic single course pump, powered by a single duct, can compensate for a drop of 8 feet (244 cm) measured between tank outlet and the height of entry into the burner.

When the rise is more than 8 feet (244 cm) and not exceeding 10 feet (305 cm), a by-pass plug (provided with the burner) must be inserted in the pump and an oil return pipe must be installed. ***For more details, see "INSTALLATION INFORMATIONS", Part No. 21844 on the burner pump.***

If the rise is higher than 10 feet (305 cm), a two stage pump may be required along with an oil return pipe.

Max Caddy Owner's manual English (page 54 of 81)

22. APPLIANCE INSTALLATION

A Blocked Vent Switch is mandatory for installation with an oil fired appliance that normally operates with its vent system under a negative pressure. This device is intended to detect a blocked vent system, responds to hot flue gases backing up through its heat transfer tube, and can be wired to shut off the oil burner. It requires manual resetting.

22.1. UNIT LOCATION

See Section 9.6 - UNIT LOCATION for more details regarding the unit location.

22.2. PARALLEL INSTALLATION

See Section 9.13 - PARALLEL INSTALLATION

22.3. MINIMUM CLEARANCES TO COMBUSTIBLE MATERIALS

N.B. This appliance must be installed in conformity with the instructions on the certification label.

THE INSTALLATION OF THE HEAT SHIELD (-1-) PROVIDED WITH THE FURNACE IS MANDATORY.

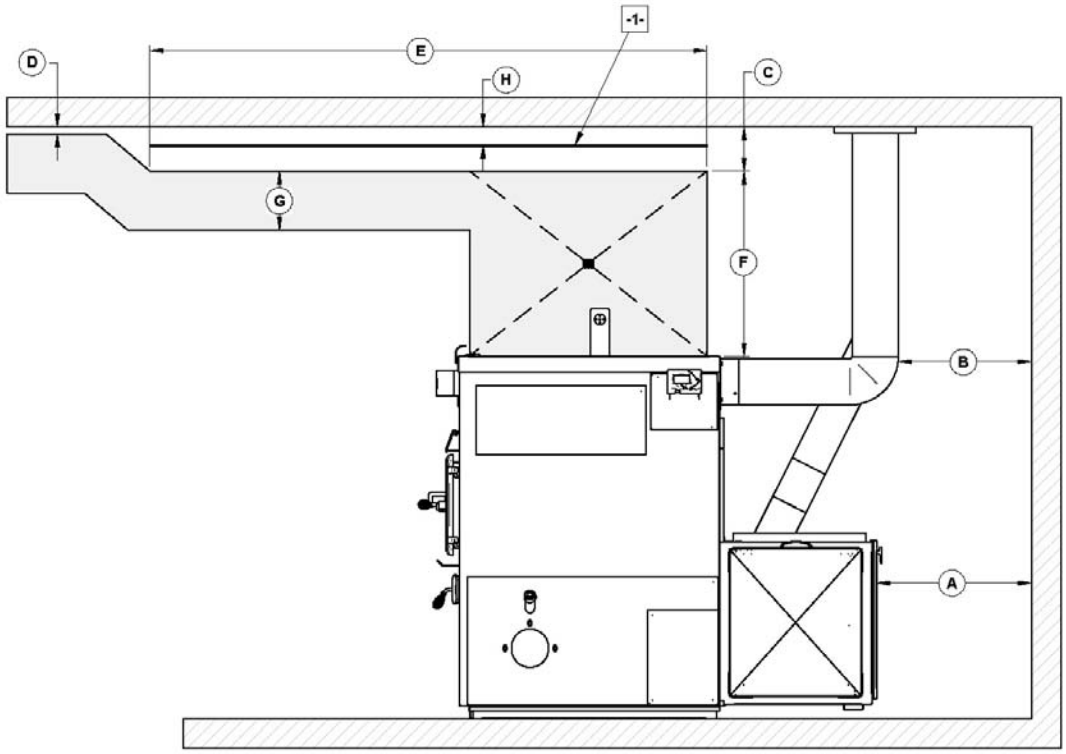

Max Caddy Owner's manual English (page 55 of 81)

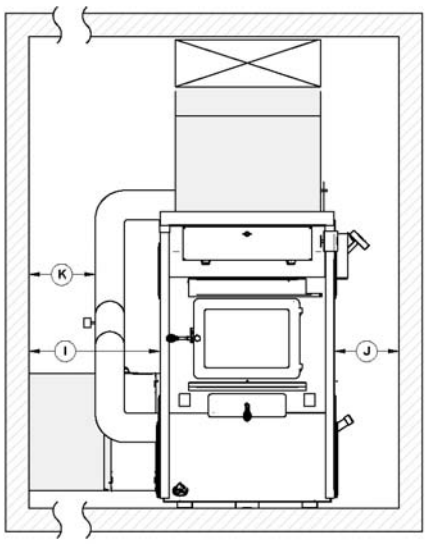

MIMINUM CLEARANCES			
A	24" (610 mm)	**G**	8" (203 mm)
B	18" (457 mm)	**H**	1.5" (mm)
C	6" (152 mm)	**I**	24" (610mm)
D	1" (25 mm)	**J**	24" (610mm)
E	72" (1829 mm)	**K**	9" (229mm)
F	24" (610 mm)		
-1-	**HEAT SHIELD**		

22.4. FLOOR PROTECTION

See Section 9.7.4 - FLOOR PROTECTION

22.5. HOT AIR PLENUM

See Section 9.12 - HOT AIR PLENUM

22.6. CONNECTING PIPE AND MANUAL DAMPER

The pipe connecting the furnace to the chimney must be as short and as straight as possible. If a deviation is required, the use of 45° elbows is highly recommended for a better evacuation of the smoke in the chimney of the wood burning furnace. The barometric damper provided with the appliance must be installed on the oil unit evacuation pipe, approximately 24" from the flue outlet of the unit.

TYPE OF FURNACE	OIL BURNING UNIT FLUE PIPE DIAMETER
MAX CADDY	5"

Max Caddy Owner's manual English (page 56 of 81)

22.7. DIFFERENT INSTALLATION

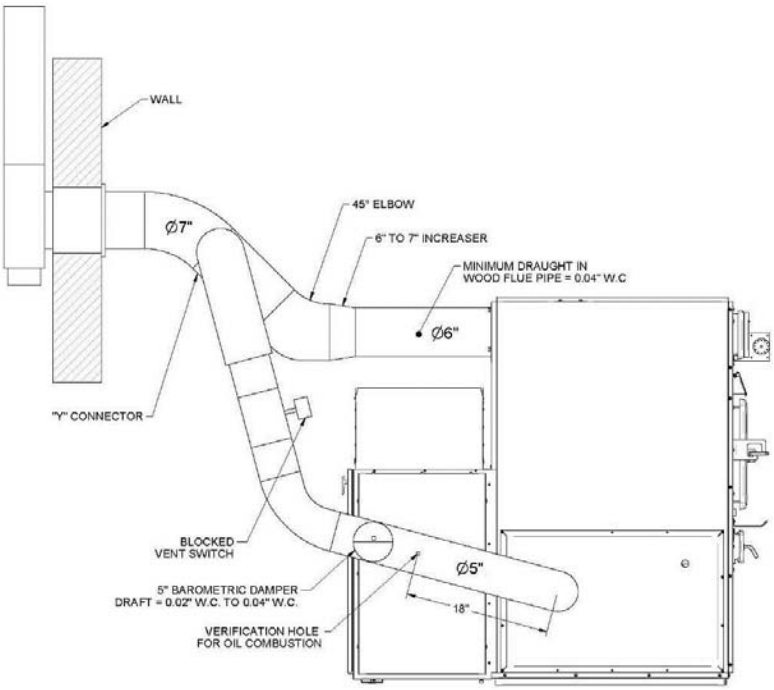

Max Caddy Owner's manual English (page 57 of 81)

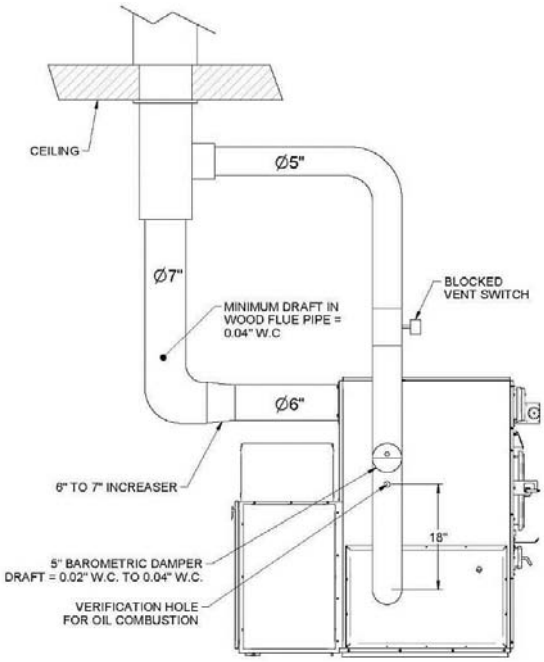

22.8. COMBUSTION AIR

See Section 9.11 - COMBUSTION AIR AND FRESH AIR INTAKE ADAPTER INSTALLATION (OPTIONAL)

22.9. ELECTRICAL WIRING

See Section 9.9 - ELECTRICAL CONNECTIONS

22.10. THERMOSTAT

See Section 10 - THERMOSTAT INSTALLATION

23. OPERATION INSTRUCTION

23.1. FAN SPEED CONTROL

See Section 11.5 - DISTRIBUTION BLOWER SPEED CONFIGURATION

23.2. COMBUSTION SAFETY CONTROL

The AFG type oil burner is equipped with an electronic control including a pre-purge function and a new, more durable drive motor.

23.3. PRE-PURGE

When there is a call for heat, the burner's fan will run for 15 seconds before the actual ignition takes place to vent the combustion chamber and generate a proper draft. This will result in a smoother ignition of the oil burner.

23.4. SAFE OPERATION

If the flame goes out while the burner is running, the control will then switch to the "RECYCLE" mode and cut the fuel supply to the burner for 60 seconds. After this delay, the control goes back to "IGNITION" mode. If the flame goes out 3 times in a row, the control will switch to the "LOCKOUT" mode to prevent a continuous cycling of the ignition process,

Max Caddy Owner's manual English (page 58 of 81)

which would cause a premature soot-up of the combustion chamber and smoke pipe. To deactivate the “LOCKOUT” mode, press and hold the reset button of the control for 30 seconds.
A green diagnostic light on the control has four states:

- On = Flame present
- Off = No flame
- 2 seconds On, 2 seconds Off = "Recycle" mode
- 1/2 second On, 1/2 second Off = "Lockout" mode TEMPORARY SHUT-OFF

23.5. TEMPORARY DISENGAGEMENT OF THE BURNER

By pressing and holding the reset button, the burner will shut-off until the reset button is released. When the button is released, the control will start over at the beginning of the normal cycle.

FOR ADDITIONAL INFORMATIONS ON OPERATION SEQUENCES OF THE BURNER, CONSULT THE BURNER INSTRUCTION MANUAL.

Max Caddy Owner's manual English (page 59 of 81)

23.6. COMBUSTION ADJUSTMENT AND VERIFICATION

To enjoy the efficiency of our oil burning units, you must respect the following criterion:

Oil burning units must be connected to flue pipes having at all times a sufficient draft to ensure an efficient and safe operation of unit.

Before turning on the oil unit, make sure that the sealed vision cap (SE53352) is installed and secured on the vision tube with the screw provided. The chamber is calibrated so that there is a slight positive pressure, which optimizes the efficiency of combustion. The presence of the sealed vision cap thus prevents the return of oil odor.

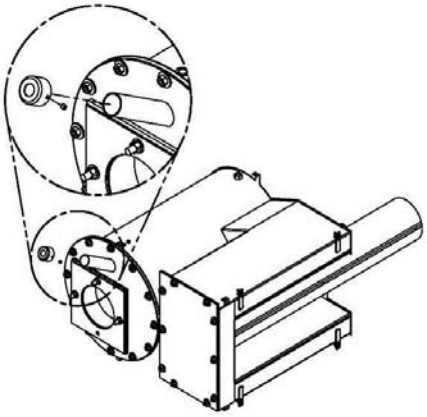

CHECK LIST:

- SELECTION OF NOZZLE AND HEAD
- NOZZLE / ELECTRODES POSITION IN RELATION TO THE HEAD
- PUMP PRESSURE
- OIL LINE IS BLEED.
- FAN SPEED
- BAROMETRIC DAMPER POSITION

TOOLS REQUIRED:

- DRAFT GAUGE
- SMOKE TESTER
- PUMP PRESSURE GAUGE
- NOZZLE AND ELECTRODES POSITION TESTER
- COMBUSTION TESTER

23.6.1. COMBUSTION VERIFICATION PROCEDURE:

A- DRILL A 9/32" DIAMETER HOLE IN THE EVACUATION PIPE APPROXIMATELY 18" FROM THE OUTLET.

B- CLOSE THE DOOR AND THE AIR INTAKE(S) OF THE WOOD BURNING FURNACE.

C- LIGHT THE BURNER FOR AT LEAST 10 TO 15 MINUTES.

D- OVER THE FIRE DRAFT = 0.01 TO 0.02 IN.W.C. (THE DRAFT OVER THE FIRE MUST BE MEASURED BY THE SCEALED CAP OF THE VISION TUBE'S PULSATION TRAP).

E- SMOKE TEST BETWEEN 0 AND 1 ON THE SHELL BACHARACH SCALE (TRACES).

F- DRAFT IN THE CHIMNEY = 0.02 IN.W.C.

G- PERCENTAGE OF EXCESS AIR = 20 TO 40%, 12% CO2, 5% O_2.

H- AVERAGE EFFICIENCY OF 83% TO 87% BASED ON THE TYPE OF BURNER AND ITS INPUT (SEE SECTION 24.1 - UH –MAX CADDY.

I- BURNER'S AIR ADJUSTEMENT: 0-7. TIGHTEN ALL THE LOCKING SCREWS AFTER COMPLETING THE FINAL ADJUSTMENT.

N.B. The barometric damper provided with the appliance must be properly installed on the flue pipe of the oil burning unit. The purpose of the damper is to adjust the draft in the evacuation pipe of the oil burning unit to the recommended level. Since the evacuation pipe of the oil burning unit is connected on the evacuation pipe of the wood burning furnace, the minimum draft to be respected is 0.04 IN.W.C. in the evacuation pipe of the wood burning side, at all times. ***In fact, a barometric damper that would be opened too wide could cause an important loss of draft in the evacuation pipe of the wood burning furnace.***

Max Caddy Owner's manual English (page 60 of 81)

23.6.2. ELECTRODES SETTING

The electrodes must be adjusted by a qualified technician. A proper positioning of the electrodes is important to get an efficient lighting of the oil.

ELECTRODE SETTING FOR "F" HEAD

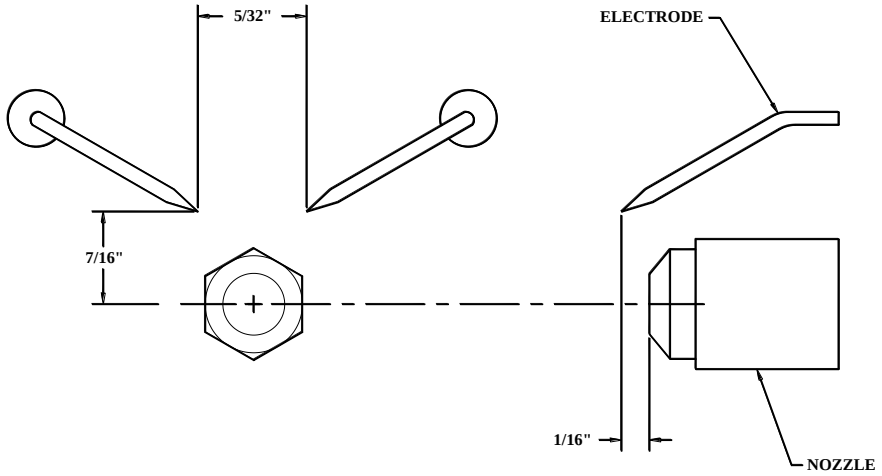

WARNING:

1. **REFER TO THE RATING PLATE FOR THE PUMP PRESSURE AND THE NOZZLE TYPE.**
2. **REFER TO THE OIL BURNER'S INSTRUCTIONS MANUAL FOR DETAILS ON THE PUMP.**
3. **FOR ELECTRODES SETTING, SEE THE OIL BURNER'S MANUAL.**
4. **FOR THE START-UP AND ADJUSTMENT OF THE BURNER, SEE OIL BURNER'S INSTRUCTION MANUAL.**
5. **THE BURNER WILL PROVIDE YEARS OF EFFICIENT OPERATION IF IT IS PROFESSIONALLY INSTALLED AND MAINTAINED BY A QUALIFIED SERVICE TECHNICIAN. IF AT ANY TIME THE BURNER DOES NOT APPEAR TO BE OPERATING PROPERLY, IMMEDIATELY CONTACT YOUR QUALIFIED SERVICE AGENCY FOR CONSULTATION.**
6. **FOR MORE DETAILS ABOUT THE BURNER, REFER TO THE BURNER'S MANUAL.**

Max Caddy Owner's manual English (page 61 of 81)

23.7. APPLIANCE START-UP

The start-up must be performed by a qualified technician. Make sure the installation is completed and the oil tank has been filled up. The oil line must also have been purged.

CAUTION: CLOSE THE BLOWER COMPARTMENT ACCESS PANEL BEFORE STARTING THE BURNER.

23.8. PROLONGED CLOSING

A) Cut off the electric circuit
B) Close the oil shut-off valve

NOTE: THE SHUT-OFF VALVE MUST BE CLOSED WHEN THE APPLIANCE IS OUT OF SERVICE FOR A PROLONGED PERIOD OF TIME.

24. TECHNICAL DATA

24.1. UH –MAX CADDY

MODEL	BURNER TYPE	BTU INPUT	NOZZLE	FLOW	HEAD	STATIC PLATE	PRESSURE AT THE PUMP	H.P. FAN MOTOR	TUBULATOR ADJUSTMENT	AIR ADJUSTMENT	EFFICIENCY
UH–MAX CADDY	BECKETT AFG	91,000	0.65, 70°W (DELAVAN)	0.65 GAL US/H (2.46 L-H)	F0	---	100 PSI (690 kPa)	1/2	---	0/7	85%
UH–MAX CADDY	BECKETT AFG	120,000	0.65, 70°W (DELAVAN)	0.86 GAL US/H (3.26 L-H)	F0	---	175 PSI (1205 kPa)	1/2	---	1/6	83%
UH–MAX CADDY	RIELLO 40 F3	91,000	0.50, 70°W (DELAVAN)	0.60 GAL US/H (2.27 L-H)	---	---	150 PSI (1035 kPa)	1/2	1	2.5	87%
UH–MAX CADDY	RIELLO 40 F3	120,000	0.65, 70°W (DELAVAN)	0.84 GAL US/H (3.18 L-H)	---	---	165 PSI (1135 kPa)	1/2	1	2.5	85%

For any additional information, consult the rating plate on the left hand side of the appliance.

25. MAINTENANCE

At the beginning of heating season, have the complete installation inspected by a qualified service man, especially the lighting system and the controls.

NOTE: THE UNIT'S MAINTENANCE, REPAIRS AND THE CLEANING OF THE OIL FILTER MUST BE DONE BY A QUALIFIED TECHNICIAN.

25.1. MAINTENANCE

WARNING: TURN OFF ELECTRIC POWER SUPPLY BEFORE SERVICING THE UNIT.

1. The furnace, the burner and the flue pipe should be cleaned at least once a year.
2. The nozzle should be inspected and replaced if needed.
3. Handle the nozzle with care to avoid damaging its surface.
4. The electrodes should be adjusted as indicated in the burner manual.
5. Lubricate the burner motor bearings twice a year. (2 or 3 drops of SAE 20 non detergent lubricating oil).
6. The oil filter should be verified annually and replaced if needed.

Max Caddy Owner's manual English (page 62 of 81)

25.2. SERVICE

Before calling for service, first check the following

- Fuel supply
- Electric fuses or breakers
- Thermostat setting
- PC board settings
- The state of the green diagnostic LED on the burner control.

Burner no.: _____ Model: _____ Date of installation: _____

Service telephone no.: Day: _____ Night: _____

Dealer's name and address: _____

TEST REPORT :

CO_2 _____% Temp. at stack: _____ Draft at stack: _____IN.W.C.

Nozzle output: _____ GPH Smoke colour: _____

Inspected by : _____

25.3. FILTERS

See Section 12.5 - FILTERS

Max Caddy Owner's manual English (page 63 of 81)

26. ELECTRICAL DIAGRAM BECKETT OIL UNIT

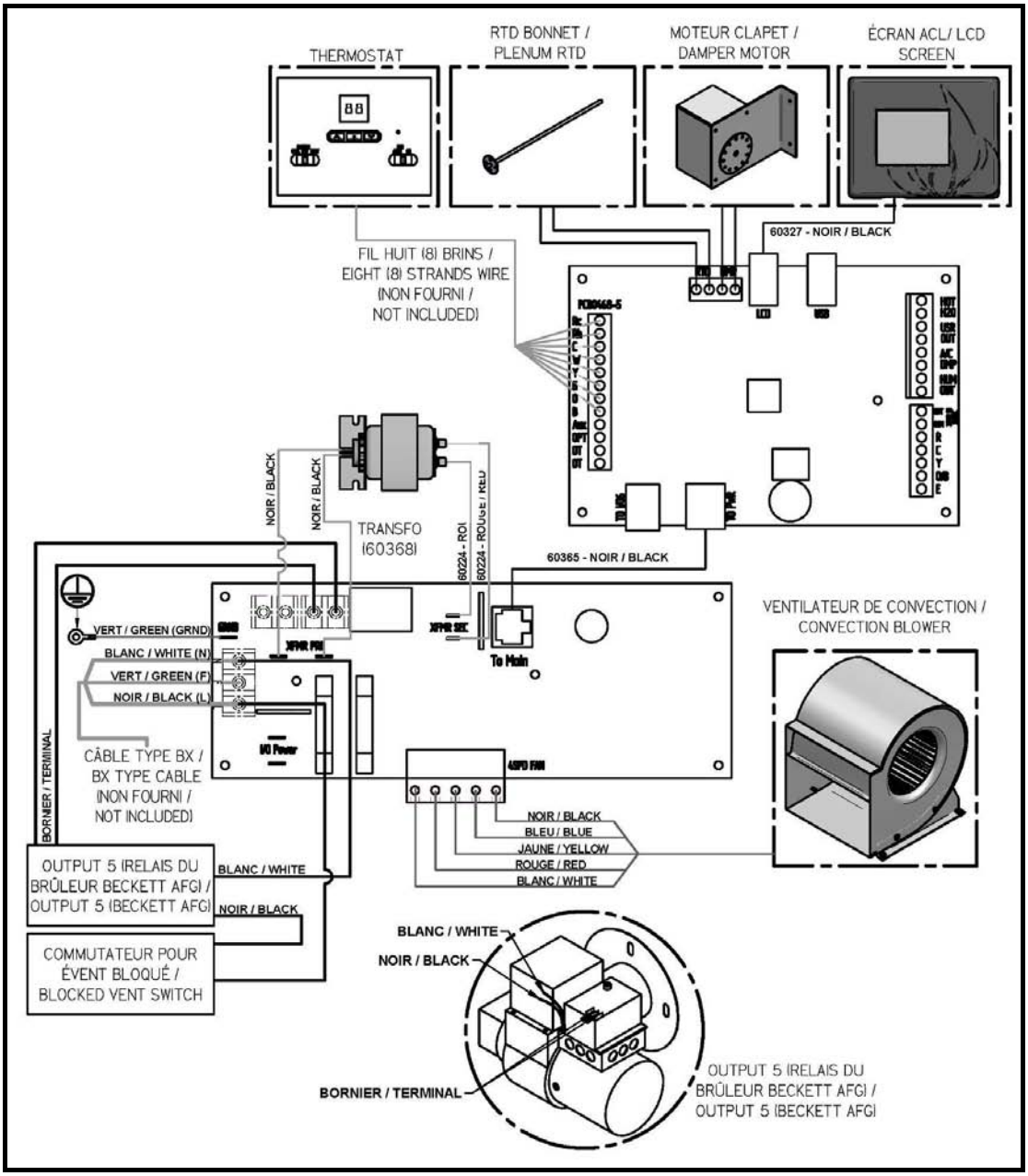

63

Max Caddy Owner's manual English (page 64 of 81)

27. ELECTRICAL DIAGRAM RIELLO OIL UNIT

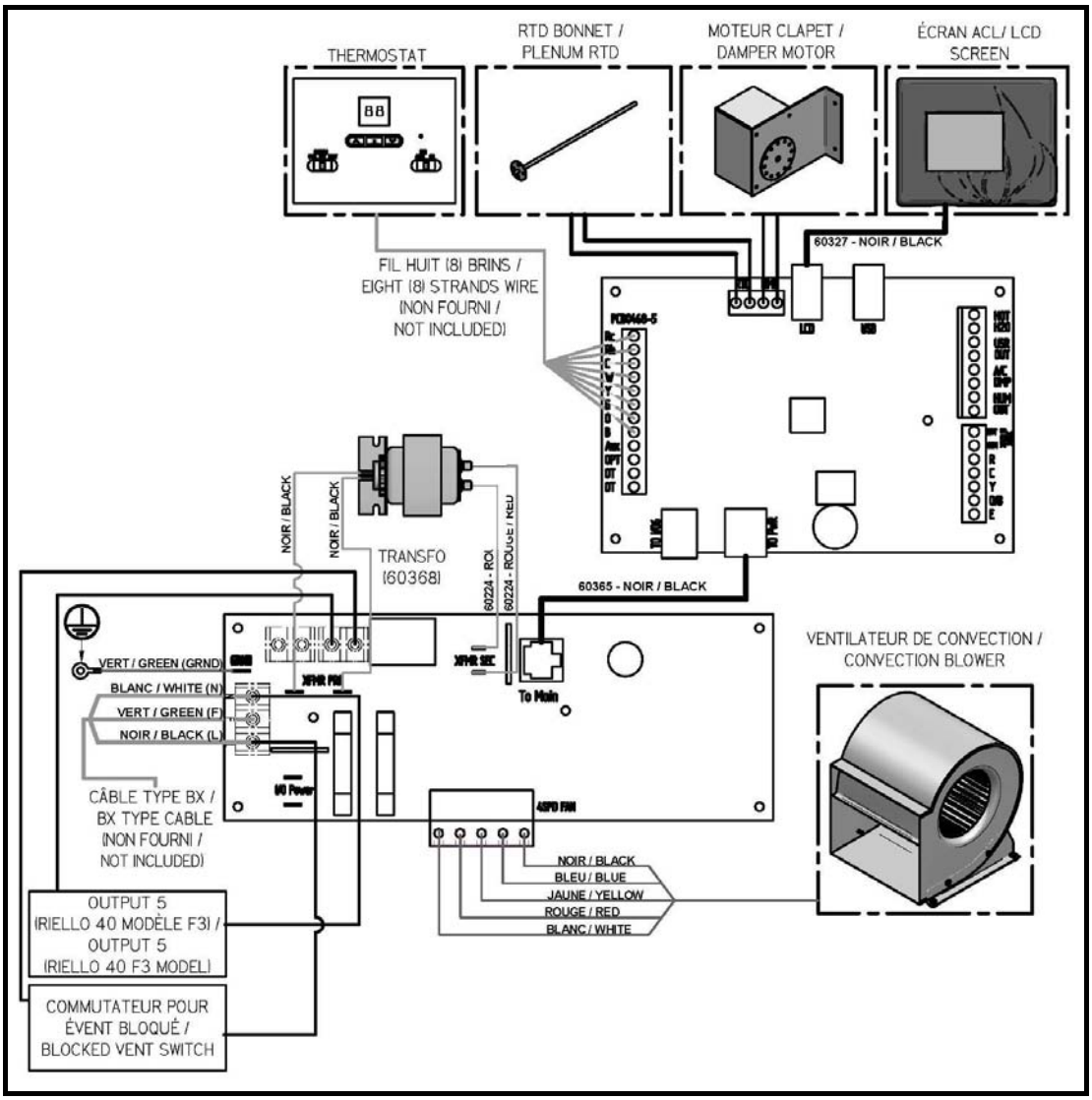

64

Max Caddy Owner's manual English (page 65 of 81)

28. LINK BOARD OPTIONS CONNECTIONS

28.1. ELECTRICAL CONSUMPTION

Your Max Caddy furnace is able to supply electrical 24V current to control various options. The options that can be supported are described in the table below. The maximum available 24V current is 1.66 amps (transformer 24V @ 40VA). The table below shows the approximate electrical consumption of each of the options that can be installed with your Max Caddy furnace. It is important to note that those consumptions were determined according to the maximum consumption of the options tested by the manufacturer. It is possible to find on the market options having higher or lower electrical consumption than those shown in the table below. In the event that the combined electrical consumption of the installed options is higher than 1.66 amps, contact our technical support for further information.

WARNING: INCORRECT WIRING CAN DAMAGE THE LINK BOARD.

Option	Approximate consumption (mA)
Additional 24V equipment	500
Air conditioning damper	500
Humidifier	500
Heat pump	Current supply via additional transformer (not provided)
Thermostat (if not battery powered)	500

* It is important that the sum of the electrical consumption of the installed options is not higher than 1.66 amps.

28.2. OUTDOOR PROBE

* The outdoor probe act as a switch therefore it does not consumes electrical current.

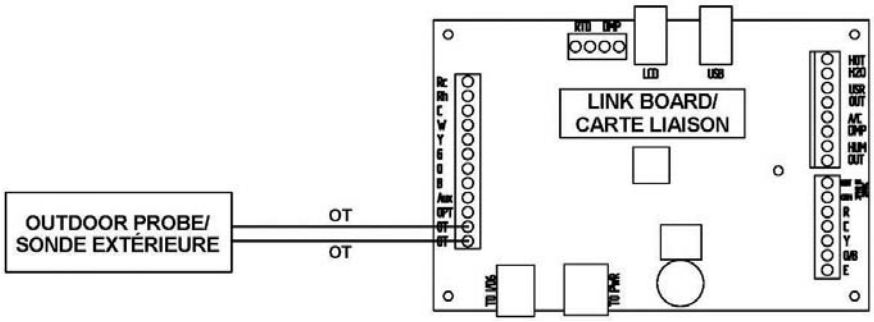

28.3. HOT WATER

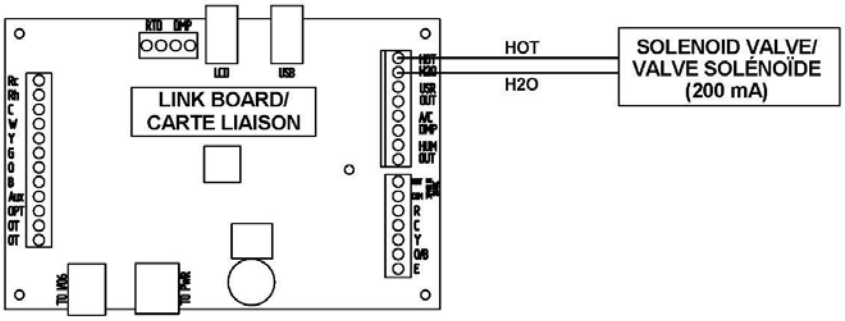

Max Caddy Owner's manual English (page 66 of 81)

28.4. 24V ADDITIONNAL EQUIPMENT

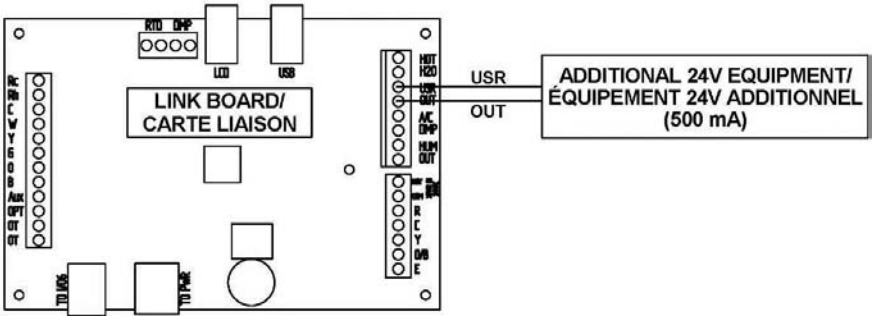

28.5. AIR CONDITIONNING DAMPER

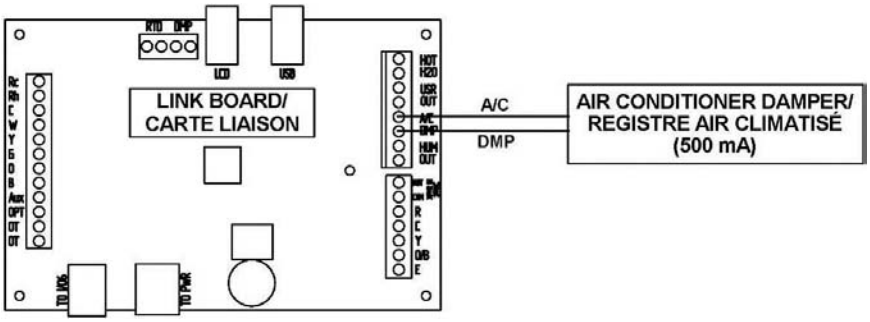

28.6. HUMIDIFIER

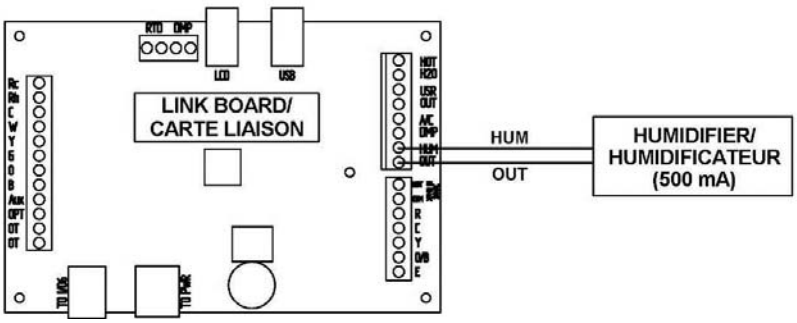

Max Caddy Owner's manual English (page 67 of 81)

28.7. HEAT PUMP

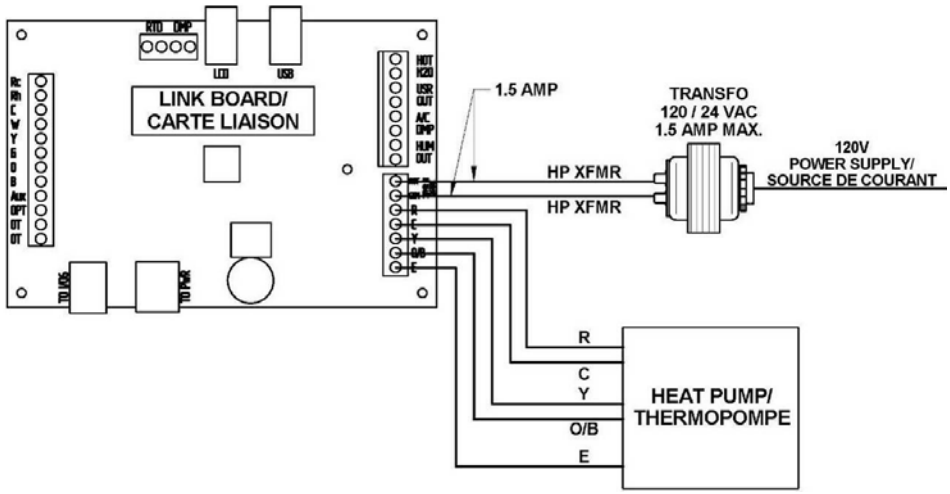

29. EXPLODED VIEW AND PART LIST

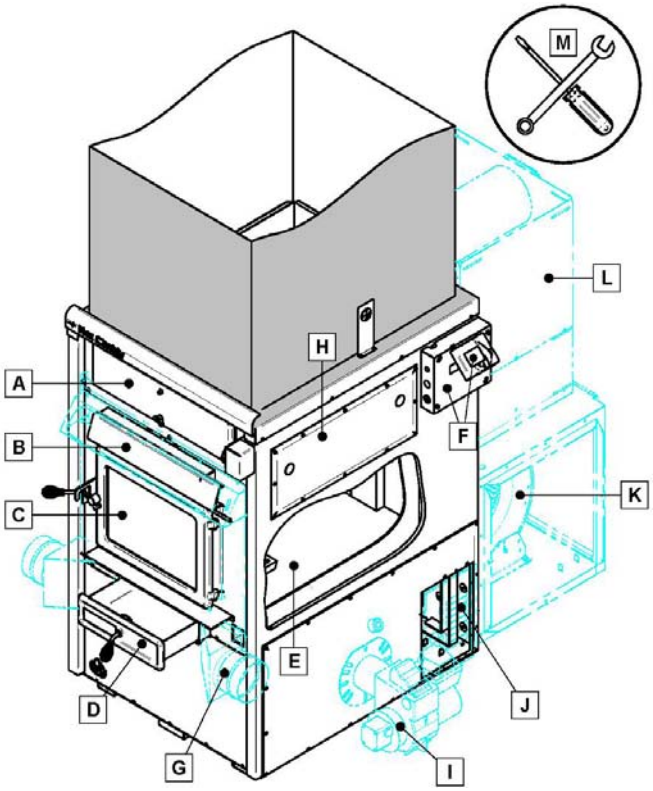

Max Caddy Owner's manual English (page 68 of 81)

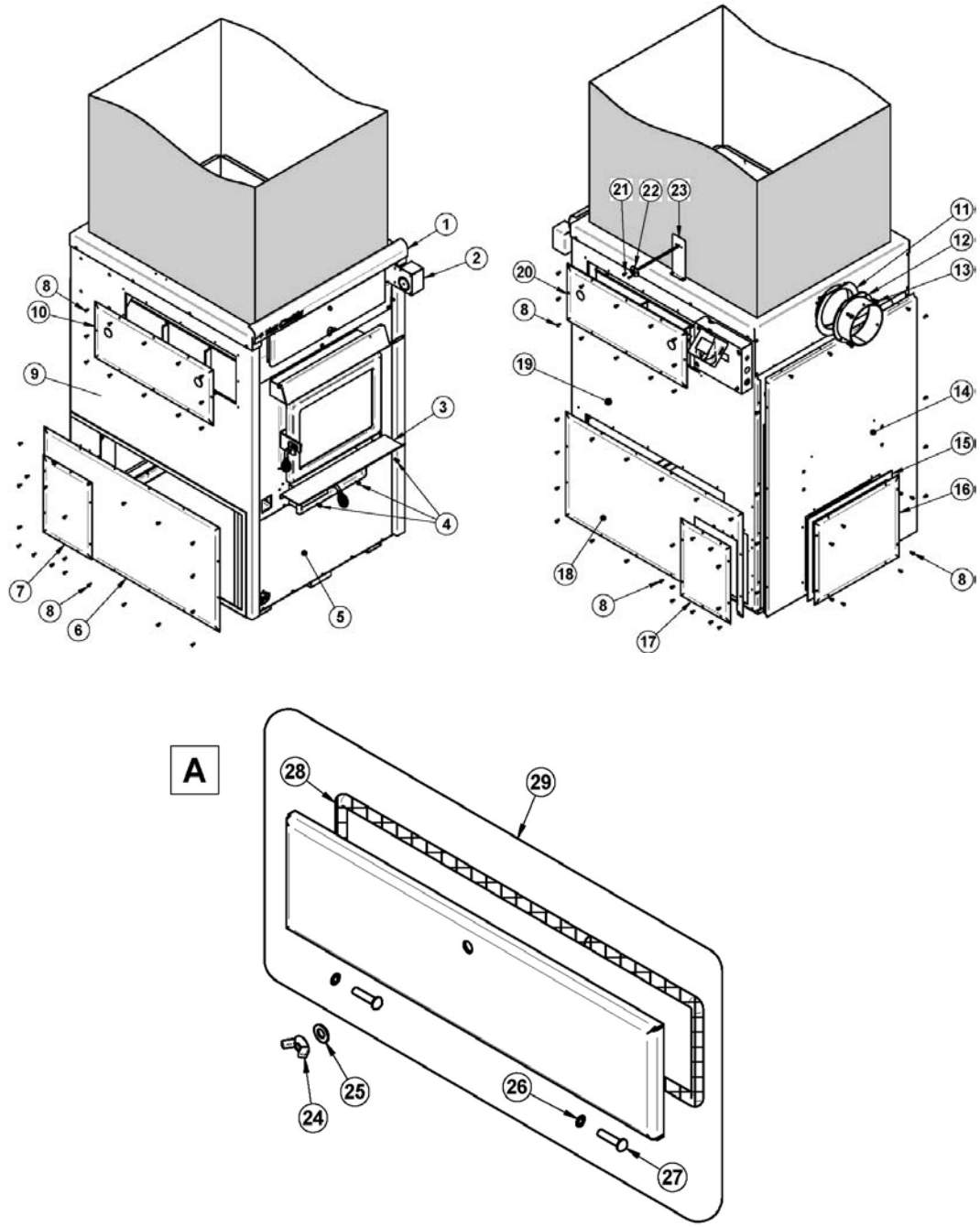

68

Max Caddy Owner's manual English (page 69 of 81)

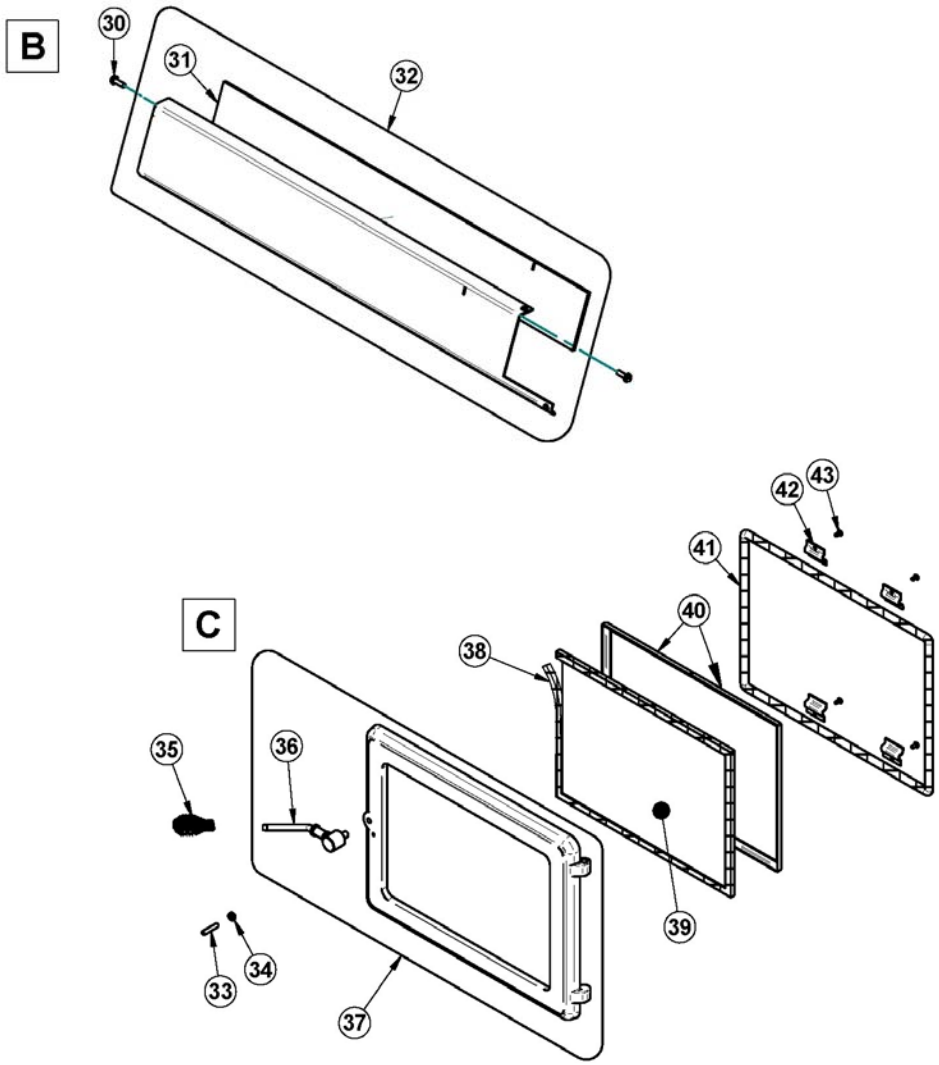

Max Caddy Owner's manual English (page 70 of 81)

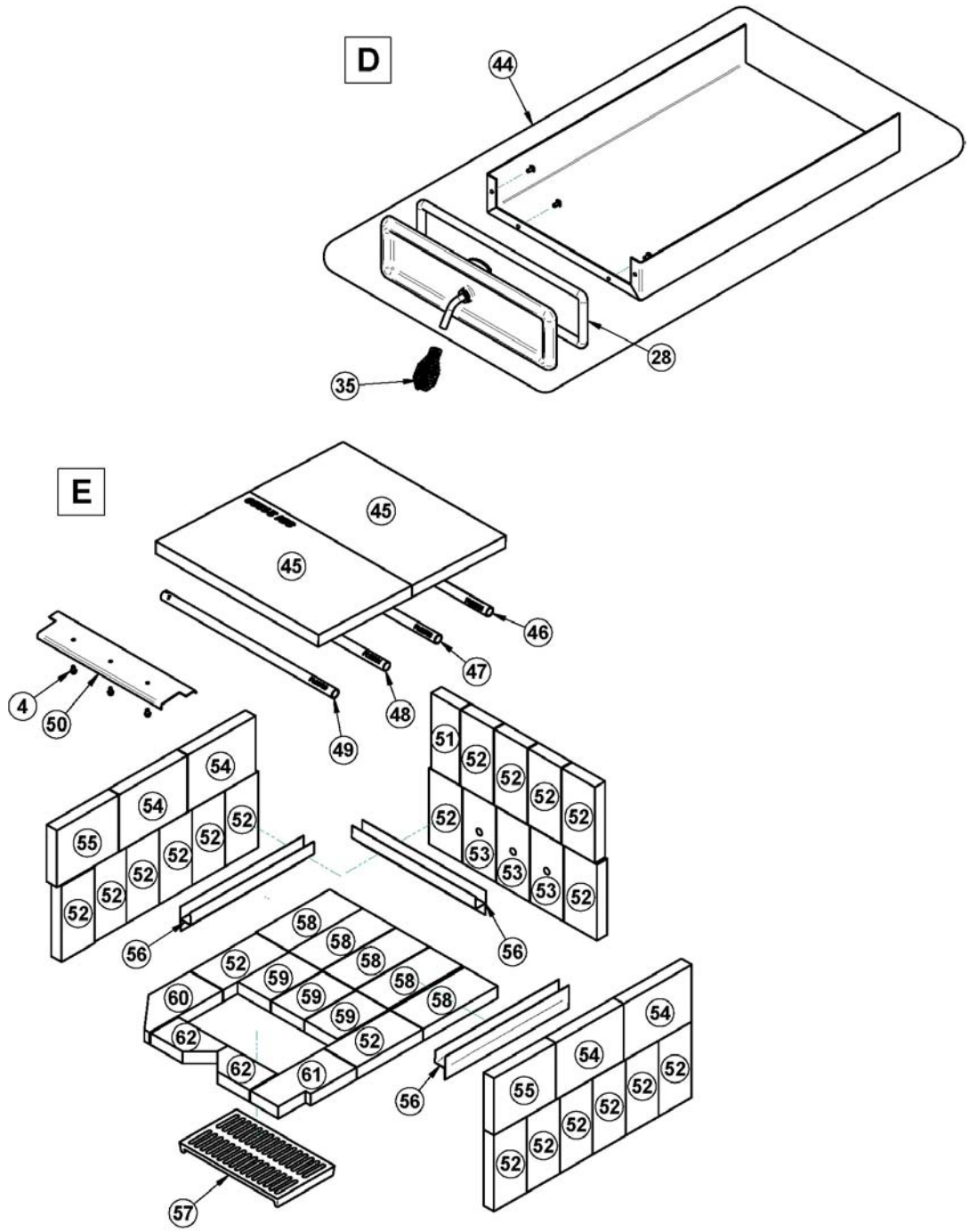

70

Max Caddy Owner's manual English (page 71 of 81)

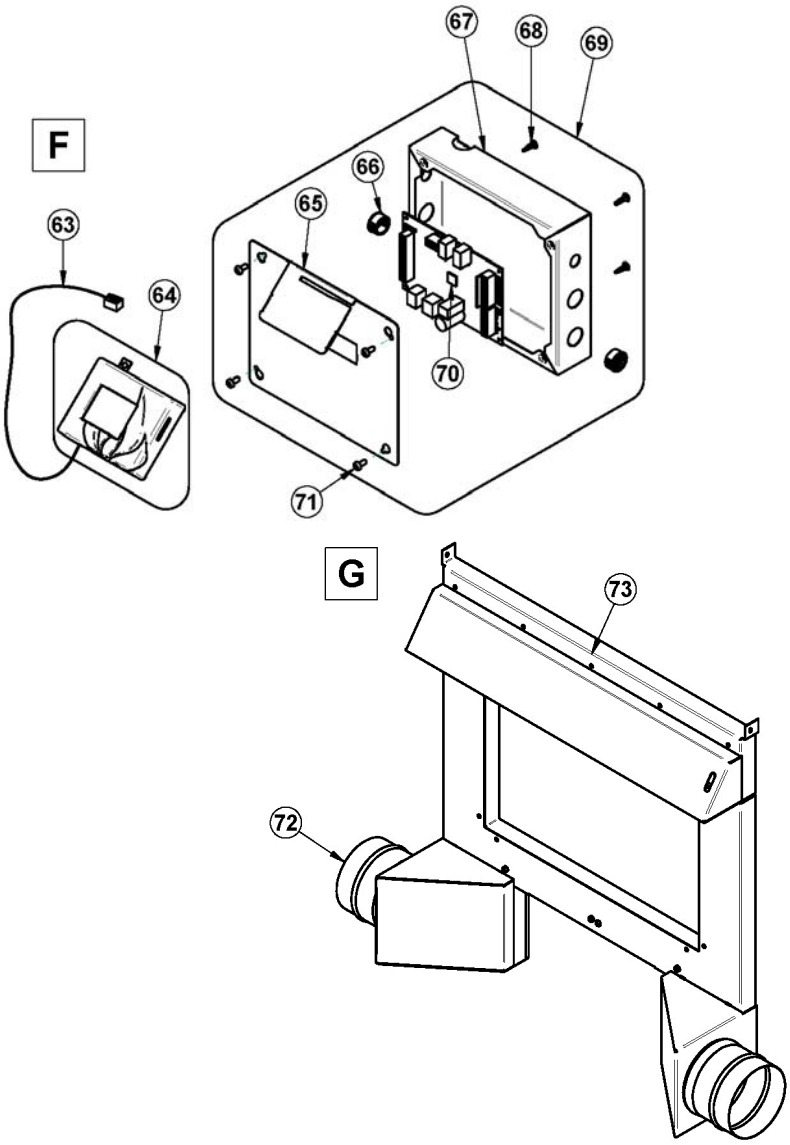

Max Caddy Owner's manual English (page 72 of 81)

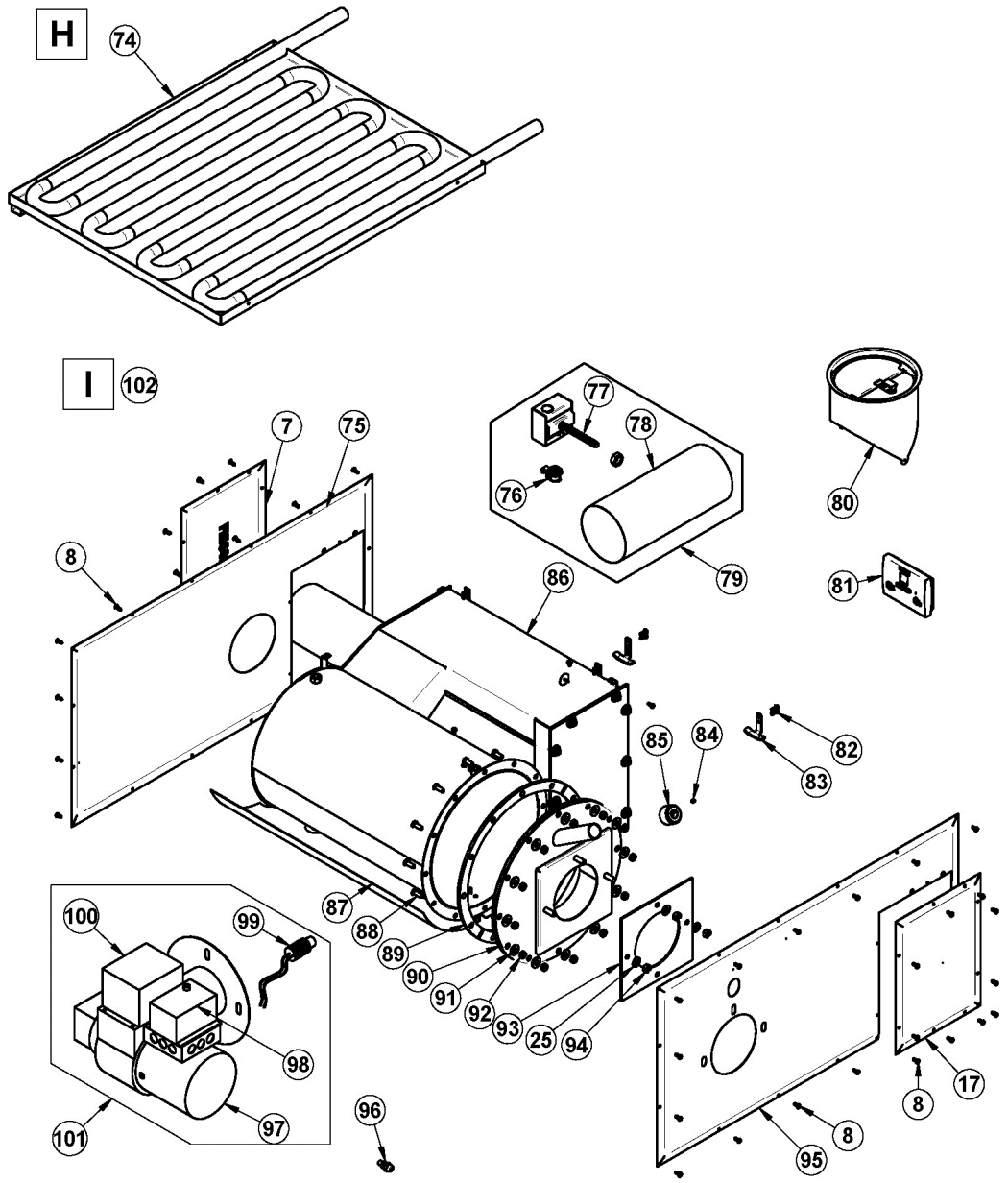

72

Max Caddy Owner's manual English (page 73 of 81)

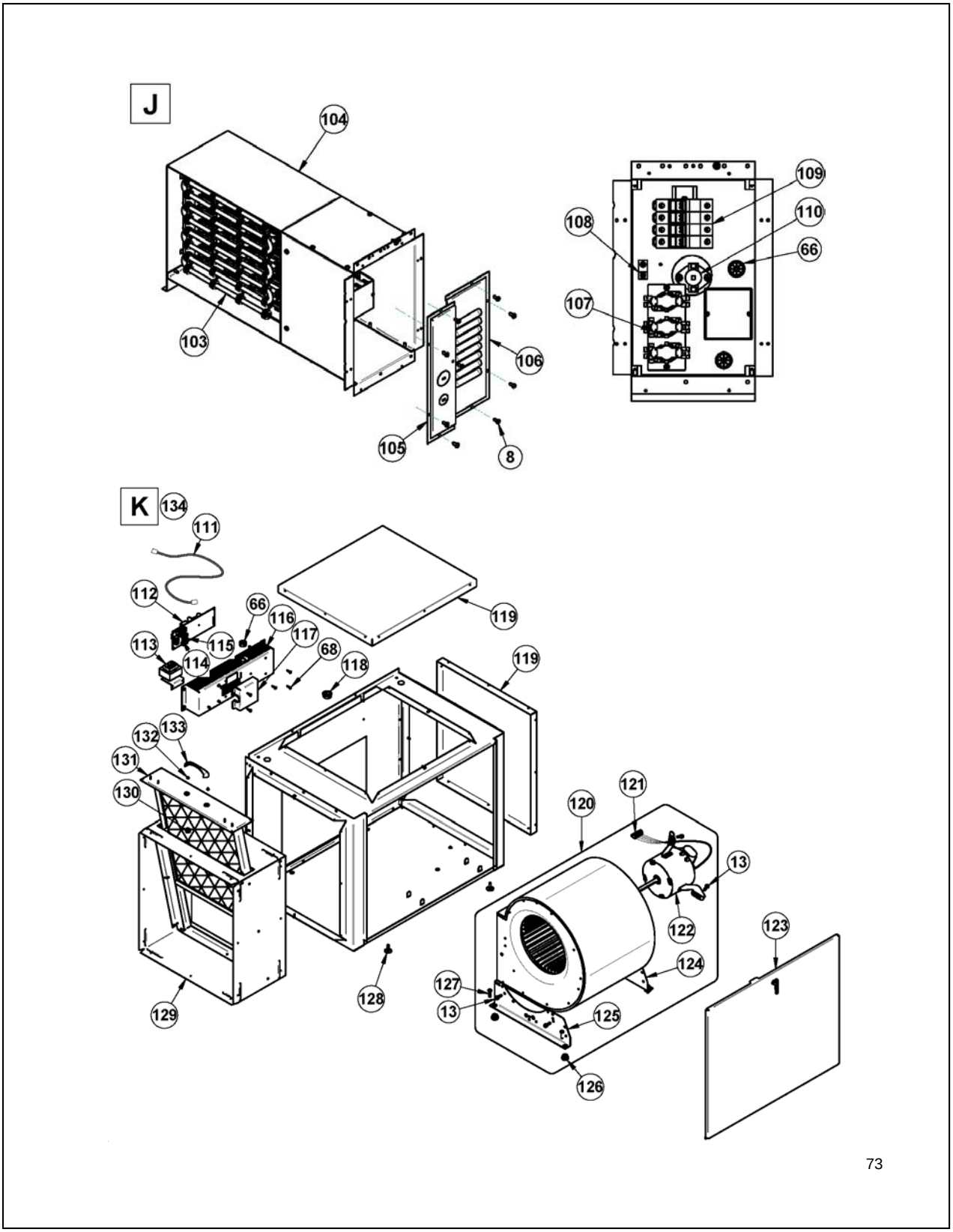

Max Caddy Owner's manual English (page 74 of 81)

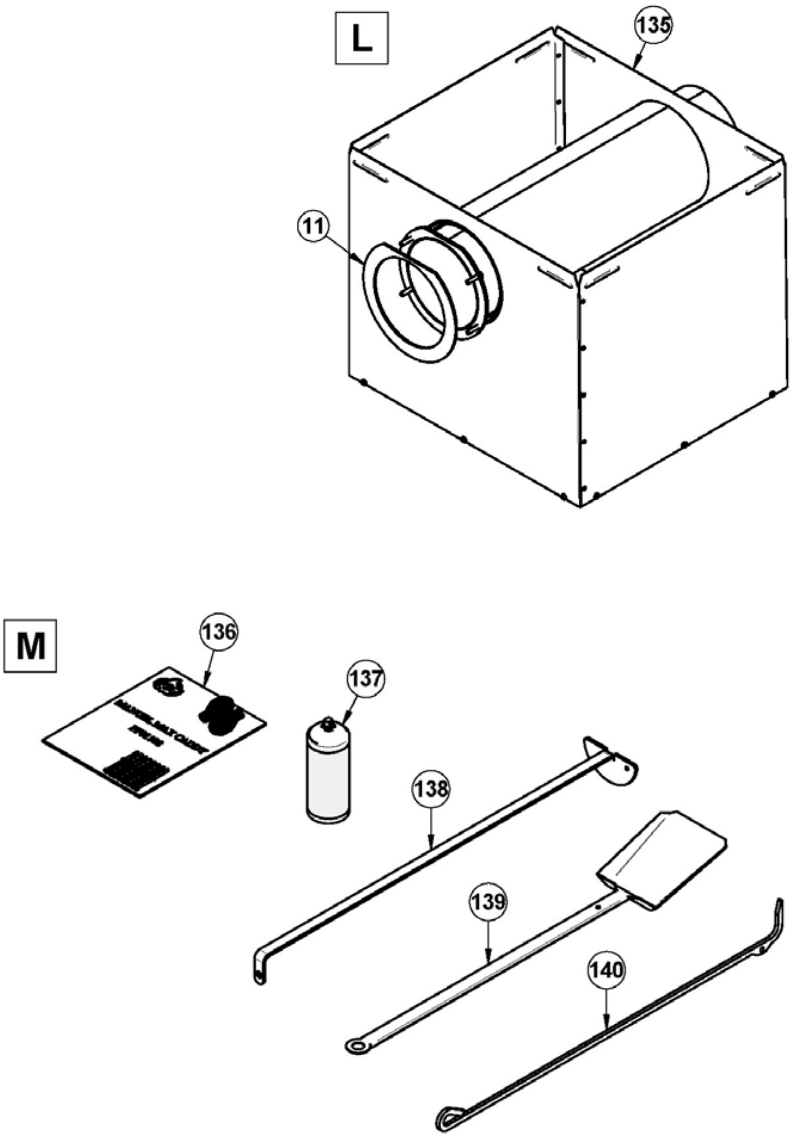

74

Max Caddy Owner's manual English (page 75 of 81)

IMPORTANT: THIS IS DATED INFORMATION. When requesting service or replacement parts for your stove, please provide the model number and the serial number. We reserve the right to change parts due to technology upgrade or availability. Contact an authorized dealer to obtain any of these parts. Never use substitute materials. Use of non-approved parts can result in poor performance and safety hazards.

#	Item	Description	Qty
1	PL56400	DECORATIVE MOULDING	1
2	51000	HONEYWELL 24V DAMPER MOTOR	1
3	PL56276	ASH SHELF	1
4	30060	THREAD-CUTTING SCREW 1/4-20 x 1/2" F HEX STEEL SLOT WASHER C102 ZINC	3
5	PL56403	AIR JACKET FRONT BOTTOM PANEL	1
6	PL56412	LEFT PANEL FOR THE ELECTRICAL ELEMENT OPTION	1
7	PL56413	LEFT ACCESS COVER FOR ELECTRICAL ELEMENT	1
8	30131	BLACK METAL SCREW #10 X 1/2" TYPE "A" PAN QUADREX	1
9	SE56406	AIR JACKET LEFT PANEL WITH INSULATION	1
10	SE56415	LEFT PANEL WITH INSULATION WATER LOOP OPTION	1
11	21221	CHIMNEY ADAPTER GASKET	1
12	SE56352	FLUE COLLAR ASSEMBLY	1
13	30094	HEX SCREW WASHER HEAD 1/4-20 X 3/4" F ZINC TYPE	3
14	SE56408	REAR AIR JACKET PANEL	1
15	21342	REAR COVER GASKET	1
16	PL56480	REAR CABINET COVER	1
17	PL56411	RIGHT ACCESS COVER FOR ELECTRICAL ELEMENT	1
18	PL56410	RIGHT PANEL FOR THE ELECTRICAL ELEMENT OPTION	1
19	SE56407	RIGHT AIR JACKET PANEL WITH ISULATION	1
20	SE56414	RIGHT PANEL WITH INSULATION WATER LOOP OPTION	1
21	30153	METAL SCREW #8 X 1/2" PAN SQUARE TEK BLACK SELF DRILLING	2
22	SE44096	100 OHM RTD PROBE 38" WIRE WITH CONNECTOR	1
23	PL56343	RTD SUPPORT BRACKET	1
24	30416	WING NUT 3/8"-16	1
25	30205	ZINC WASHER ID 13/32" X OD 13/16"	4
26	30055	HINGE PIN RETAINING RING 5/16" ID X 0.512" OD	2
27	30168	HINGE PIN 5/16 DIA. X 1 1/4" L	2
28	AC06900	BLACK 1/2" ROUND X 9' GASKET KIT WITH ADHESIVE	1
29	SE56405	HEAT EXCHANGER ACCESS DOOR	1
30	30502	SELF TAPING SCREW #8 - 32 X 1/2" TYPE F X 3/4 HEX FLAT HEAD	2
31	21341	AIR CONTROL PLATE INSULATION	1
32	SE56322	PRIMARY AIR DAMPER ASSEMBLY	1
33	30128	SOCKET SET SCREW 1/4"-20 X 1 1/4"	1
34	30100	BLACK HEX NUT 1/4 - 20	1
35	30429	3/8" NICKEL COIL HANDLE	1
36	AC09151	REPLACEMENT HANDLE KIT	1
37	SE24027	MAX CADDY CAST IRON DOOR WITH HANDLE	1
38	AC06400	3/4" (FLAT) X 6' BLACK SELF-ADHESIVE GLASS GASKET	1
39	SE56287	REPLACEMENT GLASS WITH GASKET 10 7/8" X 15 1/8"	1
40	PL56285	GLASS RETAINER	2
41	OA11400	SILICONE AND 3/4" X 8' GASKET KIT	1
42	PL51351	GLASS RETAINER FRAME BRACKET	4

Max Caddy Owner's manual English (page 76 of 81)

#	Item	Description	Qty
43	30124	SCREW #8 - 32 X 5/16" TRUSS QUADREX ZINC	4
44	SE56274	ASH DRAWER	1
45	21220	C-CAST BAFFLE 19 3/4" X 11 3/8" X 1 1/4"	2
46	PL56764	REAR SECONDARY AIR TUBE	1
47	PL56763	MIDDLE REAR SECONDARY AIR TUBE	1
48	PL56761	MIDDLE FRONT SECONDARY AIR TUBE	1
49	PL56760	FRONT SECONDARY AIR TUBE	1
50	PL56356	PRIMARY AIR DEFLECTOR HEAT SHIELD	1
51	PL36119	3 1/2" X 8" X 1 1/4" REFRACTORY BRICK	1
52	29001	4" X 8 1/8" X 1 1/4" REFRATORY BRICK HD	20
53	21343	4" X 8" X 1 1/4" REFRACTORY BRICK WITH HOLE	3
54	29005	6" X 8 1/4" X 1 1/4" REFRACTORY BRICK HD	4
55	PL36231	6" X 7 1/2" X 1 1/4" REFRACTORY BRICK	2
56	PL56286	BRICK RETAINER	3
57	24099	CAST IRON ASH GRATE 12" X 7"	1
58	29011	4" X 9" X 1 1/4" REFRACTORY BRICK HD	5
59	PL36234	4" X 6 1/4" X 1 1/4" REFRACTORY BRICK	3
60	PL36059	CUT BRICK 4" X 8 7/8" X 3 3/8" X 3 7/8"	1
61	PL36232	4" X 8 3/4" X 1 1/4" X 1/2" X 3 1/4 REFRACTORY BRICK	1
62	PL36233	3 1/2" X 6" X 1 1/4" REFRACTORY BRICK	2
63	60327	JUNCTION WIRE MAIN CONTROL BOARD TO LCD	1
64	SE56777	MAX CADDY TOUCH SCREEN BOARD (LCD) WITH HOUSING	1
65	PL48251	PC BOARD HOUSING COVER	1
66	30412	BLACK UNIVERSAL SNAP-IN BUSHING	1
67	PL48250	PC BOARD HOUSING	1
68	30408	ELECTRONIC BOARD CLIP	9
69	SE56823	POWER BOARD HOUSING ASSEMBLY	1
70	PL56823	LIMIT MAIN CONTROL BOARD WITH PROGRAM	1
71	30154	BLACK SCREW #10 X 5/8" ROBERTSON TYPE A	4
72	49068	ADAPTER 5" FOR FRESH AIR INTAKE KIT	2
73	PA08560	5" FRESH AIR INTAKE ADAPTER	1
74	PA08550	HOT WATER LOOP KIT FOR PRE-HEATING OF DOMESTIC WATER	1
75	PL56466	LEFT OIL UNIT PANEL	1
76	60201	CONNECTOR 1 SCREW 3/8" FOR BX WIRE	1
77	60216	ELECTRICAL CABLE BX 14/2 50-003-500	1
78	49021	5" PIPE WITH 41/64 HOLE FOR WMO-1 SAFETY DEVICE	1
79	SE48210	BLOCKED FLUE OIL UNIT SWITCH	1
80	51018	BAROMETIC DAMPER 6", 7" AND 8"	1
81	44134	MILLIVOLT THERMOSTATS - WHITE	1
82	30026	THREAD CUTTING SCREW 10-24 F 5/8" HEX WASHER HEAD	4
83	PL56435	OIL UNIT LEG	2
84	30095	SET SCREW HEX 1/4-20 X 1/4"	1
85	SE53352	SEALED VISION CAP	1
86	SE56420	MAX CADDY OIL COMBUSTION CHAMBER	1
87	PL56345	OIL COMBUSTION CHAMBER REAR DEFLECTOR	1
88	30092	BOLT 5/16"-18 X 3/4" HEX GRADE 5	12

Max Caddy Owner's manual English (page 77 of 81)

#	Item	Description	Qty
89	21079	OIL UNIT COVER GASKET	1
90	SE53269	OIL UNIT COVER ASSEMBLY WITH VISION TUBE	1
91	30210	WASHER 29/32" OD X 3/8" ID ZINC	12
92	30425	NUT BRASS 5/16 - 18 HEX	12
93	21085	BURNER / OIL UNIT GASKET	1
94	30423	3/8" - 16 HEX ZINC NUT	3
95	PL56465	RIGHT OIL UNIT PANEL	1
96	51024	NOZZLE DELAVAN .65GPH X 70° W	1
97	60043	BECKETT CLEANCUT OIL PUMP WITH SOLENOID	1
98	44019	PRIMARY CONTROL HW	1
99	44018	CAD CELL BECKETT BURNER	1
100	44023	BECKETT BURNER IGNITOR (TRANSFO)	1
101	51007	RIELLO OIL BURNER	1
101	51006	BECKETT AFG BURNER	1
102	PA08512	BECKETT OIL UNIT	1
102	PA08511	RIELLO OIL UNIT	1
103	60253	10 kW ELECTRICAL ELEMENT (DOUBLE 5 kW)	1
103	60245	SINGLE 5 kW ELECTRIC ELEMENT	1
104	PA08535	20 kW ELECTRICAL ELEMENT	1
104	PA08545	25 kW ELECTRICAL ELEMENT	1
105	PL56507	LEFT COVER OF ELECTRICAL UNIT	1
106	PL56508	AERATION COVER ELECTRICAL UNIT	1
107	60202	SEQUENCER 15S X 441	1
108	60207	ALUMINUM LUG 14-6 STUD 17/64	1
109	60194	FUSE HOLDER 30A. 600V PROTECTION	1
110	60237	THERMODISC L170 MANUAL RESET FOR ELECTRICAL ELEMENT	1
111	60365	60" COMMUNICATION WIRE - 8 CONDUCTOR	1
112	44182	TRIAC BOARD	1
113	60368	TRANSFORMER 120 V/24 V 40 VA	1
114	44136	FUSE 12A / 250V / 1/4" DIA. X 1 1/4" L	1
115	44137	FUSE 1A / 250V / 1/4" DIA. X 1 1/4" L	1
116	PL48243	POWER BOARD HOUSING	1
117	PL48242	POWER BOARD ACCESS PANEL	1
118	30406	BLACK SNAP-ON BUSHING 1 3/4" X 7/8" X 1"	1
119	PL56417	BLOWER BOX REMOVABLE COVER	1
120	SE56512	FAN ASSEMBLY WITH 1/2 HP DD MOTOR	1
121	44186	5 POSITIONS TERMINAL BLOCK	1
122	51038	1/2 HP 4 SPEED MOTOR FOR G-10 DD	1
123	SE56419	BLOWER ACCESS DOOR ASSEMBLY	1
124	30334	LEFT HOUSING SUPPORT FOR G10 BLOWER 10-458-085	1
125	30336	RIGHT HOUSING SUPPORT FOR G10 BLOWER	1
126	30335	BLOWER ANTI-VIBRATION CUSHION	4
127	30109	BOLT HEX 1/4 - 20 X 1"	4
128	30536	LEVELING BOLT 1/4 - 20 X 1"	2
129	SE56418	DUCT SUPPORT ASSEMBLY	1
130	21231	CARDBOARD AIR FILTER 20" X 16" X 1"	1

Max Caddy Owner's manual English (page 78 of 81)

#	Item	Description	Qty
131	SE56450	FILTER DRAWER	1
132	30108	MECHANICAL SCREW M4 X 4MM PAN PHILLIPS ZINC	2
133	28062	BLACK DRAWER HANDLE 3 25/32"	1
134	PA08566	BLOWER ASSEMBLY	1
135	PA08500	TOP AIR RETURN PLENUM KIT	1
136	SE45833	MAX CADDY INSTRUCTION MANUAL KIT	1
137	AC05961	PSG GREY 424C SPRAY PAINT	1
137	AC05963	METALLIC BLACK STOVE PAINT - 85 g (3oz) AEROSOL	1
138	PL48170	HEAT EXCHANGER SCRAPER	1
139	PL48171	ASH SHOVEL	1
140	PL48173	POKER	1

Max Caddy Owner's manual English (page 79 of 81)

WHY PURCHASE THROUGH AN AUTHORIZED PSG DEALER?

To make sure your PSG furnace provides comfort and energy savings in your home for many years, your choice of installer is extremely important. An authorized PSG dealer will ensure that the system is optimized and installed according to standards. Given the importance of the installation, PSG recommends that it is carried out by a professional certified in the Building Code so that the furnace delivers its full potential. This is why PSG offers an additional warranty that covers the cost of labor if your furnace has been purchased through an authorized PSG dealer.

If you want to enjoy the best service on the market and substantial savings on heating costs, there is really only one choice: an **Authorized PSG Dealer**.

Max Caddy Owner's manual English (page 80 of 81)

PSG LIMITED LIFETIME WARRANTY (REGULAR)

The warranty of the manufacturer extends only to the original consumer purchaser and is not transferable. This warranty covers brand new products only, which have not been altered, modified nor repaired since shipment from factory. Proof of purchase (dated bill of sale), model name and serial number must be supplied when making any warranty claim to your PSG dealer.

This warranty applies to normal residential use only. Damages caused by misuse, abuse, improper installation, lack of maintenance, over firing, negligence or accident during transportation, power failures, downdrafts, or venting problems are not covered by this warranty.

This warranty does not cover any scratch, corrosion, distortion, or discoloration. Any defect or damage caused by the use of unauthorized parts or others than original parts void this warranty. An authorized qualified technician must perform the installation in accordance with the instructions supplied with this product and all local and national building codes. Any service call related to an improper installation is not covered by this warranty.

The manufacturer may require that defective products be returned or that digital pictures be provided to support the claim. Returned products are to be shipped prepaid to the manufacturer for investigation. If a product is found to be defective, the manufacturer will repair or replace such defect. Transportation fees to ship the product back to the purchaser will be paid by the manufacturer. All parts costs covered by this warranty are limited according to the table below.

The manufacturer at its discretion may decide to repair or replace any part or unit after inspection and investigation of the defect. The manufacturer may, at its discretion, fully discharge all obligations with respect to this warranty by refunding the wholesale price of any warranted but defective parts. The manufacturer shall in no event be responsible for any special, indirect, consequential damages of any nature, which are in excess of the original purchase price of the product. A one-time replacement limit applies to all parts benefiting from a lifetime coverage. This warranty applies to products purchased after April 1st, 2013.

DESCRIPTION	WARRANTY APPLICATION	
	PARTS	LABOUR
Castings, combustion chamber (welds only), castings, and heat exchanger (welds only).	Lifetime	n/a
Stainless steel firebox components, secondary air tubes*, surrounds and heat shields, ash drawer, and plating* (defective manufacture).	5 years	n/a
Carbon steel firebox components, glass retainers, handle assembly, C-Cast baffle*, and vermiculite baffle*.	3 years	n/a
Oil burner, electrical elements, blowers, heat sensors, switches, rheostat, relays, damper motor, fan limit control, PC board, wiring, and other controls.	2 years	n/a
Ceramic glass (thermal breakage only*), paint (peeling), gaskets, insulation, and ceramic fibre blankets.	1 year	n/a
Firebrick	n/a	n/a

**Pictures required*

Shall your unit or a components be defective, contact immediately your PSG dealer. Prior to your call make sure you have the following information necessary to your warranty claim treatment:

- Your name, address and telephone number;
- Bill of sale and dealer's name;
- Serial number and model name as indicated on the nameplate fixed to the back of your unit;
- Nature of the defect and any relevant information.

Before shipping your unit or defective component to our plant, you must obtain from your PSG dealer an Authorization Number. Any merchandise shipped to our plant without authorization will be refused automatically and returned to sender.

Max Caddy Owner's manual English (page 81 of 81)

PSG LIMITED LIFETIME WARRANTY (PRIVILEGE)

The warranty of the manufacturer extends only to the original consumer purchaser and is not transferable. This warranty covers brand new products only, which have not been altered, modified nor repaired since shipment from factory and purchased through an authorised dealer. Proof of purchase (dated bill of sale), model name and serial number must be supplied when making any warranty claim to your PSG dealer.

This warranty applies to normal residential use only. Damages caused by misuse, abuse, improper installation, lack of maintenance, over firing, negligence or accident during transportation, power failures, downdrafts, or venting problems are not covered by this warranty.

This warranty does not cover any scratch, corrosion, distortion, or discoloration. Any defect or damage caused by the use of unauthorized parts or others than original parts void this warranty. An authorized qualified technician must perform the installation in accordance with the instructions supplied with this product and all local and national building codes. Any service call related to an improper installation is not covered by this warranty.

The manufacturer may require that defective products be returned or that digital pictures be provided to support the claim. Returned products are to be shipped prepaid to the manufacturer for investigation. If a product is found to be defective, the manufacturer will repair or replace such defect. Transportation fees to ship the product back to the purchaser will be paid by the manufacturer. Repair work covered by the warranty, executed at the purchaser's domicile by an authorized qualified technician requires the prior approval of the manufacturer. Labour cost and repair work to the account of the manufacturer are based on predetermined rate schedule and must not exceed the wholesale price of the replacement part. All parts and labour costs covered by this warranty are limited according to the table below.

The manufacturer at its discretion may decide to repair or replace any part or unit after inspection and investigation of the defect. The manufacturer may, at its discretion, fully discharge all obligations with respect to this warranty by refunding the wholesale price of any warranted but defective parts. The manufacturer shall in no event be responsible for any special, indirect, consequential damages of any nature, which are in excess of the original purchase price of the product. A one-time replacement limit applies to all parts benefiting from a lifetime coverage. This warranty applies to products purchased after April 1st, 2013.

DESCRIPTION	WARRANTY APPLICATION	
	PARTS	LABOUR
Castings, combustion chamber (welds only), castings, and heat exchanger (welds only).	Lifetime	3 years
Stainless steel firebox components, secondary air tubes*, surrounds and heat shields, ash drawer, and plating* (defective manufacture).	5 years	3 years
Carbon steel firebox components, glass retainers, handle assembly, C-Cast baffle*, and vermiculite baffle*.	3 years	1 year
Oil burner, electrical elements, blowers, heat sensors, switches, rheostat, relays, damper motor, fan limit control, PC board, wiring, and other controls.	2 years	1 year
Ceramic glass (thermal breakage only*), paint (peeling), gaskets, insulation, and ceramic fibre blankets.	1 year	n/a
Firebrick	n/a	n/a

**Pictures required*

Shall your unit or a components be defective, contact immediately your PSG dealer. Prior to your call make sure you have the following information necessary to your warranty claim treatment:

- Your name, address and telephone number;
- Bill of sale and dealer's name;
- Serial number and model name as indicated on the nameplate fixed to the back of your unit;
- Nature of the defect and any relevant information.

Before shipping your unit or defective component to our plant, you must obtain from your PSG dealer an Authorization Number. Any merchandise shipped to our plant without authorization will be refused automatically and returned to sender.

Max Caddy Owner's manual French

Caddy
Par PSG

Instructions pour l'installation et le fonctionnement de la fournaise à bois MAX CADDY (PF01102)

Homologuée conformément aux normes CSA B415.1-10, CSA B366.1, UL 391, CSA C22.2 no. 236, UL 1995, CAN/CSA B140.4 et UL 727

LISTE DES FOURNAISES CONTENUES DANS CE MANUEL

BOIS SEULEMENT	COMBINÉE 20 kW / 25 kW ET HUILE

Lisez attentivement toutes les instructions avant d'installer et de faire fonctionner votre fournaise.

FÉLICITATIONS!

Vous venez de faire l'acquisition d'une des meilleures fournaises à bois ou combinée sur le marché. Nous sommes convaincus que votre fournaise vous procurera plusieurs années de confort, et ce, en toute sécurité.

Veuillez conserver ce document!

Homologué pour le Canada et les États-Unis par un laboratoire accrédité.

Ce manuel peut être téléchargé gratuitement à partir du site web du manufacturier. Il s'agit d'un document dont les droits d'auteurs sont protégés. La revente de ce manuel est formellement interdite. Le manufacturier se réserve le droit de modifier ce manuel de temps à autre et ne peut être tenu responsable de tout problème, blessure ou dommage subis suite à l'utilisation d'information contenue dans tout manuel obtenu de sources non autorisées.

PSG

L'éco-énergie au cœur de votre maison

PSG
250, rue de Copenhague,
St-Augustin-de-Desmaures (Québec)
CANADA G3A 2H3

Imprimé au Canada

45833F
07-04-2017

Max Caddy Owner's manual French (page 2 of 79)

TABLE DES MATIÈRES

1. INTRODUCTION 5
2. PERFORMANCE DE L'APPAREIL[1] 6
3. CARACTÉRISTIQUES GÉNÉRALES 7
4. SPECIFICATIONS 8
5. DONNÉES TECHNIQUES DE LA MAX CADDY 9
6. DIMENSIONS DE LA FOURNAISE 9
7. TIRAGE ET CHEMINÉE 11
8. RÈGLES DE SÉCURITÉ 11
8.1. EXIGENCES GÉNÉRALES 11
8.2. ODEUR DE PEINTURE 11
8.3. ENTREPOSAGE DES CENDRES 11
8.4. CRÉOSOTE, FORMATION ET NÉCESSITÉ D'ÉLIMINATION 11
8.5. DÉTECTEUR DE FUMÉE 12
8.6. VITRE DE LA PORTE 12
8.6.1. CARACTÉRISTIQUES DE LA VITRE 12
8.7. TIROIR À CENDRES 12
8.8. GRILLE À CENDRES 12
FOURNAISE AU BOIS MAX CADDY, COMBINÉE BOIS/ÉLECTRIQUE OU ANNEXE PARALLÈLE PF01102 13
9. INSTALLATION DE L'APPAREIL 14
9.1. INSTALLATION DE L'ENSEMBLE DE VENTILATEUR 14
9.2. INSTALLATION ET RACCORDEMENT DE LA CARTE LIAISON 14
9.3. INSTALLATION DE L'ÉCRAN TACTILE 18
9.4. INSTALLATION DU CAPTEUR DE TEMPÉRATURE (RTD) DU PLÉNUM D'AIR CHAUD 19
9.5. INSTALLATION ET RACCORDEMENT DU SERVOMOTEUR 20
9.6. EMPLACEMENT DE L'UNITÉ 21
9.7. DÉGAGEMENTS ET PROTECTION DE PLANCHER 21
9.7.1. DÉGAGEMENTS AUX MATÉRIAUX COMBUSTIBLES 22
9.7.2. DÉGAGEMENTS AUX MATÉRIAUX COMBUSTIBLES POUR LE RETOUR D'AIR 23
9.7.3. DÉGAGEMENTS AUX MATÉRIAUX COMBUSTIBLES POUR LE PLÉNUM D'AIR CHAUD 23
9.7.4. PROTECTION DE PLANCHER 23
9.8. RACCORD DU TUYAU ET DU REGISTRE DE TIRAGE 24
9.9. RACCORDEMENT ÉLECTRIQUE 25
9.10. REGISTRE DE TIRAGE 25
9.11. AIR DE COMBUSTION (INSTALLATION D'UNE ENTRÉE D'AIR FRAIS) 25
9.12. PLÉNUM D'AIR CHAUD 26
9.13. INSTALLATION EN PARALLÈLE (ÉTATS-UNIS SEULEMENT) 26
9.14. INSTALLATION DE L'ÉLÉMENT ÉLECTRIQUE (OPTIONNEL) 29
9.14.1. INTRODUCTION 29
9.14.2. BRANCHEMENT 29
10. INSTALLATION DU THERMOSTAT 30
10.1. FOURNAISE À BOIS SEULEMENT 30
10.1.1. FOURNAISE COMBINÉE BOIS-ÉLECTRIQUE OU BOIS-HUILE 30
10.1.2. FOURNAISE COMBINÉE BOIS-ÉLECTRIQUE-HUILE 30
10.2. INSTALLATION D'UN CLIMATISEUR 31
10.3. INSTALLATION D'UNE THERMOPOMPE 31
10.4. INSTALLATION D'UN SYSTÈME DE PRÉCHAUFFAGE DE L'EAU DOMESTIQUE ET D'UN HUMIDIFICATEUR 32
11. INSTRUCTIONS DE CONFIGURATION ET D'OPÉRATION 32
11.1. SYSTÈMES DE CONTRÔLE 32
11.2. CONFIGURATION DU SYSTÈME 33
11.3. ÉCRAN TACTILE 33
11.3.1. DESCRIPTION DES ICÔNES 33
11.3.2. SÉLECTION DE LA LANGUE ET DE L'UNITÉ DE TEMPÉRATURE 34
11.4. AJOUT DE SOURCE DE CHAUFFAGE AUXILIAIRE ET SÉLECTION DES OPTIONS 34
11.4.1. TRANSITION VERS UN CHAUFFAGE AUXILIAIRE 34
11.4.2. AJUSTEMENT DES PARAMÈTRES DE TRANSITION VERS LE CHAUFFAGE AUXILIAIRE 34
11.4.3. PRIORISATION DES SOURCES DE CHAUFFAGE 35
11.4.4. CAPTEUR DE TEMPÉRATURE EXTÉRIEURE 35
11.4.4.1. CONFIGURATION BI-ÉNERGIE 35
11.5. CONFIGURATION DES VITESSES DU VENTILATEUR DE DISTRIBUTION 36
11.5.1. LES VITESSES 36
11.6. BALANCEMENT DU SYSTÈME 37
11.7. FONCTIONNEMENT DES DIFFÉRENTS MODES 37
11.7.1. CHAUFFAGE (mode HEAT) 37

Max Caddy Owner's manual French (page 3 of 79)

11.7.2. CLIMATISATION (mode COOL) ... 37
11.7.3. CIRCULATION (Mode CIRC) ... 37
11.8. CHAUFFAGE AU BOIS ... 38
11.8.1. ALLUMAGE ... 38
11.8.2. PRÉCHAUFFAGE ... 38
11.8.3. CHAUFFAGE ... 38
11.8.4. LES PREMIÈRES INDICATIONS D'UNE SURCHAUFFE ... 38
11.8.5. LE BOIS COMME COMBUSTIBLE DE CHAUFFAGE ... 39
11.8.6. PANNE DE COURANT PROLONGÉE ... 39
11.8.7. FEU DE CHEMINÉE ... 39
11.8.8. SERVICE DES INCENDIES DE VOTRE MUNICIPALITÉ. ... 39
12. ENTRETIEN ... 40
12.1. ENTRETIEN DES ÉCHANGEURS ... 40
12.2. ENTRETIEN DE LA CHEMINÉE ... 41
12.3. INSPECTION DU TUYAU À FUMÉE ... 41
12.4. ENTRETIEN DU MOTEUR DU VENTILATEUR ... 41
12.5. FILTRES ... 41
12.5.1. DIMENSION DU FILTRE ... 41
12.6. AJUSTEMENT DE LA PORTE ET ENTRETIEN DU CORDON D'ÉTANCHÉITÉ ... 41
12.6.1. AJUSTEMENT DE LA PORTE ... 41
13. PIÈCES DE REMPLACEMENT ... 42
13.1. LA VITRE ... 42
13.2. LE JOINT D'ÉTANCHÉITÉ ... 42
14. DÉPANNAGE ... 42
14.1. VÉRIFICATION DE L'ÉTAT DE FONCTIONNEMENT D'UNE COMPOSANTE ... 43
14.1.1. VENTILATEUR DE DISTRIBUTION ... 43
14.1.2. VOLET DE COMBUSTION, SERPENTIN D'EAU CHAUDE ET HUMIDIFICATEUR ... 43
14.1.3. CAPTEUR DE TEMPÉRATURE (RTD) ... 43
14.2. PRINCIPAUX CODES D'ERREURS, CAUSES ET SOLUTIONS POSSIBLES ... 44
14.2.1. LA FOURNAISE SURCHAUFFE ... 44
14.2.2. AUCUN CHAUFFAGE ... 45
14.2.3. ERREUR DE COMMUNICATION ... 45
14.2.4. ODEUR DE FUMÉE ... 46
14.2.5. L'ÉCRAN TACTILE NE S'ALLUME PAS ... 46
14.2.6. SYSTÈME AUXILIAIRE ... 46
15. SCHÉMA ÉLECTRIQUE GÉNÉRAL ... 47
16. SCHÉMA ÉLECTRIQUE POUR FOURNAISE EN PARALLÈLE ... 48
17. SCHÉMA ÉLECTRIQUE POUR UNITÉ ÉLECTRIQUE ... 49
FOURNAISE COMBINÉE BOIS/HUILE ... 50
18. GÉNÉRALITÉS ... 52
19. TIRAGE ET CHEMINÉE ... 52
20. RÉSERVOIR À L'HUILE ET TUYAUTERIE ... 52
21. POMPE DU BRÛLEUR ... 52
22. INSTALLATION DE L'APPAREIL ... 53
22.1. EMPLACEMENT DE L'UNITÉ ... 53
22.2. INSTALLATION EN PARALLÈLE ... 53
22.3. DÉGAGEMENTS AUX MATÉRIAUX COMBUSTIBLES ... 53
22.4. PROTECTION DE PLANCHER ... 54
22.5. PLÉNUM D'AIR CHAUD ... 54
22.6. RACCORD DU TUYAU ET REGISTRE DE TIRAGE ... 54
22.7. DIFFÉRENTES INSTALLATIONS ... 55
22.8. AIR DE COMBUSTION ... 56
22.9. RACCORDEMENT ÉLECTRIQUE ... 56
22.10. THERMOSTAT ... 56
23. INSTRUCTIONS D'OPÉRATION ... 56
23.1. CONTRÔLE DU VENTILATEUR ... 56
23.2. CONTRÔLE DE SÉCURITÉ DE LA COMBUSTION ... 56
23.3. PRÉ-PURGE ... 56
23.4. SÉCURITÉ DE FONCTIONNEMENT ... 56
23.5. DÉSENGAGEMENT TEMPORAIRE DU BRÛLEUR ... 56
23.6. AJUSTEMENT ET VÉRIFICATION DE LA COMBUSTION ... 57
23.6.1. PROCÉDURE DE VÉRIFICATION DE LA COMBUSTION : ... 57
23.6.2. RÉGLAGE DES ÉLECTRODES ... 58
23.7. MISE EN MARCHE DE L'APPAREIL ... 59

Max Caddy Owner's manual French (page 4 of 79)

23.8. ARRÊT PROLONGÉ 59
24. DONNÉES TECHNIQUES 59
24.1. UH – MAX CADDY 59
25. ENTRETIEN 59
25.1. NETTOYAGE ET ENTRETIEN 59
25.2. SERVICE TECHNIQUE 60
25.3. FILTRES 60
26. SCHÉMA ÉLECTRIQUE UNITÉ À L'HUILE BECKETT 61
27. SCHÉMA ÉLECTRIQUE UNITÉ À L'HUILE RIELLO 62
28. RACCORDEMENTS OPTIONS CARTE LIAISON 63
28.1. CONSOMMATION ÉLECTRIQUE 63
28.2. SONDE EXTÉRIEURE 63
28.3. OPTION EAU CHAUDE 63
28.4. ÉQUIPEMENT 24V ADDITIONNEL 64
28.5. REGISTRE AIR CLIMATISÉ 64
28.6. HUMIDIFICATEUR 64
28.7. THERMOPOMPE 65
29. VUE ÉCLATÉE ET LISTE DE PIÈCES 65
GARANTIE À VIE LIMITÉE PSG (DE BASE) 78
GARANTIE À VIE LIMITÉE PSG (PRIVILÈGE) 79

Max Caddy Owner's manual French (page 5 of 79)

NOTE IMPORTANTE

CETTE FOURNAISE ET SON SYSTÈME DE CONDUITS D'AIR CHAUD DOIVENT ÊTRE VENDUS ET INSTALLÉS PAR UN PROFESSIONNEL. À DÉFAUT DE POUVOIR S'ENTRETENIR AVEC UN PROFESSIONNEL AYANT FAIT L'INSTALLATION DE LA FOURNAISE, LE MANUFACTURIER SE RÉSERVE LE DROIT DE NE PAS APPLIQUER SA GARANTIE OU DE REFUSER TOUT SOUTIEN TECHNIQUE.

ENREGISTREMENT EN LIGNE DE LA GARANTIE

Afin d'obtenir une couverture complète en cas de réclamation sur garantie, vous devrez fournir une preuve et une date d'achat. Conservez votre facture d'achat. Nous vous recommandons également d'enregistrer votre garantie en ligne au http://www.caddyfurnaces.com/fr/garantie/enregistrement-garantie
L'enregistrement de votre garantie en ligne nous aidera à retrouver rapidement les informations requises sur votre appareil.

MISE EN GARDE : L'INSTALLATION DE L'APPAREIL REQUIERT L'AJOUT D'UN ENSEMBLE DE VENTILATEUR (PA08566) NON INCLUS.

1. INTRODUCTION

Cette fournaise utilise une technologie de combustion (avec le bois comme combustible) qui est semblable au fonctionnement des poêles à bois « EPA ». Cela s'applique à l'allumage, au fond de braise requis et au minimum d'entrée d'air de combustion qui fut déterminée en prenant compte d'un combustible sec et de qualité.

La fournaise Max Caddy a été testée et approuvée selon la norme CSA B415.1-10 qui est la norme canadienne sur les émissions de particules.

Pour obtenir le meilleur rendement possible de votre fournaise, voici quelques conseils à mettre en pratique en ce qui concerne l'installation et le fonctionnement de votre fournaise Max Caddy.

- Respectez les codes locaux (en cas de doute, contactez votre détaillant);
- Assurez-vous que votre fournaise est installée conformément aux instructions apparaissant sur la plaque d'homologation;
- L'ajustement de tous les contrôles doit être fait par un technicien compétent. Le réglage des contrôles et de la vitesse du ventilateur doivent être conforme aux recommandations de la CMMTQ tout en respectant les plages de pression statique recommandées dans le plénum d'air chaud de la fournaise.

Nous recommandons que nos produits de chauffage au bois soient installés et entretenus par des professionnels certifiés aux États-Unis par le NFI (National Fireplace Institute®) ou au Canada par WETT (Wood Energy Technical Training) ou au Québec par l'APC (Association des Professionnels du Chauffage).

Max Caddy Owner's manual French (page 6 of 79)

2. PERFORMANCE DE L'APPAREIL(1)

Type de combustible	Bûches de bois sec	
Superficie de chauffage recommandée [*]	1,500 à 3,500pi² (139 à 325 m²)	
Volume de la chambre à combustion	4.9 pi³ (0.139 m³)	
Temps de combustion maximal [*]	17 h	
Potentiel énergétique à l'entrée (bûches de bois sec)(2)	421,000 BTU	
Puissance thermique globale (min. à max.)(3)	18,436 BTU/h à 66,620 BTU/h (5.6 kW à 19.6 kW)	
Puissance nominale avec densité de chargement du combustible de 15 lb/pi³	100,000 BTU/h	
Rendement moyen global(4)	78.9 % (PCS)(5)	85 % (PCI)(6)
Puissance thermique distribuée (min. to max.)(7)	15,112 BTU/h à 51,203 BTU/h (4.7 kW à 16.0 kW)	
Rendement moyen distribué(8)	64.6 % (PCS)(5)	69.7 % (PCI)(6)
Rendement optimal(9)	85.7 %	
Taux moyen d'émission de particules(10) (11)	0.752 lb/mmBTU (0.324 g/MJ)	
Taux moyen de CO(12)	17.45 lb/mmBTU (7.51 g/MJ)	
Consommation électrique moyenne (13)	360 Wh	

[*] La superficie de chauffage recommandée et le temps de combustion maximal peuvent varier selon la localisation de l'appareil dans l'habitation, le tirage de la cheminée, le climat, les facteurs de perte de chaleur, le type de bois utilisé et d'autres variables. La superficie de chauffage recommandée pour un appareil est définie par le manufacturier comme sa capacité à conserver une température minimale acceptable considérant que la configuration de l'espace ou la présence de système de distribution d'air ont un impact important sur la distribution optimale de la chaleur.

(1) Valeurs telles qu'obtenues en test selon CSA B415.1-10, à l'exception de la superficie de chauffage recommandée, du volume de la chambre à combustion, du temps de combustion maximal et du potentiel énergétique. Les performances sont basées sur une charge d'essai prescrite par la norme à 10 lb/pi³ et dont l'humidité varie entre 18% et 28%.

(2) Potentiel calculé avec densité de chargement du combustible de 10 lb/pi³ et un pouvoir calorifique sur une base sèche de 8,600 BTU/lb.

(3) Globale : Inclus la chaleur par rayonnement de l'appareil et celle distribuée à une densité de chargement du combustible de 10lb/pi³ pour un cycle de combustion complet.

(4) Rendement basé sur la puissance thermique distribuée obtenue par alternance entre les taux de combustion maximum et minimum et simulant les demandes thermostatiques.

(5) Pouvoir Calorifique Supérieur du combustible.

(6) Pouvoir Calorifique Inférieur du combustible.

(7) Distribuée : Acheminée vers d'autres pièces par un système de ventilation à une densité de chargement du combustible de 10 lb/pi³ pour un cycle de combustion complet.

(8) Rendement basé sur la puissance thermique distribuée et par rayonnement obtenue par alternance entre les taux de combustion maximum et minimum et simulant les demandes thermostatiques.

(9) Rendement optimal à un taux de combustion spécifique (PCI).

(10) Basé sur la puissance thermique distribuée.

(11) Cet appareil est officiellement testé et certifié par un organisme indépendant.

(12) Monoxyde de carbone. Basé sur la puissance thermique globale à une densité de chargement du combustible de 10 lb/pi³.

(13) Sauf indication contraire, les mesures ont été prises à la source d'alimentation de courant principale et incluent toutes les composantes électriques de l'appareil.

Max Caddy Owner's manual French (page 7 of 79)

3. CARACTÉRISTIQUES GÉNÉRALES

Longueur maximale des bûches	25 po (635 mm) / orientation nord-sud*
Diamètre de la buse de raccordement	6 po (152 mm)
Diamètre du tuyau de raccordement recommandé	6 po (152 mm) si installée au bois ou bois-électrique
Diamètre du tuyau de raccordement obligatoire	7 po (178 mm)si installée en version bois-huile
Diamètre de cheminée recommandé	6 po (152 mm) si installée au bois ou bois-électrique
Diamètre de cheminée obligatoire	7 po (178 mm) si installée en version bois-huile
Type de cheminée requise	CAN/ULC S629, UL 103 HT (2100 °F)
Coupe-feu	C-Cast
Installation en parallèle	États-Unis seulement
Installation en alcôve	Non approuvé
Installation dans une maison mobile‡	Non approuvé
Poids de l'appareil (sans option)	614 lb (279 kg)
Poids à l'expédition (sans option)	729 lb (331 kg)
Ventilateur (options bois et bois/électrique seulement)	1/2 HP, entraînement direct, 4 vitesses, 2,100 PCM
Filtres – dimensions (Largeur x Hauteur x Profondeur) (inclus avec le ventilateur optionnel)	16 po x 20 po x 1 po (406 mm x 508 mm x 25 mm)
Filtres – quantité	1
Normes d'émissions de particules	EPA / CSA B415.1-10
Norme américaine (sécurité)	UL 391, UL 1995, UL 727
Norme canadienne (sécurité)	CSA B366.1, CSA C22.2 no 236, CAN/CSA B140.4

* *Orientation est-ouest : par la porte on voit le côté longitudinal des bûches; orientation nord-sud : par la porte on voit le bout des bûches.*

‡ *Maison mobile (Canada) ou maison préfabriquée (É.-U.) : Le département américain du logement et du développement urbain décrit «maisons préfabriquées» mieux connues pour «maisons mobiles» comme suit ; bâtiments construits sur des roues fixes et ceux transportés sur des roues/essieux temporaires installées sur une fondation permanente. Au Canada, une maison mobile est une habitation dont l'assemblage de chaque composante est achevé ou achevé en grande partie avant le déplacement de celle-ci jusqu'à un emplacement pour y être placée sur des fondations, raccordé à des installations de service et qui rencontre la norme CAN/CSA-Z240 MH.*

Max Caddy Owner's manual French (page 8 of 79)

4. SPECIFICATIONS

Couleur	Gris
Contrôlée par thermostat	oui
Type de porte	Simple, vitrée, avec cadre en fonte
Type de vitre	Verre céramique
Plénum de retour d'air – dimensions (Profondeur ou Hauteur)	17 15/16 po
Plénum de retour d'air – dimension (Largeur)	19 15/16 po
Plénum d'air chaud – dimensions (Profondeur ou Hauteur)	32 1/8 po
Plénum d'air chaud – dimension (Largeur)	25 3/8 in po
Tiroir à cendres – dimensions (Largeur x Profondeur x Hauteur)	11 15/16 po x 19 5/8 po x 2 5/8 in po
Dégagement – devant	48 po
Dégagement – mur arrière	24 po du boîtier du ventilateur, recommandé pour l'entretien
Dégagement – mur côté	6 po sans options installées
Dégagement – mur côté opposé	24 po
Dégagements – conduits d'air chaud	6 po avec pare-chaleur pour les premiers six pieds et 1 po par la suite
Dégagement – recommandé pour l'entretien du côté de l'option	24 po
Brûleur – efficacité	Beckett AFG : 85 % / Riello : 87%
Brûleur – marque standard	Beckett AFG
Brûleur – autres marques approuvées	Riello
Brûleur – localisation	Gauche ou droite
Brûleur – dégagement recommandé pour l'entretien	24 po
Brûleur – diamètre du tuyau de raccordement obligatoire (bois-huile)	7 po
Brûleur – diamètre du tuyau d'évacuation obligatoire	5 po
Brûleur – localisation du tuyau d'évacuation	Gauche ou droite
Brûleur – capacité à l'entrée pour la puissance #1 / #2 Beckett	91,000 Btu (27 kW) / 120,000 Btu (35 KW)
Brûleur – orifice pour la puissance #1 / #2 Beckett	0,65 gal/h* 70 degrés W (2,46 l/h) (pour les deux puissances)
Brûleur – pression à la pompe pour la puissance #1 / #2 Beckett	100 PSI / 175 PSI
Brûleur – capacité à l'entrée pour la puissance #1 / #2 Riello	91,000 Btu (27 kW) / 120,000 Btu (35 KW)
Brûleur – orifice pour la puissance #1 / #2 Riello	0.50 gal/h* 70 degrés W (1.89 l/h) / 0.65 gal/h* 70 degrés W (2.46 l/h)
Brûleur – pression à la pompe pour la puissance #1 / #2 Riello	150 PSI / 165 PSI
Élément électrique – localisation	Gauche ou droite
Élément électrique – dégagement – recommandé pour l'entretien	24 po
Élément électrique – recommandé (puissance)	20 kW
Élément électrique – autre optionnel (puissance)	25 kW
Plénum d'air frais – matériel	Acier galvanisé
Plénum d'air frais – dimensions (Largeur x Profondeur x Hauteur)	20" x 18" x 17 1/4"
Plénum d'air frais – Diamètre du tuyau à fumée	6 po
Adaptateur pour prise d'air frais optionnel	5 po
Adaptateur pour prise d'air frais optionnel – localisation	Gauche ou droite
Testé et listé selon les standards applicables par	Un laboratoire accrédité (CAN/É.-U.)
Garantie	Garantie Limitée à vie

* Gallons U.S. (1 gallon U.S. = 0.83 gallon impérial)

Max Caddy Owner's manual French (page 9 of 79)

5. DONNÉES TECHNIQUES DE LA MAX CADDY

MODÈLE	ENTRAÎNEMENT DIRECT (DIRECT DRIVE)			DÉBIT THÉORIQUE	TEMP VAR.	PRESSION STATIQUE		FILTRE
	VENT	MOT.	VIT.	(PCM)	(°F)	MIN.	MAX.	(1)
						Pouce H_2O		
MAX CADDY AVEC VENTILATEUR/ MAX CADDY ANNEXE PARALLÈLE	G-10	1/2	4	2,100	100	0,2	0,5	20" x 16" x 1"

6. DIMENSIONS DE LA FOURNAISE

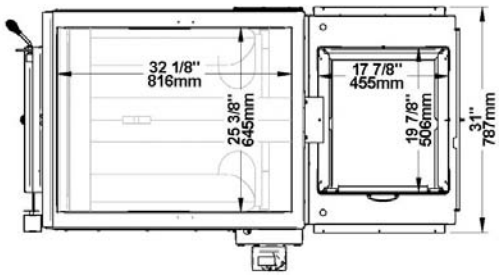

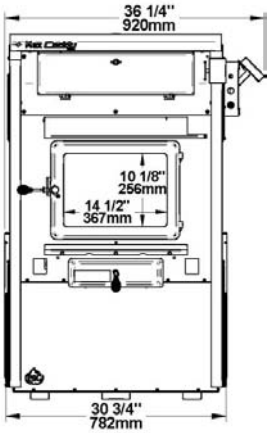

BOIS ET BOIS/ÉLECTRIQUE

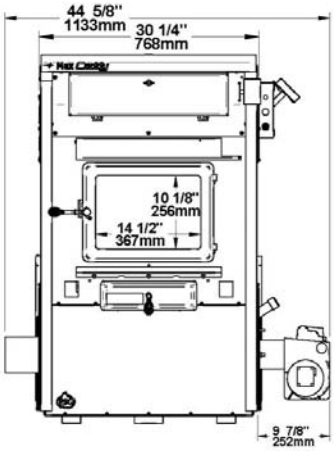

BOIS/HUILE

Max Caddy Owner's manual French (page 10 of 79)

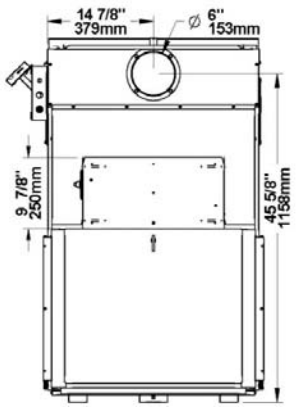

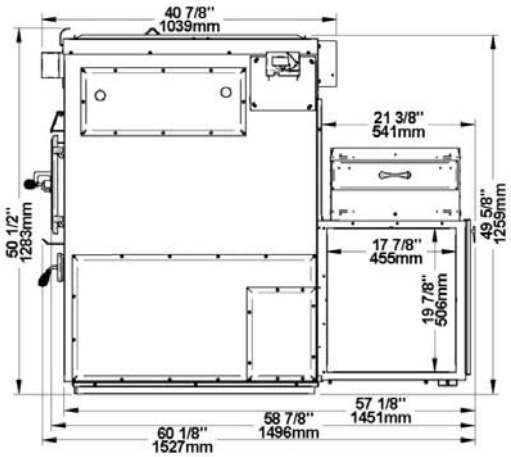

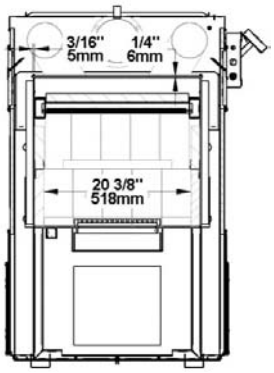

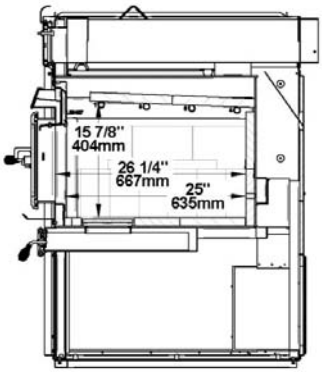

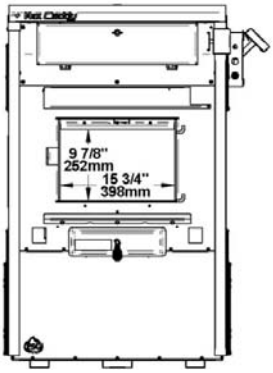

10

Max Caddy Owner's manual French (page 11 of 79)

7. TIRAGE ET CHEMINÉE

Cette fournaise doit être raccordée à une cheminée approuvée pour appareils de chauffage à bois; il est obligatoire de raccorder à un tuyau de raccordement et une cheminée de 7" de diamètre pour la Max Caddy si l'appareil est installé en version bois-huile, bois-huile-électrique ou encore si l'huile peut s'avérer une option éventuelle. Si l'appareil est installé en version bois ou bois-électrique, un tuyau de raccordement et une cheminée de 6" de diamètre sont recommandés.

Ne pas raccorder cet appareil à une cheminée desservant un autre appareil. Si le tirage pris dans le tuyau d'évacuation (tuyau de raccordement) excède 0.06 PO. C.E., un volet barométrique devrait être installé. N'installez jamais de registre de cheminée manuel. Le contrôle barométrique doit être ajusté de façon à limiter le tirage maximum mesuré sur le tuyau d'évacuation de la fournaise à 0,06 P.O.C.E. Veuillez noter que l'appareil pourrait s'emballer (feu incontrôlable) si le tirage excède 0,06 P.O.CE. **Par contre, le tirage minimum à respecter est de 0,04 P.O.C.E. dans le tuyau d'évacuation du côté bois, et ce, quel que soit le type de fournaise (MAX CADDY BOIS, MAX CADDY BOIS/ÉLECTRIQUE OU BOIS/HUILE). Les entrées d'air ne doivent en aucun cas être modifiées en vue d'augmenter la combustion.**

8. RÈGLES DE SÉCURITÉ

ATTENTION

LES INFORMATIONS INSCRITES SUR LA PLAQUE D'HOMOLOGATION DE L'APPAREIL ONT TOUJOURS PRÉSÉANCE SUR LES INFORMATIONS CONTENUES DANS TOUT AUTRE MÉDIA PUBLIÉ (MANUELS, CATALOGUES, CIRCULAIRES, REVUES ET/OU LES SITES WEB).

8.1. EXIGENCES GÉNÉRALES

S'ASSURER QUE LA SORTIE DE CHEMINÉE DE LA FOURNAISE ET LES TUYAUX SONT PROPRES ET EN BONNE CONDITION.

NE PAS UTILISER DE PRODUITS CHIMIQUES OU DE LIQUIDES POUR ALLUMER LE FEU.

NE PAS BRÛLER DE BOIS RECOUVERT DE PEINTURE, DE COLLE OU DE PRODUITS CHIMIQUES.

NE PAS BRÛLER DE DÉCHETS, DE LIQUIDES INFLAMMABLES TELS QUE DE L'ESSENCE, DU NAPHTE, DE L'HUILE À MOTEUR OU AUTRES MATIÈRES IMPROPRES.

N'ENTREPOSEZ PAS DE BOIS PRÈS DE LA FOURNAISE. RESPECTEZ LES DÉGAGEMENTS PRESCRITS ENTRE LES MATÉRIAUX COMBUSTIBLES ET LA SOURCE DE CHALEUR.

AVERTISSEMENT

LE TIROIR À CENDRE ET LE PANNEAU D'ACCÈS AUX ÉCHANGEURS DEVIENNENT TRÈS CHAUDS ET NE DOIVENT PAS ÊTRE MANIPULÉS À MAINS NUES.

8.2. ODEUR DE PEINTURE

Il est normal qu'une odeur de fumée se dégage de l'appareil lors du premier allumage; il est recommandé de chauffer à haut régime et de bien aérer la maison jusqu'à ce que l'odeur se résorbe. La fumée dégagée n'est pas toxique. **Cette procédure devrait se faire avant que les conduits d'air chaud soient reliés à la fournaise afin de prévenir la dispersion de fumée dans la maison.**

8.3. ENTREPOSAGE DES CENDRES

Les cendres devront être placées dans un contenant de métal avec un couvercle étanche. Ce contenant devrait être placé dehors, loin de tout matériel inflammable. Ce contenant ne doit recevoir aucun autre type de déchet. Si les cendres sont destinées à être enterrées, elles devraient demeurer dans le contenant métallique jusqu'à ce qu'elles soient complètement refroidies.

8.4. CRÉOSOTE, FORMATION ET NÉCESSITÉ D'ÉLIMINATION

Lorsque le bois est brûlé lentement, il produit du goudron et d'autres vapeurs organiques qui, combinées avec de l'humidité, forment la créosote. Les vapeurs de créosote se condensent dans les tuyaux d'une fournaise relativement froide. Le résultat est une accumulation de résidus de créosote sur la paroi intérieure du tuyau à fumée et des échangeurs.

N.B. Afin de diminuer la fréquence des nettoyages de la cheminée, faites l'acquisition de votre bois de chauffage au moins un an avant de l'utiliser. Placez-le à un endroit sec sous un abri. De cette façon, le taux d'humidité sera à son

Max Caddy Owner's manual French (page 12 of 79)

minimum lors de l'utilisation et vous obtiendrez un meilleur rendement. Ne jamais entreposer le bois ou des matières combustibles à l'intérieur des distances d'installation ou dans l'espace nécessaire pour le chargement ou pour le nettoyage des cendres.

Lorsque la créosote prend feu, cela produit une flamme extrêmement chaude à l'intérieur de la cheminée.

Lors de la première année d'utilisation, vérifiez régulièrement l'accumulation de saletés dans la cheminée et les conduits. Lorsque vous aurez pu évaluer la vitesse à laquelle le système s'encrasse, vous serez en mesure d'instaurer un programme de nettoyage régulier. Tout dépendant du degré d'utilisation et du bois utilisé, un nettoyage semi-annuel peut être nécessaire. Un nettoyage annuel est obligatoire. **S'il y a une accumulation de créosote, un nettoyage immédiat s'impose afin d'éliminer le risque d'incendie.**

Rappelez-vous qu'un petit feu intense est préférable à un gros feu à l'état étouffé pour prévenir l'accumulation de créosote. Il est essentiel d'avoir un plan d'urgence en cas de feu de cheminée. **De plus, il est particulièrement important de nettoyer les échangeurs et les conduits à la fin de la saison, afin de réduire au minimum les risques de corrosion.**

8.5. DÉTECTEUR DE FUMÉE

Nous recommandons fortement l'utilisation d'un détecteur de fumée dans votre maison. Il doit être installé à une distance minimum de 15 pieds (4,57 m) de l'appareil afin d'éviter que la fumée pouvant s'échapper lors du chargement ou de l'allumage ne déclenche inutilement le détecteur.

8.6. VITRE DE LA PORTE

Si vous voulez garder une installation propre et sécuritaire, il ne faudrait pas construire votre feu trop près de la vitre ou appuyer vos bûches sur celle-ci.

Ne faites pas fonctionner votre fournaise à un régime de combustion trop bas. Laissez l'entrée d'air ouverte assez longtemps à l'allumage pour que le feu ne soit pas porté à étouffer à régime réduit, sinon vous risquez de salir la vitre inutilement.

Un feu intense aide votre vitre à se nettoyer d'elle-même. Toutefois, si elle est vraiment trop sale, ce qui ne devrait normalement pas se produire, vous devrez utiliser un chiffon humide et un nettoyeur pour vitres de poêles et foyers à bois. Nettoyez la vitre **SEULEMENT** lorsque l'appareil est froid. N'utilisez pas un nettoyeur abrasif.

ATTENTION : Éviter de cogner ou de rayer la vitre. Cela pourrait l'endommager.

8.6.1. CARACTÉRISTIQUES DE LA VITRE

La vitre est en verre céramique d'une épaisseur de 3/16" (5 mm).

Si vous chauffez votre fournaise avec une vitre brisée, vous pouvez sérieusement endommager votre appareil.

Pour vous procurer une vitre de remplacement, consultez votre détaillant.

8.7. TIROIR À CENDRES

Votre appareil est muni d'un tiroir à cendre servant à recevoir les cendres produites par la combustion du bois. Le panneau d'accès au tiroir ne doit en aucun cas demeurer ouvert pendant la combustion car cela activerait la flamme et créerait un feu incontrôlable et le surplus d'air pourrait causer la dispersion de cendres dans le système de ventilation. **Le tiroir doit être nettoyé régulièrement. Utilisez un aspirateur pour retirer toutes cendres autour du tiroir. Le fait de ne pas effectuer cette opération importante causerait la dispersion des cendres dans le système de ventilation.**

Il est nécessaire de maintenir la porte et le cendrier fermés lors du fonctionnement de l'appareil et de garder les cordons d'étanchéité en bon état. En cas de détérioration, consultez votre détaillant et procurez-vous une pièce d'origine.

8.8. GRILLE À CENDRES

Lorsque la grille à cendre est en voie de se détériorer, elle doit être remplacée. Vous pourrez vous en procurer une nouvelle chez votre détaillant.

Max Caddy Owner's manual French (page 13 of 79)

INSTRUCTIONS POUR L'INSTALLATION
ET L'OPÉRATION DE LA

FOURNAISE AU BOIS MAX CADDY, COMBINÉE BOIS/ÉLECTRIQUE OU ANNEXE PARALLÈLE (ÉTATS-UNIS SEULEMENT) PF01102

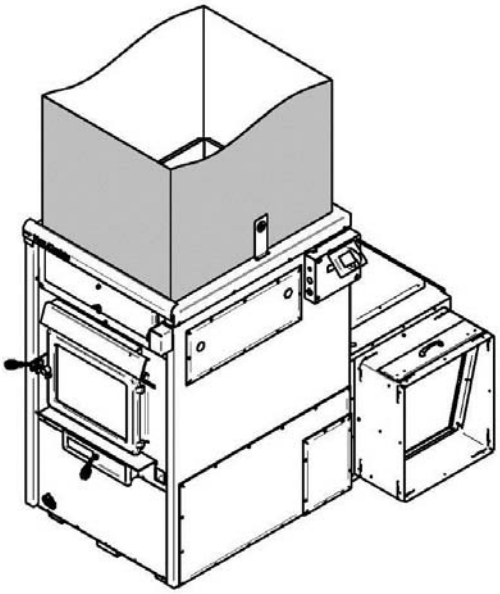

FOURNAISE MAX CADDY – BOIS SEULEMENT

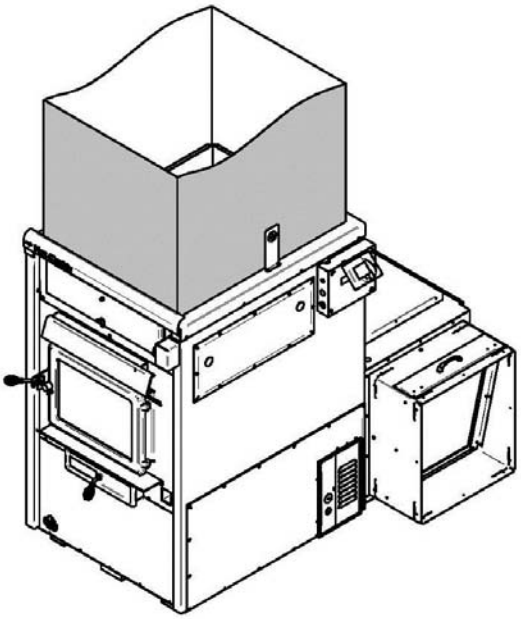

FOURNAISE MAX CADDY – COMBINÉE BOIS / ÉLECTRIQUE

Max Caddy Owner's manual French (page 14 of 79)

9. INSTALLATION DE L'APPAREIL

L'installation doit être faite en respectant les codes d'installation applicables soient la norme CSA-B365 « Installation code for solid-fuel-burning appliances and equipment » au Canada et la norme NFPA 90B « Standard for the installation of warm air heating and air-conditioning system » aux États-Unis. De plus, pour toutes connections électrique, la norme canadienne CSA C22.1 « Canadian electrical code » et aux États-Unis la norme NFPA 70 « National Electrical Code » doivent être suivies.

L'ajustement de tous les contrôles doit être fait par un technicien compétent. Le réglage des contrôles et de la vitesse du ventilateur doivent être conforme aux recommandations de la CMMTQ tout en respectant les plages de pression statique recommandées pour le plénum d'air chaud de la fournaise.

Nous recommandons que nos produits de chauffage au bois soient installés et entretenus par des professionnels certifiés aux États-Unis par le NFI (National Fireplace Institute®) ou au Canada par WETT (Wood Energy Technical Training) ou au Québec par l'APC (Association des Professionnels du Chauffage).

Inspectez la fournaise pour s'assurer qu'elle n'a pas été endommagée au cours du transport. Retirez les commandes électriques et l'enveloppe contenant les instructions qui se trouvent dans la chambre à combustion et les outils qui se trouvent dans les tuyaux d'évacuation de la fournaise.

Les instructions d'installation de cette section s'appliquent à la Max Caddy bois-seulement, à la Max Caddy bois-électrique et la Max Caddy annexe parallèle.

9.1. INSTALLATION DE L'ENSEMBLE DE VENTILATEUR

Pour utiliser la configuration de la fournaise Max Caddy bois seulement, l'ensemble de ventilateur (PA08566 vendu séparément) est nécessaire. Les instructions d'assemblage se trouvent dans le manuel d'instruction fourni avec l'ensemble de ventilateur.

9.2. INSTALLATION ET RACCORDEMENT DE LA CARTE LIAISON

Les instructions d'installation qui suivent s'appliquent pour une localisation des contrôles à la droite ou à la gauche de l'appareil. Le côté le plus accessible est à privilégier pour faciliter le raccordement des appareils auxiliaires ou pour l'entretien.

Les composantes à être installées se trouve dans la chambre à combustion de la fournaise.
Retirez le couvercle du boîtier de la carte liaison.

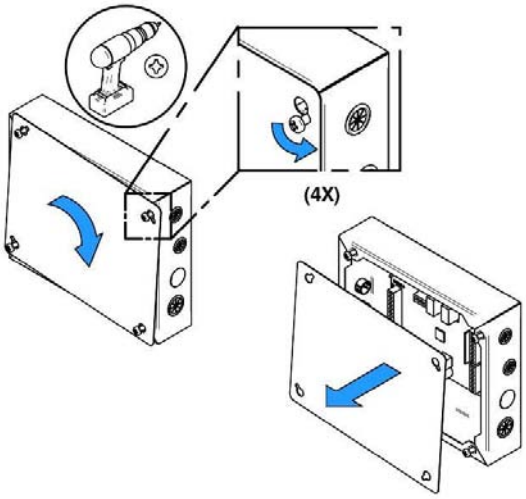

Max Caddy Owner's manual French (page 15 of 79)

Retirez les quatre vis présente sur le côté d'installation désiré.

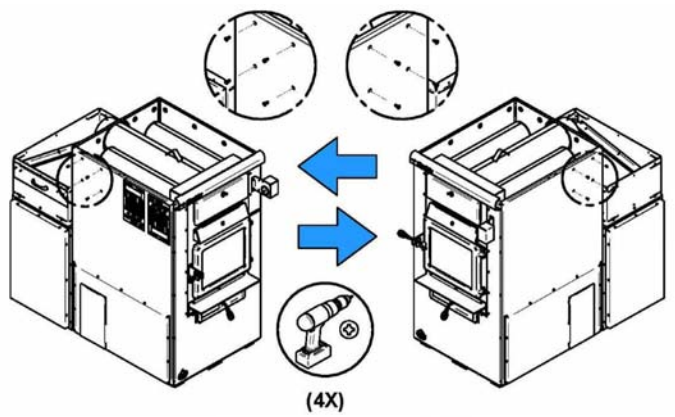

Alignez les trous dans les embosses du boîtier de carte liaison avec les trous sur le côté de la fournaise. Utilisez les vis retirées à l'étape précédente pour fixer le boîtier à la fournaise.

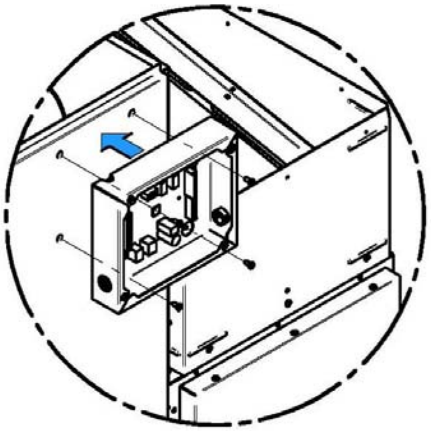

Une fois installée, la carte de liaison doit être raccordée au système à l'aide du fil de communication de la carte puissance. Ce fil se trouve dans le boîtier du ventilateur. Pour y accéder, enlever le retour d'air.

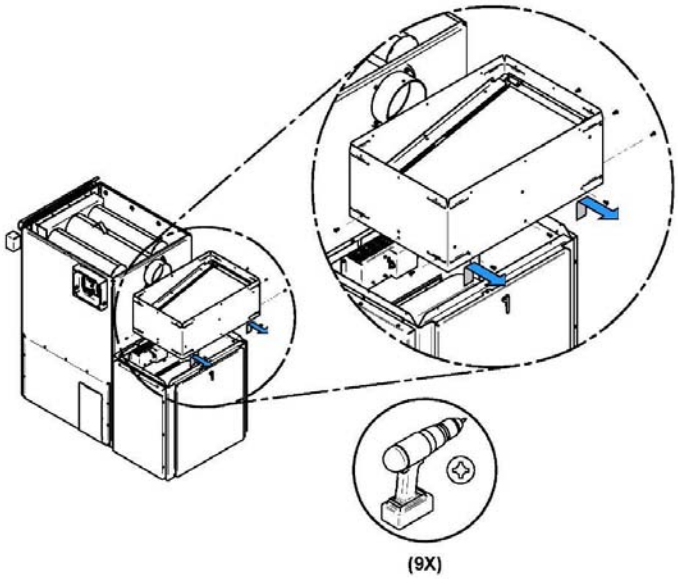

15

Max Caddy Owner's manual French (page 16 of 79)

Prenez le fil de télécommunication et sortez-le via le passe-fil situé du côté du boîtier de la carte liaison.

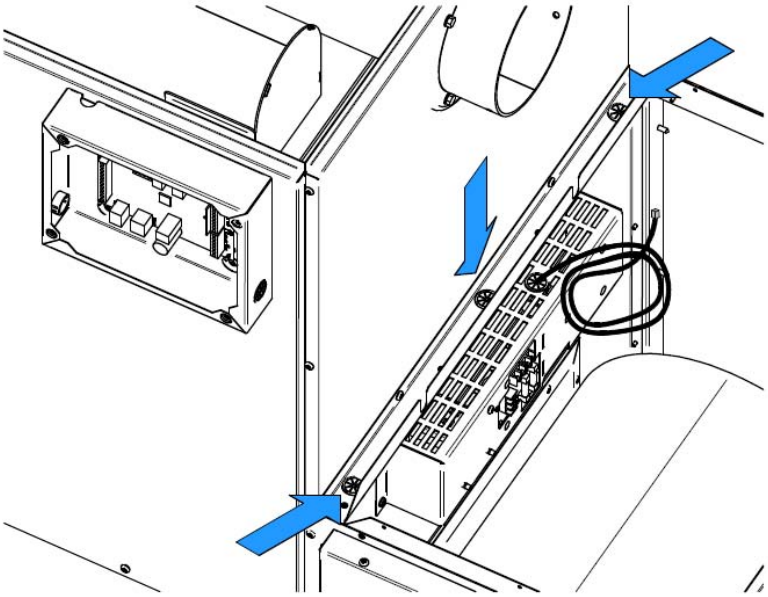

Une fois le fil de télécommunication sorti du côté désiré, le faire passer le long du dos de la fournaise et le faire entrer dans le passe-fil du bas du boîtier de la carte liaison. Compléter le branchement en insérant le fil de télécommunication 8 brins dans le connecteur de droite montré par la flèche.

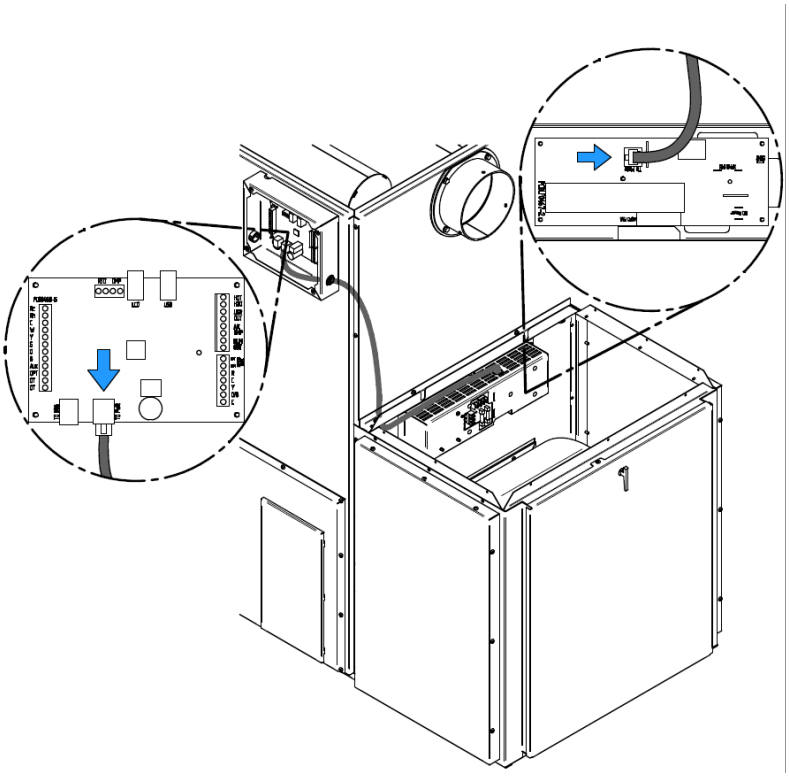

16

Max Caddy Owner's manual French (page 17 of 79)

Votre fournaise doit aussi être reliée à une source de courant 115V. Ouvrir le couvercle du boîtier de la carte puissance.

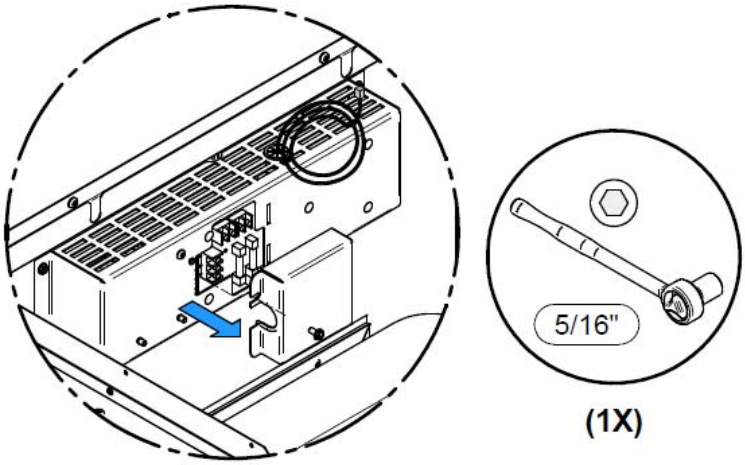

Raccordez le cordon d'alimentation aux bornes N (Neutre) F (Mise à terre) L (Ligne). Référez-vous au schéma électrique pour le branchement des composantes. Une fois fait, sécurisez les fils en place à l'aide d'un connecteur BX (non inclus) et remettez le couvercle du boîtier de ventilateur.

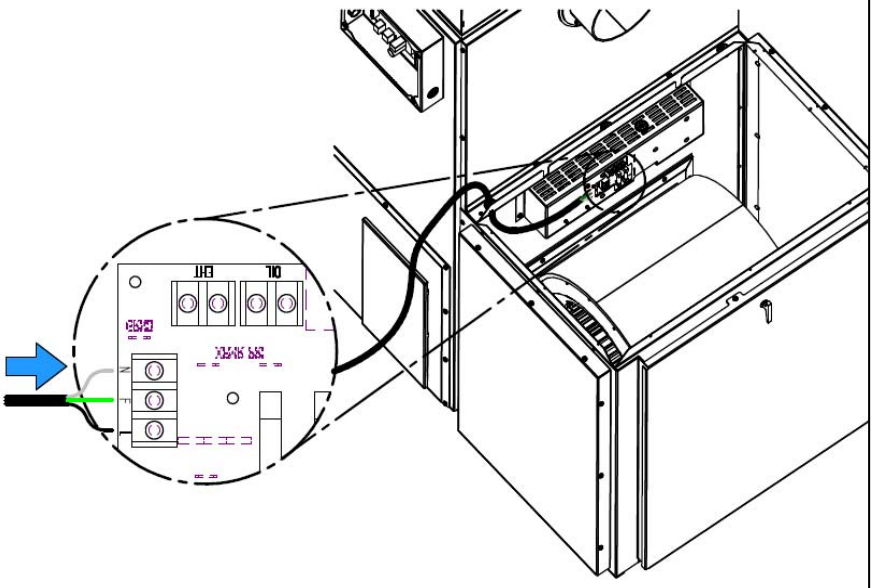

Max Caddy Owner's manual French (page 18 of 79)

9.3. INSTALLATION DE L'ÉCRAN TACTILE

L'écran tactile est utilisé pour opérer le système. Il doit être installé sur le support prévu à cet effet à l'arrière de la fournaise, du même côté que le boîtier de la carte liaison.

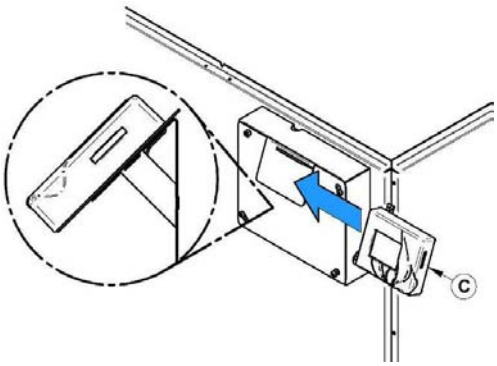

Connectez la carte de liaison à l'écran tactile à l'aide du fil de télécommunication fourni dans l'ensemble de manuel. Branchez le fil de télécommunication dans le terminal de la carte de liaison étiqueté LCD et faites-le sortir du boîtier via le passe-fil du haut. Faites simplement courir le fil sur le côté de la fournaise en utilisant les attaches en plastique fournies avec l'ensemble de manuel d'utilisation. Remettez en place le panneau d'accès de la carte liaison. Prenez note que l'écran tactile est amovible si l'accès est restreint.

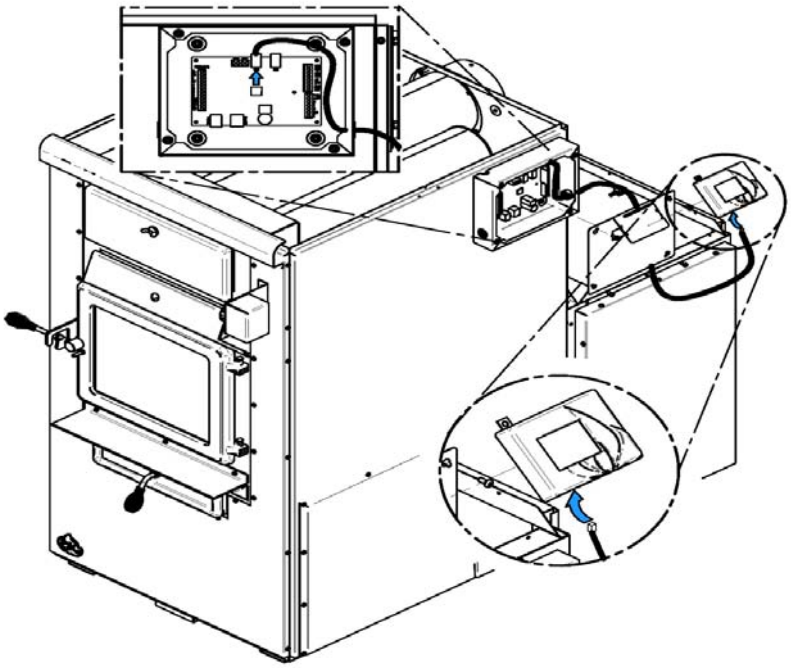

Max Caddy Owner's manual French (page 19 of 79)

9.4. INSTALLATION DU CAPTEUR DE TEMPÉRATURE (RTD) DU PLÉNUM D'AIR CHAUD

Sur la Max Caddy, un capteur de température (RTD) doit être installé sur le côté de l'appareil à l'aide du support fourni avec celui-ci. Le capteur de température est primordial au fonctionnement de l'appareil. Elle sert à lire la température à l'intérieur du plénum d'air chaud de la fournaise. Il est important que le RTD et que le support du RTD soient sécurisés de façon appropriée sur le plénum d'air chaud.

ATTENTION : UTILISEZ DES FILS (NON INCLUS) APPROUVÉS POUR 75 °C OU PLUS.

ÉTAPE 1 : Retirez les deux vis déjà sécurisées sur la fournaise (B) du côté où vous avez choisi d'installer le boîtier de la carte liaison. Ensuite, sécurisez le support du RTD (A) à l'aide des deux vis que vous avez retirées précédemment.

ÉTAPE 2 : À l'aide d'une perceuse et d'une mèche 9/32", percez un trou dans le plénum d'air chaud de façon à ce que la tige du RTD puisse entrer dans ce trou.

ÉTAPES 3 et 4 : Sécurisez le RTD en place sur le plénum d'air chaud à l'aide des deux vis auto-perçantes fournies avec le manuel d'utilisation.

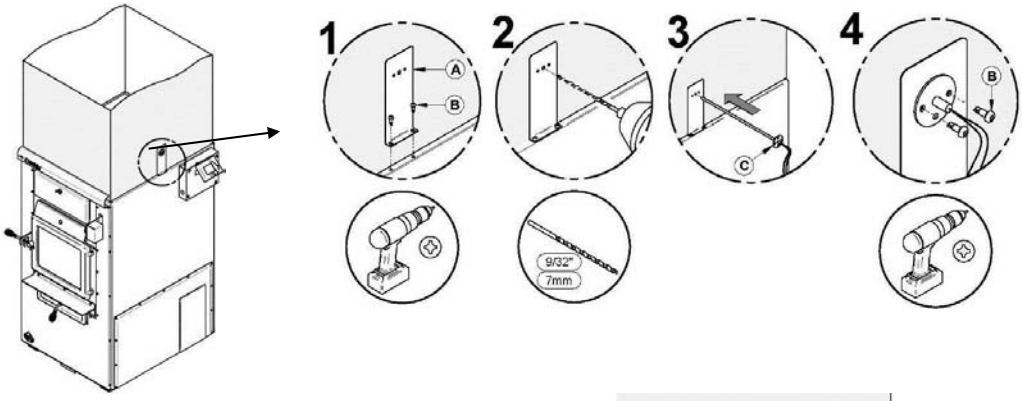

Une fois le RTD installé sur le support, il faut procéder à son branchement à la carte liaison. Faites passer les fils du RTD dans le passe fil et les faire sortir tout près de la carte de liaison. Pour le branchement sur la carte, référez-vous au schéma électrique.

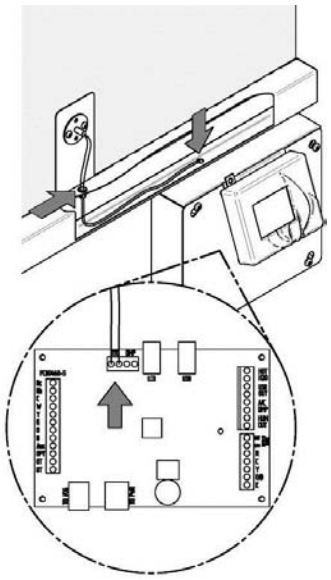

Max Caddy Owner's manual French (page 20 of 79)

9.5. INSTALLATION ET RACCORDEMENT DU SERVOMOTEUR

Votre fournaise Max Caddy est munie d'un servomoteur. Pour l'installer, il suffit de le visser en place dans les deux trous pré percés à cet effet en utilisant deux vis tel qu'illustré ci-dessous.

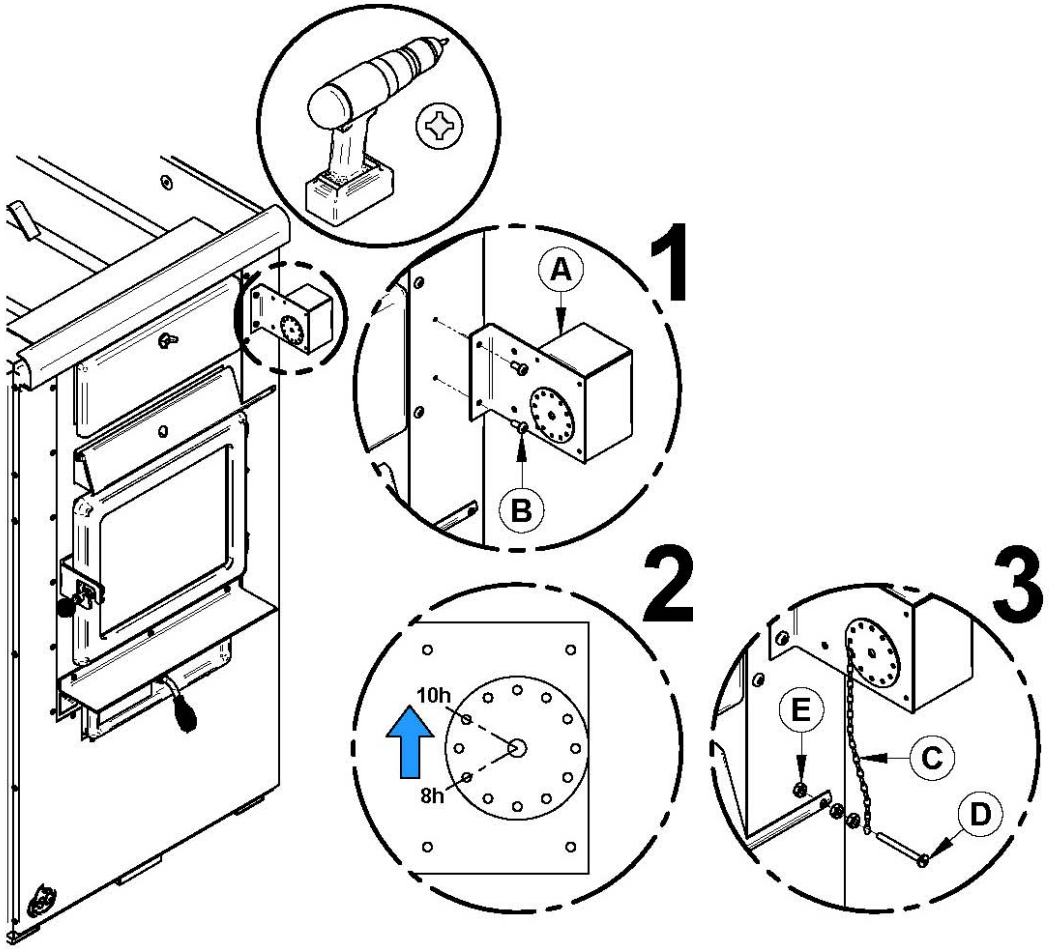

Une fois installé, il faut installer la chaînette reliant le servomoteur sur la trappe d'entrée d'air primaire tel qu'illustré ci-dessus. La chaîne qui relie la trappe d'entrée d'air au moteur doit avoir un jeu de 1/8" et doit être sécurisée en place à l'aide du crochet. Lorsqu'il n'y a pas de demande de chaleur, la trappe d'entrée d'air doit être complètement fermée et la chaîne doit être fixée au servomoteur à 8 heures.

Max Caddy Owner's manual French (page 21 of 79)

Par la suite, vous devez faire le branchement entre le servomoteur et la carte liaison. Sortez les fils du servomoteur et faites-les entrer dans le passe-fil. Les faire sortir par le trou à proximité du boîtier de la carte liaison.

Pour le branchement, référez-vous au schéma électrique.

ATTENTION : UTILISEZ DES FILS (NON INCLUS) APPROUVÉS POUR 75 °C OU PLUS.

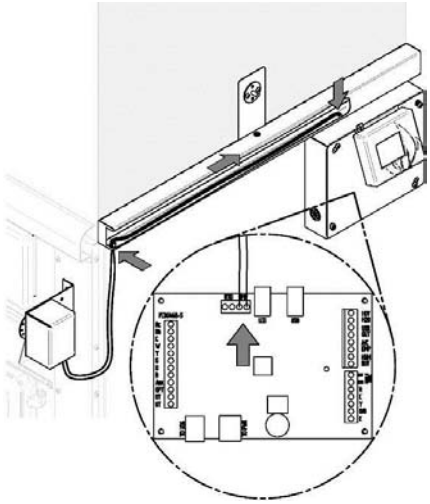

9.6. EMPLACEMENT DE L'UNITÉ

Pour un fonctionnement sûr et silencieux, la fournaise doit être de niveau dans les deux directions et supporté uniformément afin d'en assurer la stabilité.

La fournaise doit être installée dans un endroit où il y a apport d'air extérieur suffisant pour alimenter la combustion. Dans les maisons étanches, il peut être nécessaire d'installer une entrée d'air extérieure (Voir la Section 9.11 - AIR DE COMBUSTION (INSTALLATION D'UNE ENTRÉE D'AIR FRAIS))

La fournaise doit être positionnée de façon à ce que le tuyau de raccordement soit le plus court possible dans le but d'éliminer au maximum l'utilisation de coudes à 90º.

Le propriétaire doit s'assurer d'une installation qui permet un fonctionnement sécuritaire de l'appareil.

9.7. DÉGAGEMENTS ET PROTECTION DE PLANCHER

N.B. : Cet appareil doit être installé conformément aux instructions sur la plaque d'homologation appliquée sur l'unité.

L'INSTALLATION DE L'ÉCRAN PARE-CHALEUR (-1-) FOURNI AVEC L'APPAREIL EST OBLIGATOIRE.

Max Caddy Owner's manual French (page 22 of 79)

9.7.1. DÉGAGEMENTS AUX MATÉRIAUX COMBUSTIBLES

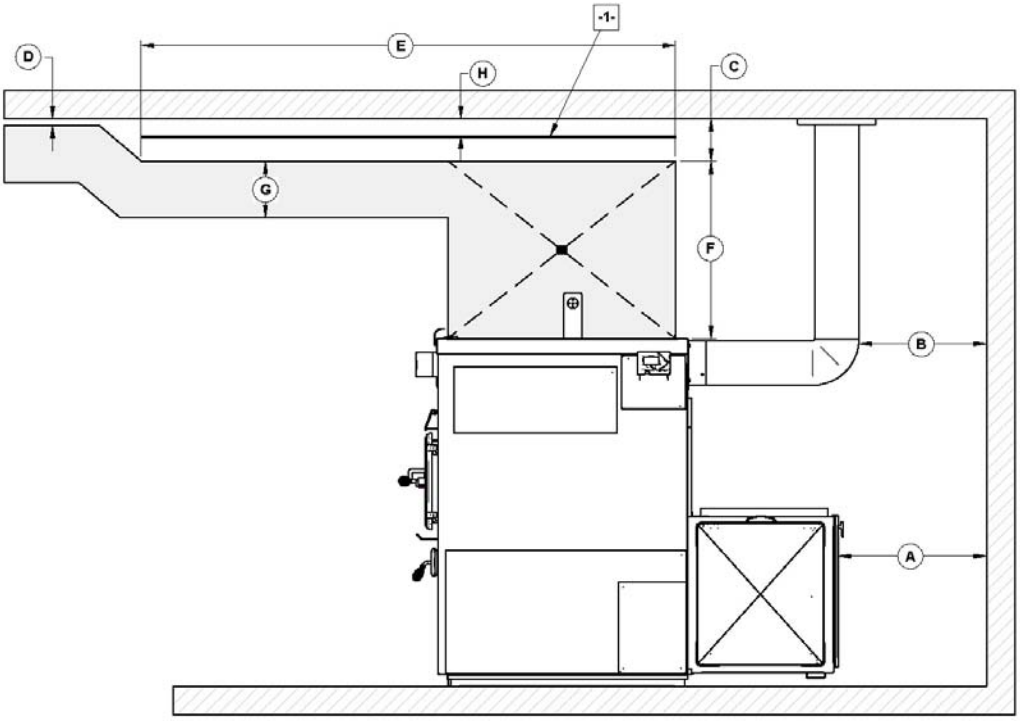

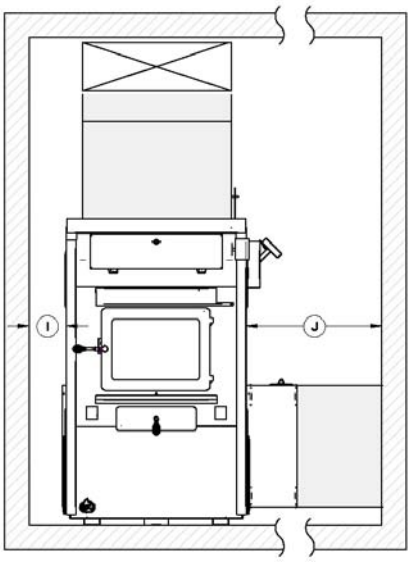

DÉGAGEMENTS MINIMUMS			
A	24" (610 mm)	**G**	8" (204 mm)
B	18" (458 mm)	**H**	1 1/2" (38.1 mm)
C	6" (153 mm)	**I**	6" (153 mm)
D	1" (26 mm)	**J**	24" (610 mm)
E	72" (1 829 mm)		
F	24" (610 mm)		
-1-	**HEAT SHIELD**		

Max Caddy Owner's manual French (page 23 of 79)

9.7.2. DÉGAGEMENTS AUX MATÉRIAUX COMBUSTIBLES POUR LE RETOUR D'AIR

Le conduit de retour d'air devrait être au moins égal en dimensions au plénum de retour d'air. Le conduit de retour d'air peut être installé à dégagement zéro avec les matériaux combustibles.

9.7.3. DÉGAGEMENTS AUX MATÉRIAUX COMBUSTIBLES POUR LE PLÉNUM D'AIR CHAUD

Les plénums installés sur la fournaise doivent être faits de métal en accord avec la norme CSA B365 ou NFPA 90B. Le conduit d'air chaud peut être passé à travers le mur de côté avec un dégagement de Six (6) pouces autour de celui-ci.

9.7.4. PROTECTION DE PLANCHER

Si le plancher est fait de matériaux non combustibles, aucune protection de plancher n'est requise.
Si le plancher est fait de matériaux combustibles, une protection de plancher incombustible est requise (voir tableau ci-dessous).

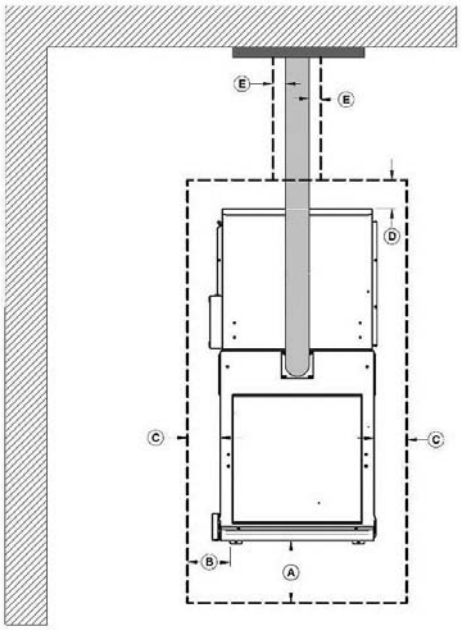

	PROTECTION DE PLANCHER*	
	CANADA	**É-U.**
A	18" (457 mm) À partir de l'ouverture de porte	16" (406 mm) À partir de l'ouverture de porte
B	N/A (É-U. seulement)	8" (203 mm) À partir de l'ouverture de porte
C	8" (203 mm)	N/A (Canada seulement)
D	8" (203 mm) – Note 1	N/A (Canada seulement)
E	N/A (É-U. seulement)	Note 2

**Acier d'une épaisseur minimale de 0.015" (0.38 mm) ou carreaux de céramique joints à l'aide de coulis. Aucune protection n'est requise si l'appareil est installé sur une surface incombustible (ex : plancher de béton).*

Note 1 : La protection de plancher se limite au dégagement arrière (A) si ce dernier est inférieur à 8 pouces (203 mm).

Note 2 : Seulement requis sous la section horizontale du connecteur. Dois excéder d'au moins 2 pouces (51 mm) de chaque côté du connecteur.

Max Caddy Owner's manual French (page 24 of 79)

9.8. RACCORD DU TUYAU ET DU REGISTRE DE TIRAGE

Avant de faire le raccordement, retirer les accessoires tels le grattoir, la pelle et le tisonnier du tuvau d'évacuation de la fournaise.

La fournaise Max Caddy est munie d'une buse de 6" de diamètre et les modèles au bois seul ou combiné bois/électrique peuvent être installées sur une cheminée de 6" approuvée pour les appareils à combustible solide (2100°F); cependant, il est obligatoire de raccorder la Max Caddy à une cheminée de 7" de diamètre si sa conversion ultérieure en mode bois/huile est probable. Un réducteur de 7" à 6" est alors requis et doit être installé à la sortie de la fournaise. Si le tirage excède 0.06 PO. C.E., un contrôle barométrique doit être installé (voir *Registre de tirage*). **N'installez jamais de registre de cheminée manuel.** Il est préférable de fixer le tuyau d'évacuation à la buse de la fournaise à l'aide de trois vis.

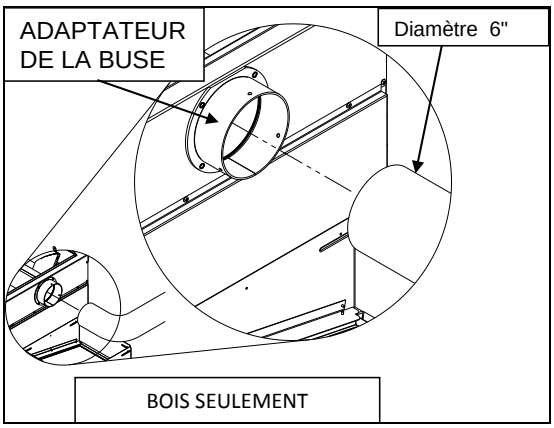

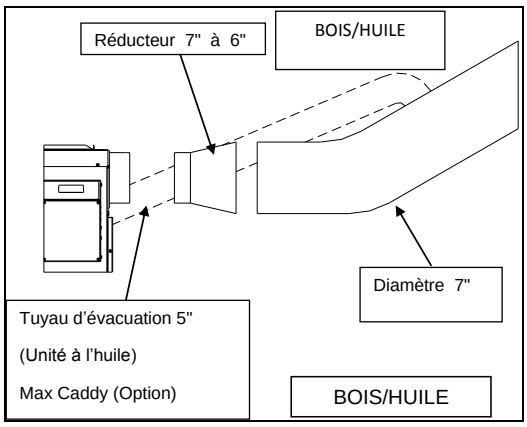

Voici quelques conseils pratiques pour une bonne installation :

- Tous les raccords du tuyau d'évacuation doivent être bien fixés à l'aide de trois vis.
- S'assurer que chaque vis de fixation pénètre bien dans les parois des deux raccords (mâle et femelle). Voir photos ci-dessous illustrant l'intérieur d'un accouplement mâle/femelle.
- Une pente ascendante minimale de 1/4" par pied doit être respectée sur la portion horizontale du conduit.

BONNE INSTALLATION	MAUVAISE INSTALLATION
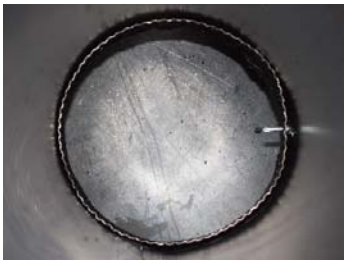	CAUSE UNE RESTRICTION

24

Max Caddy Owner's manual French (page 25 of 79)

9.9. RACCORDEMENT ÉLECTRIQUE

Les instructions qui suivent ne remplacent pas celles du code local.

Ne confier l'installation et la vérification de cet appareil qu'à une personne qualifiée.

Tout le câblage allant du panneau de service à l'unité de chauffage devra être conforme au code de l'électricité en vigueur et à tous les règlements locaux. Il est recommandé d'alimenter la fournaise avec son propre circuit électrique de 15 ampères à 120 volts muni d'un disjoncteur (Voir le schéma électrique).

9.10. REGISTRE DE TIRAGE

Un registre de tirage est nécessaire dans le cas d'un tirage qui excède 0.06 PO.C.E. Un contrôle barométrique doit être ajusté de façon à limiter le tirage maximum mesuré dans le tuyau d'évacuation à 0,06 PO.C.E. Veuillez noter que l'appareil pourrait s'emballer (feu incontrôlable) si le tirage excède 0,06 P.O.CE. **Par contre, le tirage minimum à respecter est de 0.04 PO.C.E. dans le tuyau d'évacuation du côté bois et ce, quel que soit le type de fournaise (MAX CADDY BOIS, MAX CADDY BOIS/ÉLECTRIQUE, MAX CADDY BOIS/HUILE).**

9.11. AIR DE COMBUSTION (INSTALLATION D'UNE ENTRÉE D'AIR FRAIS)

Dans la situation où la fournaise et la cheminée sont complètement froides, il peut être nécessaire avant l'allumage de fournir un apport d'air frais à l'appareil en ouvrant quelques instants une porte ou une fenêtre. Une maison construite ou rénovée de manière étanche est sujette à ne pas avoir le renouvellement d'air nécessaire au bon fonctionnement d'un appareil de chauffage à bois.

Dans ce cas, il faut éviter, à l'allumage, de faire fonctionner les appareils qui évacuent de l'air à l'extérieur de la maison, tels :

- Hotte de cuisinière
- Échangeur d'air
- Sécheuse
- Ventilateur de chambre de bain
- Balayeuse centrale ventilée

L'alimentation en air comburant neuf peut être nécessaire pour empêcher les appareils à combustibles solides de rejeter des produits de combustion dans la maison. Les indications servant à déterminer si un apport d'air comburant s'impose ne conviennent pas à toutes les situations. Dans le doute, il est recommandé d'assurer un apport d'air.
Un apport d'air comburant neuf peut s'imposer si :

- L'appareil à combustible solide présente des anomalies, tel : un tirage irrégulier, des retours de fumée, une mauvaise combustion et/ou un contre-tirage (qu'il y ait combustion ou non);
- Les appareils existants tels que foyers ou autres appareils de chauffage dégagent des odeurs, chauffent mal, causent des retours de fumée et/ou possèdent un contre-tirage, qu'il y ait combustion ou non;
- L'ouverture d'une fenêtre, même légère, par temps calme (sans vent) élimine chacun des problèmes mentionnés ci-haut;
- La maison est pourvue d'un pare-vapeur étanche et des fenêtres ajustées et/ou est dotée de dispositifs mécaniques d'évacuation de l'air intérieur;
- Il y a condensation excessive sur les fenêtres en hiver;
- La maison est munie d'un système de ventilation.

Si, selon ces indices ou d'autres symptômes semblables, il y a insuffisance d'air, il faut assurer un apport d'air comburant neuf.

L'alimentation en air comburant neuf peut se faire des façons suivantes, à condition qu'elles satisfassent au chapitre 5 de la norme CSA B365 :

- Raccordement direct : les appareils ne peuvent être raccordés directement à une source d'air comburant neuf que s'ils sont certifiés pour ce genre d'installation, laquelle doit respecter les instructions du fabricant. La Max Caddy possède un système d'entrée d'air frais étanche qui a été testé. Ce système est disponible en option. Informez-vous auprès de votre détaillant.
- Méthode indirecte : l'air neuf peut-être amené dans un conduit à au plus 300mm (12") de l'appareil afin de ne pas nuire à son fonctionnement;
- Système de ventilation mécanique : si la maison est munie d'un système de ventilation (changement d'air ou récupération de la chaleur), le système de ventilation peut être en mesure de fournir une quantité suffisante d'air d'appoint à l'appareil à combustible solide. Le propriétaire devrait être informé que le système de ventilation peut devoir être rééquilibré par un technicien en ventilation après l'installation de l'appareil à combustible solide.

Max Caddy Owner's manual French (page 26 of 79)

À NOTER :
Il est recommandé de faire installer une entrée d'air frais d'un minimum de 4" de diamètre dans la pièce ou près de la pièce où est installé l'appareil de chauffage (voir croquis ci-dessous). Pour ce faire, il est préférable de choisir un mur qui n'est pas exposé aux vents dominants, suivant les conditions environnantes autour de votre maison.

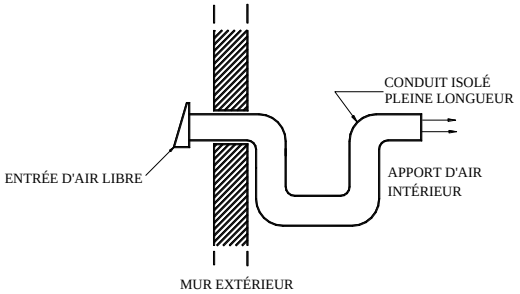

N.B. Le propriétaire de la fournaise est responsable de la salubrité du local en cas de pression négative ou temporairement négative.

Les ventilateurs d'extraction pouvant se trouver dans les pièces de stockage du combustible devraient être installés de manière à ne pas créer de dépression dans la pièce où se trouve l'appareil à combustible solide.

Pour plus d'information sur l'installation de l'entrée d'air frais optionnelle, consultez le feuillet de cette option.

9.12. PLÉNUM D'AIR CHAUD

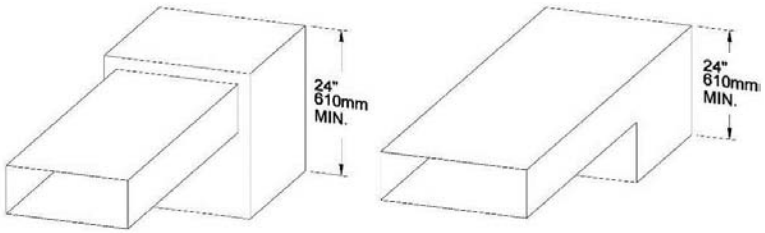

Le plénum d'air chaud sortant de la fournaise doit avoir une hauteur minimum de 24" (610 mm). Ces dimensions pour tous les générateurs d'air chaud rencontrent les exigences de la norme CAN/CSA B140.4, UL 391 et UL 727.

NOTE : POUR ASSURER UNE PRESSION STATIQUE ADÉQUATE, LE SYSTÈME DEVRAIT ÊTRE CONÇU DE SORTE QUE LE VOLUME DE RETOUR D'AIR FROID SOIT AU MOINS ÉGAL OU LÉGÈREMENT SUPÉRIEUR AU VOLUME D'AIR CHAUD DISTRIBUÉ.

9.13. INSTALLATION EN PARALLÈLE (ÉTATS-UNIS SEULEMENT)

L'installation en parallèle de la Max Caddy avec une autre fournaise qui utilise le même système de conduits d'air chaud n'est **pas permis au Canada**. **Ce type d'installation est seulement permis aux États-Unis**. Le BTU d'entré maximum de la fournaise existante à huile, à gaz ou électrique doit être égal ou supérieur au BTU d'entré maximum de la fournaise Max Caddy. Il est obligatoire de respecter les dégagements minimaux entre les conduits d'air chaud et les matériaux combustibles comme si la fournaise Max Caddy était installée seule. Les conduits d'air chaud et la fournaise doivent être ajustés de telle sorte que la pression statique soit au moins de 0.2 po de colonne d'eau mais ne doit pas dépasser 0.5 po de colonne d'eau. Un registre de refoulement doit être installé dans le plénum d'air chaud pour prévenir le retour d'air chaud dans la fournaise qui n'est pas en fonction. Selon votre installation un registre de refoulement peut être nécessaire dans chacun des plénums d'air chaud.

CANADA; L'installation en parallèle i-e que la Max Caddy est jumelée à une autre fournaise et qu'elles utilisent le même système de conduits d'air chaud **n'est pas permise au Canada**.

ÉTATS-UNIS; L'installation en parallèle i-e que la Max Caddy jumelée à une autre fournaise et qui utilisent le même système de conduits d'air chaud est permise aux États-Unis.

Max Caddy Owner's manual French (page 27 of 79)

Conditionnellement à ce que;

- La puissance d'entrée maximale de la fournaise à gaz, à l'huile ou électrique existante devrait être égale ou inférieur à 120 000 Btu/h.
- Les dégagements requis pour la fournaise à bois doivent être respectés.
- Les dégagements entre les conduits d'air chaud et les matériaux combustibles doivent rencontrer les valeurs les plus élevées entre les deux fournaises.
- Les ajustements nécessaires soient apportés à la fournaise ou aux conduits d'air chaud afin de maintenir une pression statique se situant entre 0.20 et 0.50 PO.CE.
- Un registre anti-retour (« back flow damper ») doit être installé afin de prévenir un retour d'air dans l'une ou l'autre des deux fournaises et de s'assurer que l'air chaud circulera dans la maison et ne retournera pas à travers le plenum de l'autre fournaise. Selon votre configuration d'installation, il est possible que plus d'un registre soit requis pour prévenir les retours d'air dans les différents conduits d'air chaud.

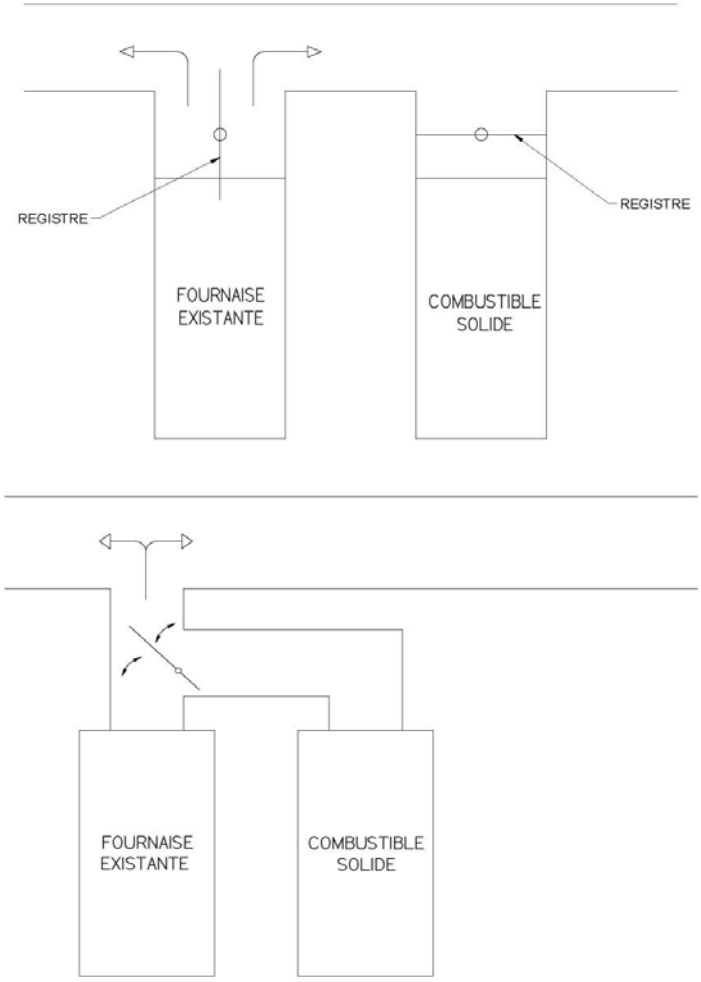

Pour assurer une installation sécuritaire, les deux fournaises ne doivent en aucun temps fonctionner en même temps. Pour y arriver, le thermostat contrôlant la fournaise existante doit être également relié à votre fournaise Max Caddy. De

Max Caddy Owner's manual French (page 28 of 79)

cette manière, lorsqu'un signal de chauffage sera envoyé à la fournaise existante, la fournaise Max Caddy recevra le même signal qui lui indiquera de ne pas se mettre en marche ou de se mettre en cycle d'arrêt si elle était déjà en fonctionnement au moment de la demande en chauffage du thermostat de la fournaise existante.

Le raccordement pour une installation en annexe est montré ci-dessous. Le thermostat de la fournaise existante doit être relié aux bornes **Rh** et **Aux** de la carte liaison sur la fournaise Max Caddy. Ces deux fils doivent provenir des bornes **R** et **W.**

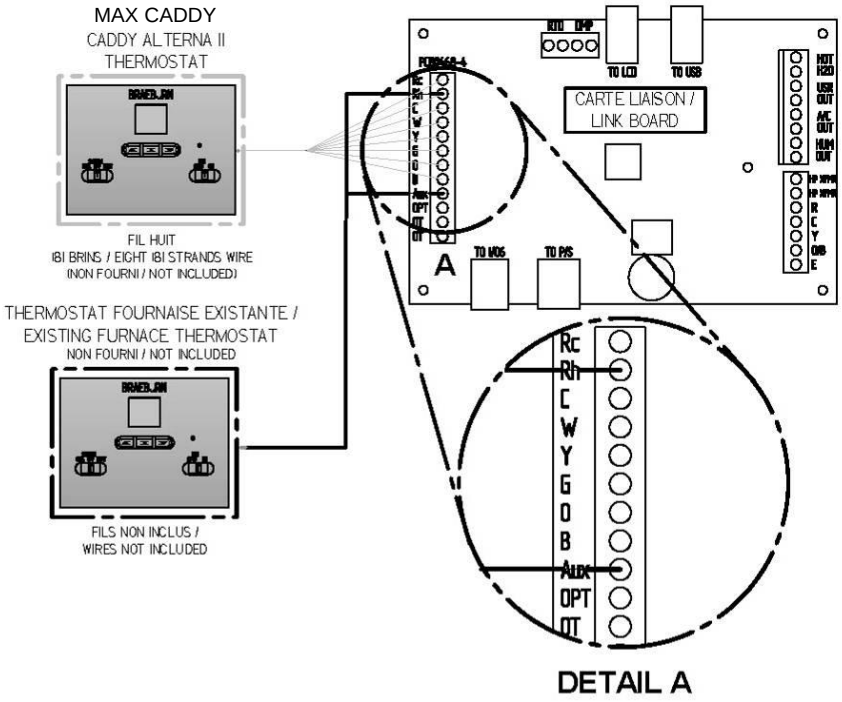

Lors d'une demande de chauffage provenant du thermostat de la fournaise existante, la fournaise Max Caddy se mettra en arrêt et une enveloppe s'affichera à l'écran vous avertissant que la fournaise existante a pris le relais. Cette enveloppe disparaîtra lorsque la demande en chauffage du thermostat de la fournaise existante cessera et la fournaise Max Caddy recommencera à suivre les commandes provenant de son thermostat.

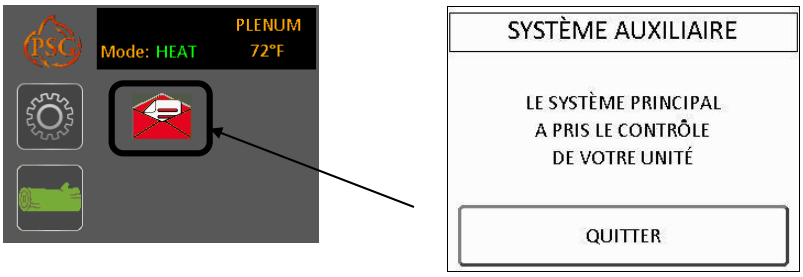

28

Max Caddy Owner's manual French (page 29 of 79)

9.14. INSTALLATION DE L'ÉLÉMENT ÉLECTRIQUE (OPTIONNEL)

9.14.1. INTRODUCTION

Deux éléments électriques sont disponibles pour la Max Caddy : 20kW et 25 kW. Ces options comprennent toutes les composantes nécessaires au montage de l'appareil dans cette configuration. Les instructions d'installation de l'option électrique se trouvent avec l'élément électrique.

ATTENTION : UTILISEZ DES FILS (NON INCLUS) APPROUVÉS POUR 75 °C OU PLUS.

9.14.2. BRANCHEMENT

MODÈLE	DÉBIT THÉORIQUE	TEMP. VAR. (°F)	BTU/H ENTRÉE	AMPÈRES TOTAL	DISJ. REQUIS	ALIMENT. CALIBRE	VOLTAGE 1 PHASE	NBRE ÉLÉMENTS
20 kW	2,100	75	68,240	85	125 amps	3	120/240	4 x 5 kW
25 kW	2,100	85	85,325	100	150 amps	2	120/240	5 x 5 kW
BOIS	2,100	100	180,000	5	15 amps	14	120	N/A

Les raccordements électriques doivent être conformes au plan électrique, lequel est fourni avec l'élément électrique.

L'élément électrique doit être branché à la carte de puissance (voir le schéma électrique de votre unité électrique ou la Section 17 - SCHÉMA ÉLECTRIQUE POUR UNITÉ ÉLECTRIQUE
) Pour des raisons de sécurité, l'élément électrique possède un capteur thermostatique à redémarrage manuel situé à l'intérieur de l'élément électrique. Si la température de l'élément électrique excède la limite, le capteur thermostatique désactivera l'élément. Après avoir découvert et réglé le problème ayant causé la surchauffe de l'appareil (pression statique trop élevée, bris du ventilateur, etc.), réactivez en appuyant sur le bouton rouge de redémarrage manuel sur le capteur thermostatique (thermodisque L-170).

VUE INTERNE DE L'ÉLÉMENT ÉLECTRIQUE

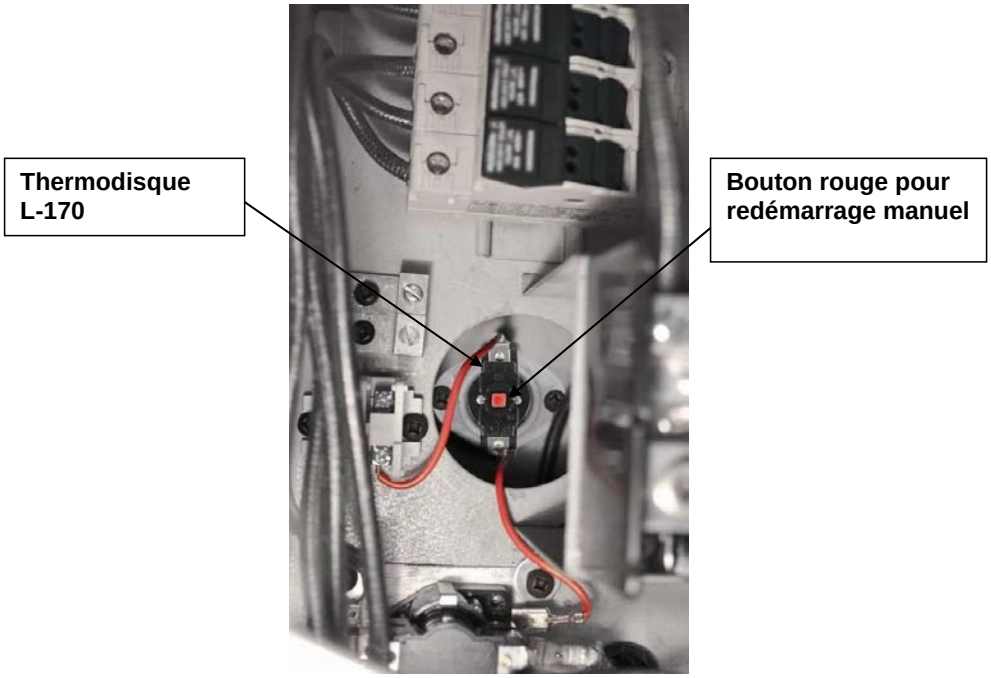

Max Caddy Owner's manual French (page 30 of 79)

10. INSTALLATION DU THERMOSTAT

10.1. FOURNAISE À BOIS SEULEMENT

Votre fournaise doit être raccordée à un thermostat. Vous pouvez utiliser le thermostat fourni avec l'appareil ou un thermostat déjà installé dans votre résidence. Le thermostat doit être installé sur un mur intérieur de la maison, dans un endroit où il sera le moins affecté par les courants d'air provenant d'une sortie d'air. Le thermostat doit être installé à un minimum de 55 pouces (140cm) au-dessus du plancher.

Il est recommandé de relier le thermostat à la fournaise à l'aide d'un fil sept ou huit brins reliant les terminaux Rc, Rh (relier un seul des deux terminaux R si un cavalier est présent entre Rc et Rh sur le thermostat), C, W, Y, G, O et B. Si le thermostat utilise un contact sec (alimentation par pile), il n'est pas nécessaire de raccorder le terminal commun (C) au thermostat. Référez-vous au schéma électrique.

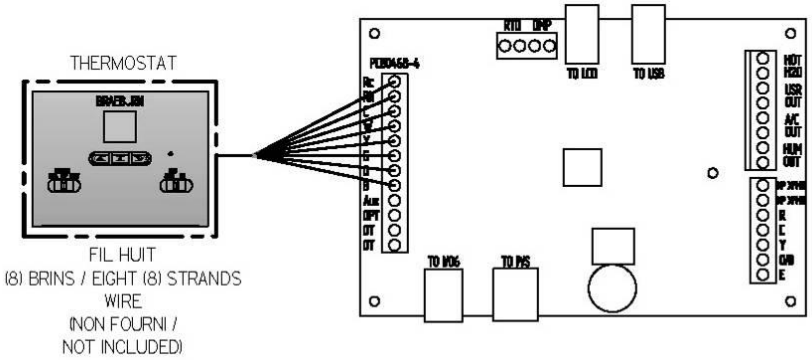

Une fois relié à la fournaise, il est possible de vérifier les signaux provenant du thermostat mural. Sur l'écran tactile, sélectionner « DÉPANNAGE LIAISON » à la page 1 tel que montré ci-dessous. Lorsqu'un signal est envoyé du thermostat, le cercle correspondant au signal devrait apparaître de couleur vert.

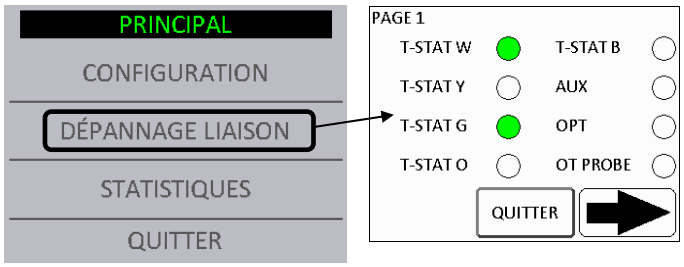

10.1.1. FOURNAISE COMBINÉE BOIS-ÉLECTRIQUE OU BOIS-HUILE

Un seul thermostat est nécessaire pour contrôler la fournaise à bois ainsi que le chauffage auxiliaire. L'installation se fait donc de la même manière que pour une fournaise au bois seulement. Voir la Section 11.4.1 - TRANSITION VERS UN CHAUFFAGE AUXILIAIRE pour en connaître le fonctionnement.

10.1.2. FOURNAISE COMBINÉE BOIS-ÉLECTRIQUE-HUILE

Un seul thermostat est nécessaire pour contrôler la fournaise à bois ainsi que le chauffage auxiliaire. L'installation se fait donc de la même manière que pour une fournaise au bois seulement. Voir la Section 11.4.1 - TRANSITION VERS UN CHAUFFAGE AUXILIAIRE pour en connaître le fonctionnement.

Max Caddy Owner's manual French (page 31 of 79)

10.2. INSTALLATION D'UN CLIMATISEUR

La fournaise Max Caddy a été testée avec une option de climatiseur. Si cette option est choisie, nous suggérons une installation selon le schéma présenté ci-dessous.

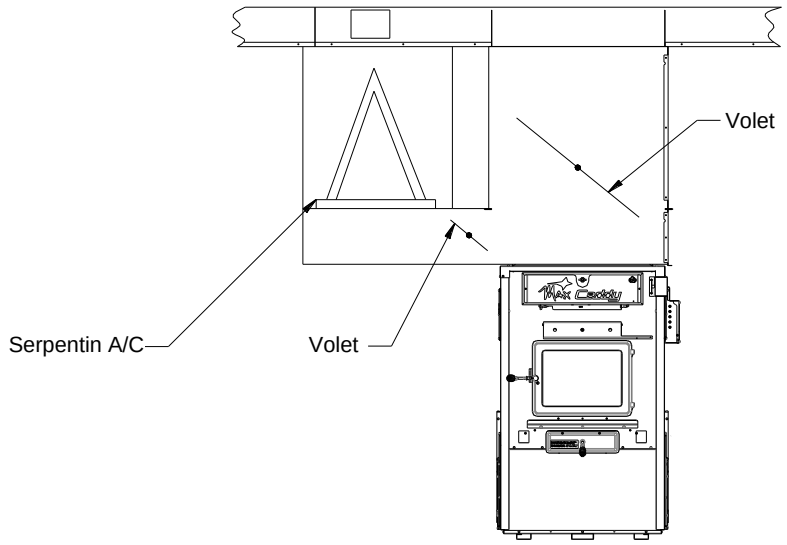

Il s'agit de la façon la plus efficace et la plus sécuritaire d'installer un serpentin de climatiseur qui utilisera le système de ventilation de la Max Caddy en été. Pour l'installation d'un climatiseur, le thermostat principal devra être de type double fonction (« heat/cool »). De plus, la vitesse d'opération du ventilateur de distribution de la fournaise en mode air climatisé devra être programmée sur l'écran tactile dans le menu vitesse ventilateur (voir Section 11.5 - CONFIGURATION DES VITESSES DU VENTILATEUR DE DISTRIBUTION).

Il est à noter qu'au moment de la demande en climatisation par le thermostat, le ventilateur de la fournaise démarrera immédiatement à la vitesse configurée. Pour le raccordement du volet d'air climatisé, se référer au schéma des connections (Section 28 - RACCORDEMENTS OPTIONS CARTE LIAISON).

La capacité du climatiseur et les caractéristiques du modèle testé avec la MAX Caddy sont indiquées plus bas. L'installation d'une autre marque équivalente ne pose pas de problème.

Marque du condensateur : Goodman GSX3048
Capacité : 4 tonnes
Type de serpentin : *Type A, CAUF Indoor Coil*

10.3. INSTALLATION D'UNE THERMOPOMPE

Il est possible de raccorder une thermopompe à la fournaise Max Caddy. Pour déterminer la priorité d'opération de ces deux modes de chauffage, voir la Section 11.4.3 - PRIORISATION DES SOURCES DE CHAUFFAGE.

Pour le raccordement de la thermopompe à votre fournaise, voir la section 28.7 - THERMOPOMPE.

NOTE : Si une thermopompe est raccordée à la fournaise Max Caddy, un élément électrique doit être installé au système pour assurer un chauffage auxiliaire (PA08535 (20kW), PA08545 (25kW).

Pour l'installation du serpentin d'air climatisé, vous référer à la Section 10.2 - INSTALLATION D'UN CLIMATISEUR.

Max Caddy Owner's manual French (page 32 of 79)

10.4. INSTALLATION D'UN SYSTÈME DE PRÉCHAUFFAGE DE L'EAU DOMESTIQUE ET D'UN HUMIDIFICATEUR

Un serpentin servant à préchauffer l'eau domestique est disponible en option. Lorsque la fournaise fonctionne, la chaleur produite peut ainsi être utilisée pour préchauffer l'eau domestique qui sera stockée dans un réservoir tampon avant de passer dans votre chauffe-eau existant. Ce serpentin se glisse entre l'échangeur de chaleur et le dessus de la chambre à combustion de la fournaise et un panneau amovible est prévu de chaque côté de la fournaise pour une installation facile et rapide. Une valve solénoïde 24 volts doit être installée à l'entrée du serpentin et elle sera raccordée au bornier HOT H_20 de la carte électronique; lorsque la température du bonnet d'air chaud atteindra 120 °F, la valve ouvrira pour laisser circuler l'eau. Elle se fermera lorsque la température redescendra en bas de 100 °F afin d'éviter le refroidissement de la chambre à combustion lorsque la fournaise fonctionne à bas régime. Voir section 28.3 - OPTION EAU CHAUDE pour le branchement à la carte électronique. Les instructions complètes pour l'installation et le fonctionnement de l'option du serpentin d'eau chaude sont fournies avec l'option.

NOTE : N'INSTALLEZ JAMAIS D'ALIMENTATEUR AUTOMATIQUE

Le bornier HUM OUT peut également être utilisé pour alimenter le relais 24 volts d'un humidificateur installé au système. L'humidificateur sera alors activé et désactivé aux mêmes températures que la valve solénoïde du serpentin (120°F et 100°F). Voir section 28.6 - HUMIDIFICATEUR pour le branchement à la carte électronique.

Pour vérifier le statut (ouvert ou fermé) de la valve/relais voir la section 14.1 - VÉRIFICATION DE L'ÉTAT DE FONCTIONNEMENT D'UNE COMPOSANTE.

11. INSTRUCTIONS DE CONFIGURATION ET D'OPÉRATION

11.1. SYSTÈMES DE CONTRÔLE

La fournaise Max Caddy est dotée d'un contrôle électronique sophistiqué. Ce système est plus polyvalent. Tous les branchements se font à partir de la carte électronique. Des borniers sont prévus pour toutes les composantes et les options.

Avant de débuter la configuration de votre système, assurez-vous que votre thermostat mural est bien raccordé à la fournaise, que le capteur de température (RTD) est bien installé dans le plénum d'air chaud, qu'il est raccordée à la carte liaison et que votre système de distribution d'air chaud est complet.

La fournaise Max Caddy utilise un écran tactile; une technologie de pointe dans les dispositifs de contrôle. Le ventilateur, les options et la trappe d'entrée d'air sont contrôlés à partir de cet écran.

Il est important de noter que votre Max Caddy est muni de trois composantes électroniques majeures : la carte liaison, la carte de puissance et l'écran tactile. La carte de puissance est déjà installée dans le boîtier du ventilateur.

La carte de puissance est utilisée pour fournir le courant aux différentes composantes électriques, en particulier :

- Alimenter les différentes cartes électroniques de la fournaise en courant;
- Raccorder le ventilateur de distribution;
- Raccorder les séquenceurs de l'élément électrique;
- Raccorder le contact du bruleur à l'huile.

La carte liaison est utilisée plus précisément pour :

- Raccorder le capteur de température du plénum d'air chaud (type RTD);
- Raccorder le thermostat;
- Raccorder les équipements complémentaires;
- Raccorder une thermopompe.

L'écran tactile est utilisé pour l'opération du système. Il est utilisé plus précisément pour :

- Sélectionner les paramètres de combustion;
- Sélectionner les options utilisées;
- Visionner la température du plénum d'air chaud;
- Sélectionner la priorité de chauffage;
- Sélectionner la langue et les unités;
- Consulter les statistiques;
- Sélectionner les vitesses de ventilateur de distribution pour les différents modes;
- Accéder au dépannage afin de détecter les problèmes de l'appareil.

Max Caddy Owner's manual French (page 33 of 79)

11.2. CONFIGURATION DU SYSTÈME

Une fois l'installation terminée et avant d'utiliser l'appareil, la fournaise devra être configuré pour activer toutes les fonctions applicables selon les options choisies. Pour ce faire, il est important de connaître les options installées sur votre fournaise.

11.3. ÉCRAN TACTILE

L'écran tactile est un affichage électronique visuel qui s'active au toucher. Lorsque la fournaise est en fonction, la page d'accueil principale affiche les différentes icônes d'opérations. Lorsque la fournaise n'est pas en fonction seulement l'icône de réglages s'affiche.

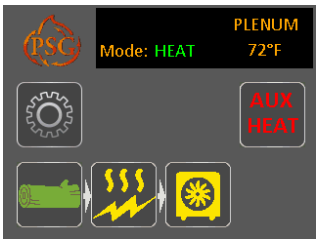

Page d'accueil - Fournaise en fonction

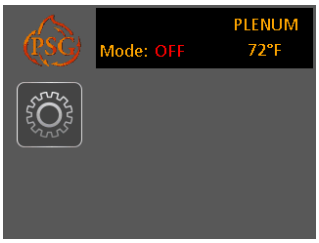

Page d'accueil - Fournaise hors fonction

11.3.1. DESCRIPTION DES ICÔNES

Icônes	Description	Icônes	Description
	Chauffage au bois Vert : En mode chauffage Jaune : En mode chauffage auxiliaire		Élément électrique Vert : En fonction Jaune : En attente d'une demande
	Thermopompe Vert : En fonction Jaune : En attente d'une demande		Unité à l'huile Vert : En fonction Jaune : En attente d'une demande
	Réglages		S'affiche lorsqu'une source de chauffage auxiliaire a été sélectionnée.
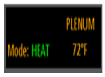	Température dans le plénum		Le ventilateur de distribution est en mode circulation (CIRC)
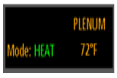	États possibles de la fournaise : HEAT : Lorsque le mot HEAT est en vert, la fournaise est en mode chauffage. Si la fournaise est en attente d'une demande en chauffage, le mot HEAT sera écrit en jaune. COOL : Lorsque le mot COOL est en vert, la fournaise est en mode climatisation. Si la fournaise est en attente d'une demande en climatisation, le mot COOL sera écrit en jaune. OFF : La fournaise est arrêtée.		

Max Caddy Owner's manual French (page 34 of 79)

11.3.2. SÉLECTION DE LA LANGUE ET DE L'UNITÉ DE TEMPÉRATURE

Pour choisir la langue ainsi que l'unité de température, appuyez sur le bouton «Réglage». Dans le menu « Principal » choisir « Configuration » puis « Général ». Choisir le langage et l'unité de température voulue.

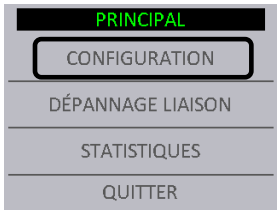

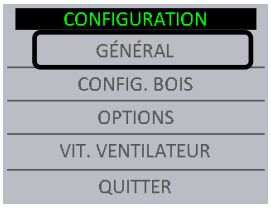

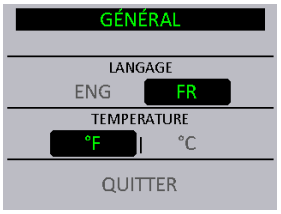

11.4. AJOUT DE SOURCE DE CHAUFFAGE AUXILIAIRE ET SÉLECTION DES OPTIONS

Pour ajouter une source de chauffage auxiliaire ou pour ajouter des options sur votre fournaise, appuyez sur le bouton «Réglage».

Sur la page « Principal » choisir « Configuration » puis « Options » et « Sélection ». Par défaut, aucun chauffage auxiliaire ni options n'est sélectionnée. Pour choisir une option, simplement appuyer sur le carré blanc à gauche de l'option voulue. Lorsqu'une option est choisie, le carré de sélection devient vert.

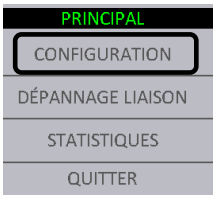

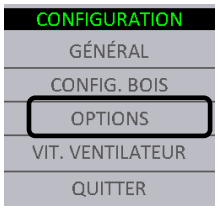

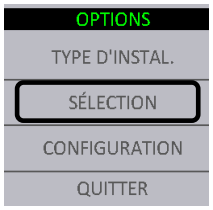

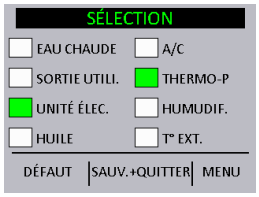

Pour confirmer la sélection de vos options, appuyez sur le bouton ''SAUV+QUITTER''. Cette étape vous mènera à une liste de questions concernant vos sélections qui sont essentielles au bon fonctionnement de celles-ci.

11.4.1. TRANSITION VERS UN CHAUFFAGE AUXILIAIRE

Lors d'une demande en chauffage, la fournaise vérifie la température dans le plénum. Si la température est au-delà du KIP, le ventilateur se mettra en marche. Si la température est de dessous du KIP, la fournaise attendra le délai du « Rise Time » et vérifiera la température à nouveau dans le plénum. Si la température dans le plenum a augmenté de 20 °F mais n'a pas atteint le KIP, la fournaise attendra un délai supplémentaire (celui du « KIP Time ») et revérifiera la température dans le plénum. Si la température n'a toujours pas atteint le KIP, le chauffage auxiliaire démarrera. L'icône « Bois » deviendra jaune et celui du chauffage auxiliaire deviendra vert.

Dans le cas de l'option électrique et/ou l'huile, le ventilateur démarre aussitôt que la demande de chauffage est activée par le thermostat de l'option. En d'autres mots, par mesure de sécurité, le ventilateur n'attend pas que le plénum d'air chaud ait atteint une température minimale prédéterminée.

La fournaise garde en mémoire quelle source de chauffage a été utilisée lors de la dernière demande du thermostat. Si la dernière demande en chauffage a été comblée par le chauffage auxiliaire, la fournaise partira automatiquement celui-ci.

Pour repartir la fournaise en mode bois, vous devrez aller sur l'écran tactile à la page principale et sélectionner le mode bois. L'icône redeviendra vert et celui du chauffage auxiliaire deviendra jaune.

11.4.2. AJUSTEMENT DES PARAMÈTRES DE TRANSITION VERS LE CHAUFFAGE AUXILIAIRE

Il est possible d'ajuster légèrement les paramètres de transition du bois vers une source de chauffage auxiliaire. Pour ce faire, allez sur la page « PRINCIPAL » de l'écran tactile sous l'option « CONFIGURATION » et choisir « CONFIG. BOIS ». Sur cette page, il est possible de modifier le KIP, le KOP, le Rise Time et KIP Time.

KIP (Kick-In point) : Température du plenum où le ventilateur se met en marche.

KOP (Kick-Out point) : Température du plenum où le ventilateur s'arrête.

Rise Time : Temps alloué pour que la température du plenum augmente de 20°F.

KIP Time : Temps supplémentaire alloué pour atteindre le KIP lorsque le Rise Time s'est terminé par une augmentation de 20°F.

Max Caddy Owner's manual French (page 35 of 79)

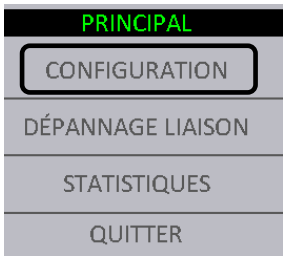

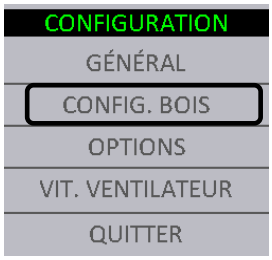

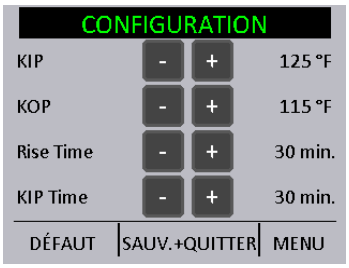

11.4.3. PRIORISATION DES SOURCES DE CHAUFFAGE

Si vous avez configuré une ou des sources de chauffage auxiliaires (élément électrique, thermopompe, huile), vous devez choisir l'ordre de priorité de celles-ci lors d'une demande de chauffage. Si, par exemple, le chauffage au bois ne fournit plus suffisamment de chaleur, le chauffage auxiliaire sélectionné en 1 prendra la relève. Si la priorité 1 ne fournit plus assez de chaleur, ou suffisamment rapidement, la priorité 2 prendra la relève. Les priorités de chauffage se choisissent dans le menu « PRINCIPAL », sous l'option « CONFIGURATION ». Choisir « OPTIONS » et « CONFIGURATION » à nouveau. Utiliser les flèches pour choisir l'ordre de priorité.

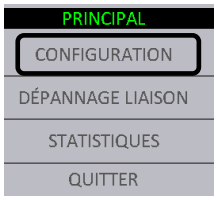

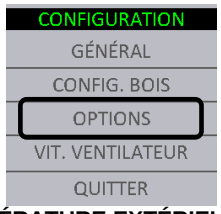

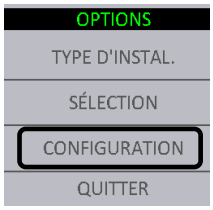

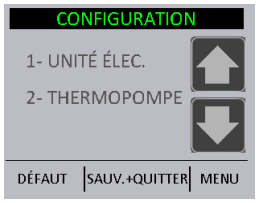

11.4.4. CAPTEUR DE TEMPÉRATURE EXTÉRIEURE

Il est possible de raccorder un capteur de température extérieure sur la Max Caddy. Ce capteur de température sert principalement à diminuer la consommation d'électricité et réduire la facture en priorisant la transition vers une source de chauffage auxiliaire lorsqu'il fait trop froid ou lorsque que c'est la période de surfacturation (pic d'utilisation), dépendamment du fournisseur d'électricité.

THERMOPOMPE : Avec une combinaison bois, élément électrique et thermopompe vous pouvez configurer votre capteur de température pour ne plus utiliser votre thermopompe lorsqu'il fait trop froid et que le coefficient de performance devient trop faible. (Il faut donc prioriser l'élément électrique lors de l'installation du capteur de température extérieure.)

Lorsque le capteur de température est en fonction, le mode « ECO » s'affichera sur la page d'accueil.

11.4.4.1. CONFIGURATION BI-ÉNERGIE

La sélection biénergie est utile dans le cas où une entreprise locale de distribution d'énergie (Hydro-Québec par exemple) offre un programme de tarifs biénergie qui requiert que l'appareil soit muni d'un contrôle électronique garantissant l'utilisation d'une énergie donnée (ex : l'électricité) en fonction d'un critère donné (par exemple, la température extérieure).

En mode biénergie, le capteur de température (contact normalement ouvert) est reliée à la carte électronique (voir section 28.2 - SONDE EXTÉRIEURE). Le contact demeurera ouvert tant que la température extérieure se situera au dessus d'une valeur donnée (valeur programmée dans le système de contrôle du fournisseur d'énergie). Tant que le contact demeurera ouvert, c'est l'unité électrique qui fonctionnera comme première option si le bois n'est pas en mesure de satisfaire la demande en énergie. Si, par contre, la température s'abaisse sous la valeur de référence, le contact fermera et c'est l'unité à l'huile qui se mettra en marche comme première option.

Max Caddy Owner's manual French (page 36 of 79)

11.5. CONFIGURATION DES VITESSES DU VENTILATEUR DE DISTRIBUTION

Il est possible d'ajuster la vitesse du ventilateur de distribution pour le mode circulation, climatisation ainsi que pour les différents modes de chauffages auxiliaires.

NOTE : Lors du chauffage au bois, les vitesses du ventilateur de distribution sont programmées dans le but de fournir le meilleur échange thermique et ne peuvent être modifiées.

Il est possible d'ajuster la vitesse du ventilateur en mode « CIRCULATION » à tout moment en allant dans le menu « PRINCIPAL », sous l'option « CONFIGURATION » et « VIT. VENTILATEUR ».

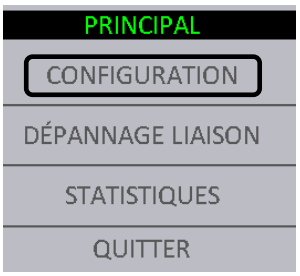

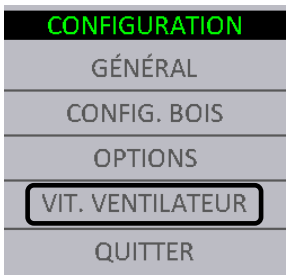

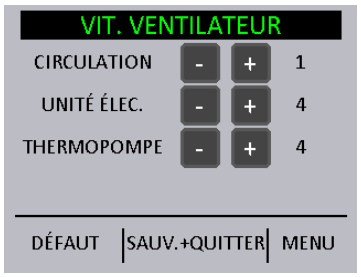

L'ajustement de la vitesse pour les autres modes de chauffage est accessible seulement si le mode a été activé. Les vitesses sélectionnées dans ce menu seront les vitesses utilisées dans le mode « CIRC », mode « COOL » et mode « HEAT ».

L'ajustement de tous les contrôles doit être fait par un technicien compétent. Les réglages des contrôles et la vitesse du ventilateur doivent être conformes aux recommandations de la CMMTQ.

11.5.1. LES VITESSES

Votre fournaise est munie d'un ventilateur à 4 vitesses. À l'aide du contrôle électronique, nous avons créé 6 vitesses d'utilisation. Référez-vous au tableau suivant pour connaître les vitesses d'utilisation disponibles.

Vitesse d'utilisation	Correspondance	PCM*	PRESSION STATIQUE
1	Vitesse 1 du moteur utilisé à 98V	600	0.2" H2O
2	Vitesse 1 du moteur utilisé à 115V	760	0.2" H2O
3	Vitesse 2 du moteur utilisé à 98V	840	0.2" H2O
4	Vitesse 2 du moteur utilisé à 115V	950	0.2" H2O
5	Vitesse 3 du moteur utilisé à 115V	1150	0.2" H2O
6	Vitesse 4 du moteur utilisé à 115V	1260	0.2" H2O

*Ces valeurs ont été mesurées à la sortie d'un plénum d'air chaud lors d'essai en laboratoire. Elles peuvent varier en fonction de la configuration et de l'installation.

Max Caddy Owner's manual French (page 37 of 79)

11.6. BALANCEMENT DU SYSTÈME

Il est important de faire appel à un installateur professionnel afin de faire l'installation de la fournaise et le balancement du circuit de distribution d'air. Certaines vérifications doivent être faites et certaines règles doivent être respectées afin de ne pas endommager le moteur du ventilateur.

Vous devez procéder au balancement du système lorsque toutes les composantes sur la fournaise sont installées et que les conduits de distribution d'air sont raccordés aux différentes pièces de la maison. Pour ce faire, démarrez le moteur du ventilateur allant dans le menu « DÉPANNAGE LIAISON » à la « PAGE 5 – VIT. VENTILATEUR ». Sélectionner la vitesse 4.

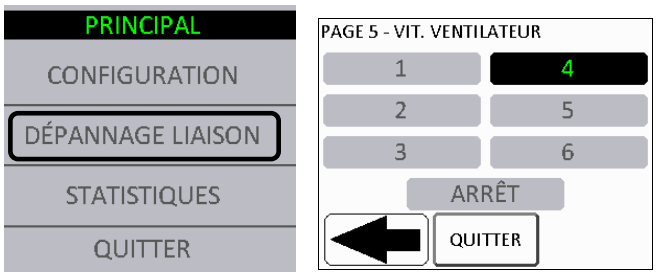

Il est important de respecter la vitesse de déplacement dans le conduit principal, les conduits secondaires, ainsi que la vélocité aux sorties dans les pièces. La pression statique de votre système doit être ajustée à au moins 0.2" de colonne d'eau (PO. C.E.) et ne pas excéder 0.5" de colonne d'eau. Finalement, assurez-vous de ne jamais excéder l'ampérage à charge pleine du moteur.

11.7. FONCTIONNEMENT DES DIFFÉRENTS MODES

11.7.1. CHAUFFAGE (mode HEAT)

Lorsque la température dans votre maison descend sous la valeur à laquelle votre thermostat mural est programmé, un signal est envoyé à votre fournaise par le biais de la carte électronique. La carte activera le volet d'admission d'air situé à l'avant de la fournaise et procurera une alimentation d'air accrue à votre feu. Le capteur de température (RTD), situé dans le plénum d'air chaud de votre fournaise, lit la température en continu. Lorsque la température atteint la valeur de départ sélectionnée par l'usager (KIP), le ventilateur de distribution se met alors en fonction à la vitesse minimale. Par la suite, le ventilateur augmentera sa vitesse lorsqu'il atteindra le point d'efficacité maximale (BEP – *Best Efficiency Point*) déterminé par le manufacturier. La température dans le plénum d'air chaud est donc contrôlée par le capteur de température. Si la température dans le plénum d'air chaud excède la limite maximale déterminée par le manufacturier, le ventilateur passera automatiquement à sa vitesse maximale et le volet d'admission d'air de la fournaise fermera afin de ralentir la combustion. Lorsque la température reviendra à un niveau sécuritaire, le ventilateur retournera graduellement (et de façon automatique) à la vitesse nécessaire pour maintenir le BEP.

11.7.2. CLIMATISATION (mode COOL)

Lors de l'installation de l'air conditionné, la carte électronique devra être reliée à un thermostat mural double fonction (air conditionné et chauffage ou « HEAT/COOL») afin de synchroniser le départ du moteur de distribution de la fournaise avec le départ du condenseur de l'air conditionné. Lors du signal de thermostat mural, le moteur de distribution se mettra en fonction à la vitesse sélectionnée par l'utilisateur.

11.7.3. CIRCULATION (Mode CIRC)

Ce mode est utilisé pour faire circuler l'air de la maison lors de la saison estivale. Ainsi, vous profiterez de votre circuit de distribution d'air pour faire circuler l'air frais de votre sous-sol dans toute la maison. Pour activer le mode circulation, mettre le thermostat en mode FAN-ON.

Max Caddy Owner's manual French (page 38 of 79)

11.8. CHAUFFAGE AU BOIS

11.8.1. ALLUMAGE

1. Ouvrez la porte

   Note: Dans le cas où la fournaise contient déjà un fond de braises, passez à l'étape « préchauffage ».

2. Placez une ou deux éclisses de bois sec vers l'avant de la fournaise.

3. Placez du papier journal déchiré en bandes au-dessus des éclisses.

4. Recouvrez le papier journal d'éclisses et de quelques petites pièces de bois sec entrecroisées.

5. Recouvrez de papier journal déchiré en bandes puis allumer à deux ou trois endroits, le plus bas possible, en laissant la porte ouverte de 1/2" (13 mm). Si l'allumage est manqué, il peut y avoir un refoulement de fumée par les entrées d'air.

11.8.2. PRÉCHAUFFAGE

1. Une fois le bois d'allumage bien enflammé ou le fond de braises activé, déposez par-dessus 2 à 3 quartiers de bois sec de manière à favoriser l'écoulement des flammes entre les pièces de bois (les arêtes pointues et fendillées offrent un meilleur temps d'embrasement que les faces pleines ou recouvertes d'écorce), puis fermez la porte. Il est important de respecter ce mode de chargement pour que le bois brûle comme une cigarette, de l'avant vers l'arrière de la fournaise.

2. Attendre ainsi de 15 à 20 minutes, puis procédez au chargement de la fournaise.

11.8.3. CHAUFFAGE

1. Au moment du chargement, faites descendre les pièces de bois embrasées et placez-les au centre de la chambre à combustion avant d'insérer les autres pièces de bois.
2. Évitez de charger à l'excès. L'air doit circuler librement à la partie supérieure de la chambre à combustion pour un bon fonctionnement de l'appareil. On doit noter qu'un feu intense produira beaucoup moins de résidus qu'un feu étouffé.

IMPORTANT: LORS DU CHARGEMENT, TOUJOURS ENLEVER LA CENDRE ET LE BOIS QUI POURRAIT OBSTRUER LES ENTRÉES D'AIR SITUÉES SOUS LA PORTE À L'INTÉRIEUR DE LA CHAMBRE À COMBUSTION.

PROCÉDURE D'OUVERTURE DE LA PORTE DE CHARGEMENT

POUR DIMINUER LE RISQUE DE RETOUR DE FUMÉE, ENTROUVRIR LA PORTE ET ATTENDRE ENVIRON 10 SECONDES AVANT DE L'OUVRIR COMPLÈTEMENT AFIN DE STABILISER LA PRESSION INTÉRIEURE DE VOTRE FOURNAISE.

11.8.4. LES PREMIÈRES INDICATIONS D'UNE SURCHAUFFE

- Le feu gronde;
- Le connecteur de cheminée devient rouge;
- Une chaleur extrême émane de l'appareil. Si cela se produit, **NE PAS OUVRIR LA PORTE**. Fermez complètement l'entrée d'air et attendez que le feu diminue d'intensité.

ATTENTION
TOUJOURS MAINTENIR LA PORTE ET LE CENDRIER FERMÉS (SAUF POUR L'ALLUMAGE ET L'ENTRETIEN).

Max Caddy Owner's manual French (page 39 of 79)

11.8.5. LE BOIS COMME COMBUSTIBLE DE CHAUFFAGE

ATTENTION

NE JAMAIS FAIRE BRÛLER DE DÉCHETS, DE LA GAZOLINE, DU NAPHTA, DE L'HUILE À MOTEUR OU TOUT AUTRE PRODUIT SEMBLABLE.

Vous devez chauffer votre fournaise avec du bois de corde sec seulement.

Il y a deux facteurs importants qu'il faut considérer dans le choix du bois : le pourcentage d'humidité et la densité du bois. Les bois durs comme l'érable, le chêne et le hêtre donnent de meilleurs résultats grâce à leur contenu calorique élevé et le minimum de goudron qu'ils produisent durant la combustion. Il est fortement recommandé de faire sécher votre bois six mois avant l'usage en l'exposant au soleil et à l'air libre tout en le protégeant des intempéries.

N'UTILISEZ PAS DE CHARBON POUR CHAUFFER CET APPAREIL.

Si vous constatez une quantité anormale de fumée dans un appartement, il faut :

1. Ouvrez les portes et les fenêtres.
2. Assurez-vous que la porte de la fournaise et le registre d'admission d'air sont bien fermés (si nécessaire, abaissez le point de consigne du thermostat à bois ou débranchez la chaîne du registre et **FERMEZ** manuellement le contrôle barométrique).
3. Lorsque la fournaise est refroidie, inspectez le connecteur de cheminée et la cheminée pour déceler les obstructions ou consultez un spécialiste pour déterminer la cause de l'épanchement de fumée.

11.8.6. PANNE DE COURANT PROLONGÉE

En cas de panne de courant prolongée (plus de 10 minutes), afin de réduire le risque de surchauffe, il est recommandé de chauffer modérément et d'ouvrir le compartiment du filtre de la fournaise pour faciliter la circulation de l'air par gravité naturelle, autour de la chambre à combustion de la fournaise au bois Max Caddy.

11.8.7. FEU DE CHEMINÉE

Un feu de cheminée peut survenir lorsque la flamme d'un feu incontrôlé allume la créosote et la suie accumulées dans un système d'évacuation mal entretenu. Ceci peut se produire entre autres lorsqu'on brûle du carton, des branches ou des petits morceaux de bois. Les symptômes habituels d'un feu de cheminée sont:

1. Un grondement.
2. Le tuyau devient extrêmement chaud.
3. Des étincelles ou même des flammes sortent de la cheminée
4. S'il y a un feu de cheminée, contactez immédiatement votre service local d'incendie et aspergez d'eau le toit où est localisée la cheminée.

Assurez-vous ensuite que la porte de la fournaise ainsi que le registre d'admission d'air sont bien fermés (si nécessaire, abaissez le point de consigne du thermostat à bois ou décrochez la tige de contrôle du registre) et FERMEZ manuellement le contrôle barométrique s'il y a lieu).

En cas d'emballement de la fournaise (feu incontrôlable, causé par une mauvaise utilisation ou un tirage trop élevé), suivez la même procédure que pour le feu de cheminée sauf que, il faut OUVRIR manuellement le contrôle barométrique.

11.8.8. SERVICE DES INCENDIES DE VOTRE MUNICIPALITÉ.

Téléphone : _____

Max Caddy Owner's manual French (page 40 of 79)

12. ENTRETIEN

12.1. ENTRETIEN DES ÉCHANGEURS

Les échangeurs de chaleur doivent être nettoyés à la fin de chaque saison de chauffage. Pendant l'été, l'air est plus humide et avec une circulation d'air minimal dans la fournaise, la créosote et/ou la suie restante dans les échangeurs peuvent produire un acide qui accélérera le processus de corrosion de l'acier et peut le perforer prématurément, ce qui en retour, ne serait pas couvert par cette garantie.

Le tuyau d'évacuation et les échangeurs devraient être inspectés régulièrement durant la saison de chauffage. L'accessibilité de ces derniers est rendue facile (sans l'aide d'outils) : dévissez l'écrou papillon sur la porte d'accès des échangeurs. Voir les photos ci-après.

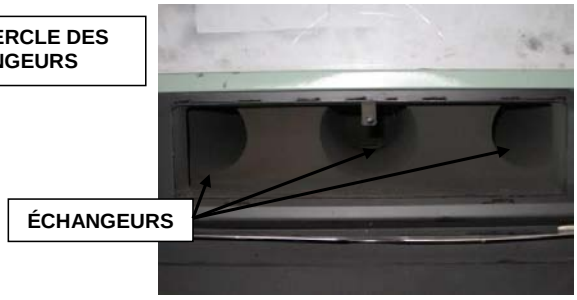

Avant de nettoyer les trois tuyaux de l'échangeur, déplacez le coupe-feu (panneaux) de vermiculite vers l'avant (voir le croquis à la page suivante). À l'aide du grattoir, nettoyez les trois tuyaux de l'échangeur. La saleté située dans les échangeurs latéraux tombera dans la chambre à combustions, tandis que la saleté accumulée dans l'échangeur central devra être évacuée par l'avant ou l'arrière de la fournaise. Ensuite, vérifiez que le coupe-feu est dégagé de cendre. ***N'oubliez pas de repositionner le coupe-feu vers l'arrière dans sa position originale.*** Enfin, refermez la porte d'accès des échangeurs.

Vue de coupe de la fournaise Max Caddy bois seulement

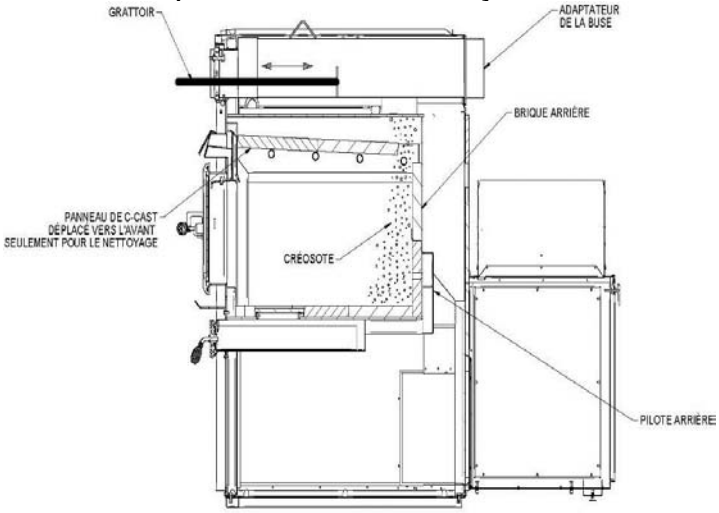

Max Caddy Owner's manual French (page 41 of 79)

12.2. ENTRETIEN DE LA CHEMINÉE

Une des méthodes les plus efficaces pour nettoyer une cheminée est d'y laisser descendre une brosse très dure (brosse de ramonage). Brossez de haut en bas. La créosote et la suie accumulées se détacheront des parois et tomberont à la base de la cheminée, où vous pourrez les ramasser.

La cheminée doit être vérifiée régulièrement et lorsqu'il y a accumulation de créosote, celle-ci doit être enlevée. Un nettoyage hebdomadaire peut être nécessaire durant les périodes douces et un nettoyage mensuel peut être suffisant pendant les mois les plus froids.

12.3. INSPECTION DU TUYAU À FUMÉE

- Le tuyau à fumée devrait être inspecté régulièrement durant la saison de chauffage.
- Autant que possible, le tuyau à fumée devrait être démonté et nettoyé.
- Le tuyau devrait être soigneusement examiné pour toute défectuosité.
- Si l'inspection minutieuse ne révèle aucune défectuosité, vous pouvez replacer le tuyau; s'il s'avère défectueux, vous devez le remplacer.
- N'utilisez que du bois de chauffage comme combustible.
- À titre de combustible, le bois franc sec en bûches de 18" à 22" de longueur est idéal.
- Examinez régulièrement les conduits de raccordement, les joints et les garnitures d'étanchéité pour s'assurer que la fumée et les gaz de combustion ne sont pas aspirés et transportés dans le réseau de distribution d'air.

12.4. ENTRETIEN DU MOTEUR DU VENTILATEUR

Un nettoyage périodique du boitier, des pales et du ventilateur à l'aide d'un aspirateur est nécessaire afin de ne pas nuire aux performances et créer une surchauffe de celui-ci.

NE PAS SURLUBRIFIER.

12.5. FILTRES

La fournaise ne doit jamais être utilisée sans filtre. Pour faire fonctionner efficacement et de façon sécuritaire un système de chauffage à combustion contrôlée, vous vous devez de l'entretenir régulièrement. Cela signifie que la cheminée, les joints et les tuyaux doivent être en bon état. Les filtres à air doivent être changés régulièrement. Utilisez un filtre de la même grandeur et du même type que l'original. Les filtres haute efficacité 2 plis, 3 plis ou 4 plis sont recommandés.

12.5.1. DIMENSION DU FILTRE

MAX CADDY : Filtre 16" x 20" x 1"

12.6. AJUSTEMENT DE LA PORTE ET ENTRETIEN DU CORDON D'ÉTANCHÉITÉ

Il est important de maintenir en bon état le cordon d'étanchéité de la porte. L'ajustement de la porte est préréglé à l'usine. Avec le temps, le cordon peut s'affaisser et un réajustement de la porte peut s'avérer nécessaire. Si l'ajustement de la porte ne suffit pas, remplacez le cordon. Utilisez un cordon d'origine.

12.6.1. AJUSTEMENT DE LA PORTE

1. Dévissez complètement la tige de blocage et son écrou de la porte (voir la photo ci-après).

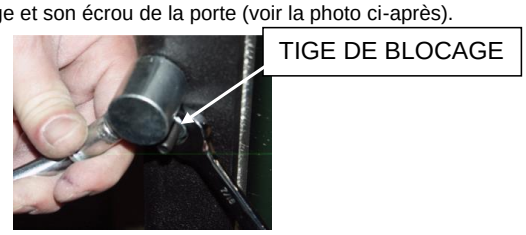

2. Pour augmenter la pression de la porte sur le cordon, tournez la poignée dans le sens inverse des aiguilles d'une montre; pour diminuer la pression de la porte sur le cordon, tournez la poignée dans le sens des aiguilles d'une montre.
3. Revissez la tige de blocage à environ 1/4" de profondeur tout en prenant soin de la bloquer à l'aide de l'écrou.

Max Caddy Owner's manual French (page 42 of 79)

13. PIÈCES DE REMPLACEMENT

Votre fournaise PSG est conçue pour fonctionner proprement et demande donc un entretien minimal. Il est conseillé de procéder à un examen visuel de l'appareil environ une fois par mois pour s'assurer qu'il n'y a aucune pièce endommagée. Les réparations nécessaires doivent être effectuées sans délai avec des pièces d'origine PSG. Voir la section 29 - VUE ÉCLATÉE ET LISTE DE PIÈCES ou vous pouvez consulter notre site Internet au http://www.caddyfurnaces.com/fr/pieces/ pour obtenir la liste complète des pièces de remplacement.

13.1. LA VITRE

- Inspectez régulièrement la vitre afin de déceler les fissures ou fêlures. Si la vitre est endommagée, cessez d'utiliser la fournaise à bois tant que la vitre n'aura pas été remplacée.
- Remplacez avec une vitre du même type, soit du verre céramique de 5 mm (3/16") d'épaisseur que vous pouvez vous procurer chez votre détaillant PSG.
- Pour changer la vitre, enlevez les vis retenant les moulures de la vitre à l'intérieur de la porte. Enlevez ces moulures et remplacez la vitre endommagée par la neuve. Refaites la procédure inverse après avoir remplacé la vitre. Il est préférable de changer le cordon d'étanchéité lors du remplacement de la vitre.
- Ne nettoyez jamais les vitres avec un produit qui pourrait l'endommager. Utilisez un produit spécialisé à cet effet disponible dans les magasins où l'on vend des poêles et foyers à bois.
- Les vitres doivent être nettoyées seulement lorsqu'elles sont froides.

13.2. LE JOINT D'ÉTANCHÉITÉ

Nous recommandons de changer le joint d'étanchéité qui assure la fermeture hermétique de la porte de votre fournaise une fois par année afin d'assurer un bon contrôle de la combustion de même qu'une efficacité et une sécurité maximale. Pour changer votre joint d'étanchéité, enlevez le joint endommagé. Nettoyez soigneusement la surface ainsi découverte. Appliquez un adhésif spécialement vendu à cet effet (silicone haute température 650°F ou +) et étendre le nouveau joint d'étanchéité. Vous pouvez rallumer votre fournaise environ 4 heures après avoir complété cette procédure.

14. DÉPANNAGE

Lorsque vous avez des problèmes avec votre fournaise, votre première réaction peut être d'appeler l'assistance technique. Cette section vous aidera à économiser temps et argent en vous permettant de résoudre des problèmes simples par vous-même.

Les problèmes les plus courants sont généralement causés par les cinq facteurs suivants :

1. Mauvaise utilisation ou un entretien inadéquat;
2. Mauvaise installation;
3. Combustible de mauvaise qualité;
4. Composante défectueuse;
5. Défaut de fabrication.

La fournaise est équipée d'une carte électronique qui permet à la fournaise de fournir un diagnostic lorsque survient un problème. Il est donc important de ne pas débrancher la fournaise lorsqu'elle est en marche. Débrancher la fournaise désactive toutes les fonctions de sécurité vous ne serez pas en mesure de voir le code d'erreur donnée par la fournaise afin de comprendre quel est le problème. Il est donc important de bien lire cette section avant de téléphoner au service à la clientèle.

Les pages suivantes contiennent des informations sur les codes d'erreur que votre appareil vous donnera lorsqu'il rencontrera une situation problématique. Des pistes de solutions sont aussi données pour vous aider à comprendre pourquoi cette situation s'est produite.

NOTE : SI VOUS DEVEZ CONTACTER VOTRE DÉTAILLANT OU LE FABRICANT, AYEZ EN MAIN LE NUMÉRO DE MODÈLE DE VOTRE APPAREIL, AINSI QUE LE NUMÉRO DE SÉRIE À PORTÉE DE LA MAIN. CECI VOUS AIDERA À OBTENIR UN SERVICE PLUS RAPIDE. LE NUMÉRO DE SÉRIE SE TROUVE SUR LA PLAQUE D'HOMOLOGATION SUR LE CÔTÉ DE L'APPAREIL.

ATTENTION : RISQUE DE DÉCHARGE ÉLECTRIQUE. SI VOUS DEVEZ TESTER MANUELLEMENT, MANIPULER OU REMPLACER UNE COMPOSANTE, LA FOURNAISE DOIT ÊTRE DÉBRANCHÉE DE SA SOURCE D'ALIMENTATION EN COURANT.

Max Caddy Owner's manual French (page 43 of 79)

14.1. VÉRIFICATION DE L'ÉTAT DE FONCTIONNEMENT D'UNE COMPOSANTE

À tout instant durant le fonctionnement de votre unité, il vous est possible de valider l'état de fonctionnement de chacune des composantes suivantes :

- Ventilateur de distribution
- Volet de combustion
- Capteur de température (RTD)
- Serpentin d'eau chaude
- Humidificateur
- Thermopompe

14.1.1. VENTILATEUR DE DISTRIBUTION

Pour vérifier l'état de fonctionnement du ventilateur de distribution, allez dans le menu « DÉPANNAGE LIAISON » puis rendez vous à la page 5. Lorsque le ventilateur est en fonction, la vitesse sélectionnée est en noir.

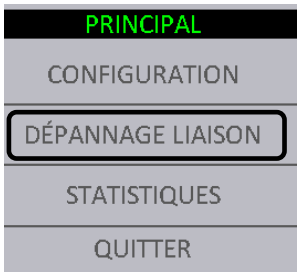

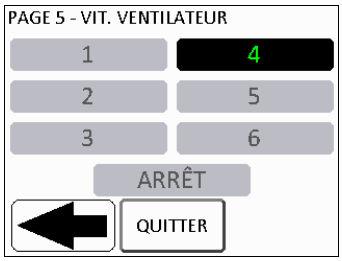

14.1.2. VOLET DE COMBUSTION, SERPENTIN D'EAU CHAUDE ET HUMIDIFICATEUR

Pour vérifier l'état de fonctionnement du volet de combustion, du serpentin d'eau chaude et de l'humidificateur allez dans le menu « DÉPANNAGE LIAISON » puis rendez vous à la page 3. Lorsque le chauffage au bois fonctionne, le volet est ouvert donc le carré vert devrait se retrouver du côté gauche, celui du circuit fermé. Lorsqu'un autre mode de chauffage fonctionne, le volet est fermé, donc le circuit est ouvert. La même logique peut être appliquée pour le fonctionnement du serpentin et de l'humidificateur.

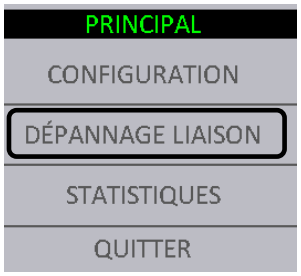

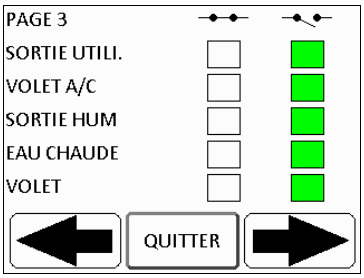

14.1.3. CAPTEUR DE TEMPÉRATURE (RTD)

Le capteur de température lit la température en continu dans le plénum et l'affiche sur la page principale dans le coin droit supérieur. Si le capteur est défectueux, le message d'erreur « SURCHAUFFE PLÉNUM » apparaîtra. Voir la section 14.2 - PRINCIPAUX CODES D'ERREURS, CAUSES ET SOLUTIONS POSSIBLES pour plus d'informations.

Max Caddy Owner's manual French (page 44 of 79)

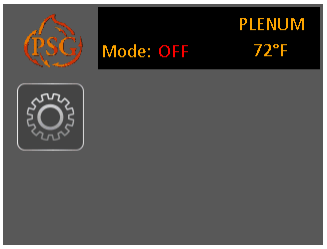

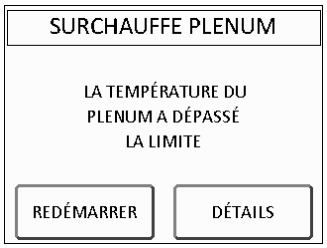

14.2. PRINCIPAUX CODES D'ERREURS, CAUSES ET SOLUTIONS POSSIBLES

Cette section contient les principaux codes d'erreur, les causes possibles et plusieurs pistes de solutions pour vous aider à les résoudre. Pour retourner à la page précédente, appuyer sur le bouton, REDÉMARRER .

NOTE : SI, APRÈS AVOIR ESSAYÉ TOUTES LES SOLUTIONS POSSIBLES MENTIONNÉES DANS LA SECTION SUIVANTE, VOUS EXPÉRIMENTEZ TOUJOURS DES PROBLÈMES AVEC VOTRE FOURNAISE, CONTACTEZ VOTRE DÉTAILLANT LOCAL OU LE SERVICE APRÈS-VENTE DU FABRICANT.

NOTE : SI VOUS DEVEZ CONTACTER VOTRE DÉTAILLANT OU LE FABRICANT, AYEZ EN MAIN LE NUMÉRO DE MODÈLE DE VOTRE FOURNAISE, AINSI QUE LE NUMÉRO DE SÉRIE À PORTÉE DE LA MAIN. CECI VOUS AIDERA À OBTENIR UN SERVICE PLUS RAPIDE. (LE NUMÉRO DE SÉRIE EST SITUÉ SUR LA PLAQUE D'HOMOLOGATION SUR LE CÔTÉ DE LA FOURNAISE.)

14.2.1. LA FOURNAISE SURCHAUFFE

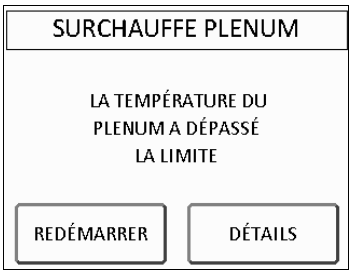

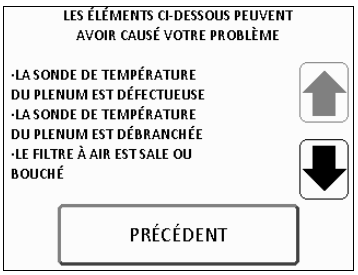

Le capteur de température (RTD) est débranché ou défectueux : Si la température du plénum affichée sur l'écran tactile est de 0 ̊F ou de 1140 ̊F, le capteur de température est soit débranché ou défectueux. Vérifiez le branchement du capteur (Voir la Section 9.4 - INSTALLATION DU CAPTEUR DE TEMPÉRATURE (RTD) DU PLÉNUM D'AIR CHAUD) ou remplacez-le au besoin.

Max Caddy Owner's manual French (page 45 of 79)

Le filtre à air est sale ou bouché : Nettoyez régulièrement le filtre de la fournaise. Si le filtre est endommagé, remplacez-le.

Le ventilateur de distribution est défectueux : Vérifiez l'état du ventilateur. Pour ce faire, Voir la Section 14.1.1 - VENTILATEUR DE DISTRIBUTION. Remplacez-le au besoin.

Le fusible du ventilateur de distribution est brûlé : Changez la fusible 12A de la carte puissance.

La pression dans le plénum est trop élevée : Assurez-vous que votre système de distribution d'air est bien balancé et que le filtre n'est pas sale ou obstrué. Assurez-vous que les retours/sorties d'air secondaires ne sont pas obstruées.

14.2.2. AUCUN CHAUFFAGE

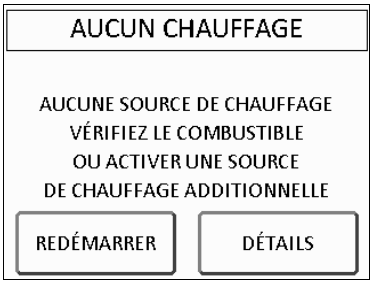

Ce message apparaît :

- Lorsque la fournaise au bois n'a pas réussi à faire augmenter la température dans le plénum suffisamment pour atteindre le KIP ou
- Lorsque la température n'a pas atteint 100℉ dans le plénum en moins de cinq minutes pour le chauffage auxiliaire.

Assurez-vous qu'il y a un feu dans la fournaise et que les sources de chauffage auxiliaire sont fonctionnelles et bien branchées.

14.2.3. ERREUR DE COMMUNICATION

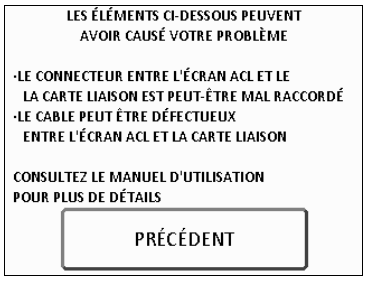

Erreur de communication. Les informations provenant de l'écran tactile ne sont pas lues par la carte liaison. Il est possible que le fil de télécommunication ne soit pas bien branché. Assurez-vous que chaque extrémité du fil fasse bien contact dans le connecteur. Il est aussi possible que le fil soit endommagé. Dans cette éventualité, remplacez-le.

Max Caddy Owner's manual French (page 46 of 79)

14.2.4. ODEUR DE FUMÉE

- **Les fuites dans le système d'évent**. Inspectez toutes les connexions du système d'évent et assurez-vous que tous les joints sont scellés et attachés conformément aux instructions du fabricant du système d'évent. Ceci assurera une performance constante et évitera que la fumée fuie dans la pièce.

- **Joints d'étanchéités usés**. Un joint est peut-être endommagé (Portes, couvercle d'accès pour nettoyage, etc.). Assurez-vous que tous les joints sont en bon état et les remplacer par des pièces d'origine si nécessaire. Assurez-vous que toutes les portes sont bien ajustées.

- **La pression négative**. Une faible odeur de bois lors de l'allumage ou l'arrêt est normale. Toutefois, si cette odeur est de plus en plus forte ou si vous remarquez une accumulation de suie inhabituelle sur les murs ou meubles, vérifiez votre système d'évent avec soin pour détecter les fuites et assurez-vous que tous les joints sont étanches. De plus, assurez-vous que le calendrier d'entretien recommandé a été suivi.

14.2.5. L'ÉCRAN TACTILE NE S'ALLUME PAS

- **Il n'y a pas de courant alimentant la fournaise**. Vérifiez si la fournaise est branchée et s'il y a du courant. Vérifiez si le fusible est bon. Remplacez-le si nécessaire.

- **Le fil TELCO est défectueux ou n'est pas correctement connecté**.

- **La température de l'écran est sous zéro.** Lorsque l'écran est soumis à une température trop froide, les cristaux liquides ne peuvent fonctionner adéquatement ce qui provoque une perte de communication. Cette situation peut survenir dans le cas ou l'appareil est resté à l'extérieur ou s'il est soumis à une température de la pièce trop basse comme dans un chalet non chauffé ou un garage très froid.

14.2.6. SYSTÈME AUXILIAIRE

Ce message apparaît quand une demande de chaleur provenant du thermostat de la fournaise existante est envoyé et que la Max Caddy s'éteint.

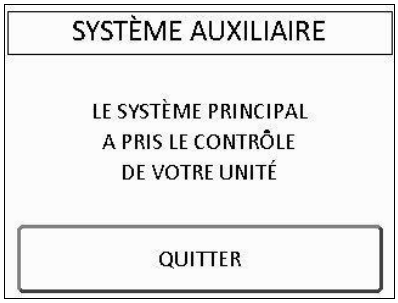

Max Caddy Owner's manual French (page 47 of 79)

15. SCHÉMA ÉLECTRIQUE GÉNÉRAL

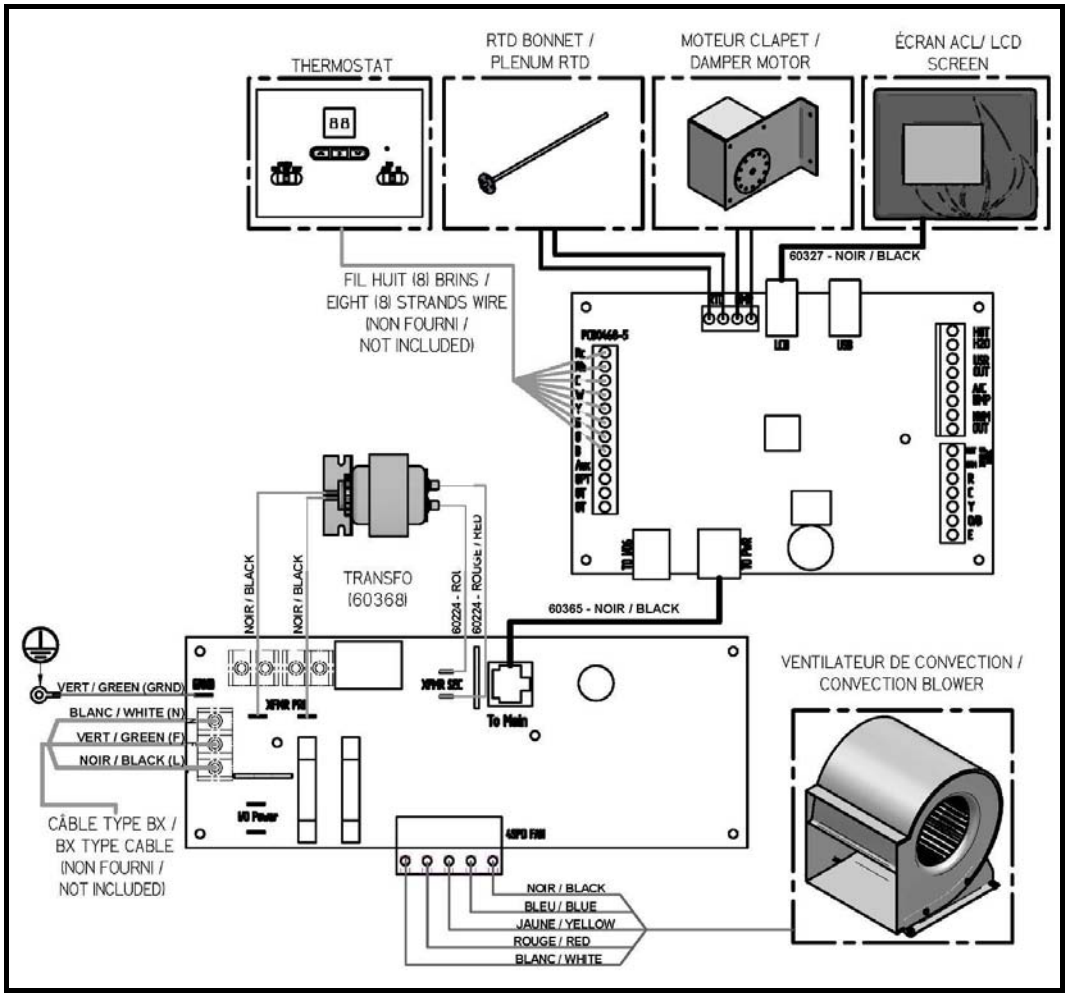

Max Caddy Owner's manual French (page 48 of 79)

16. SCHÉMA ÉLECTRIQUE POUR FOURNAISE EN PARALLÈLE

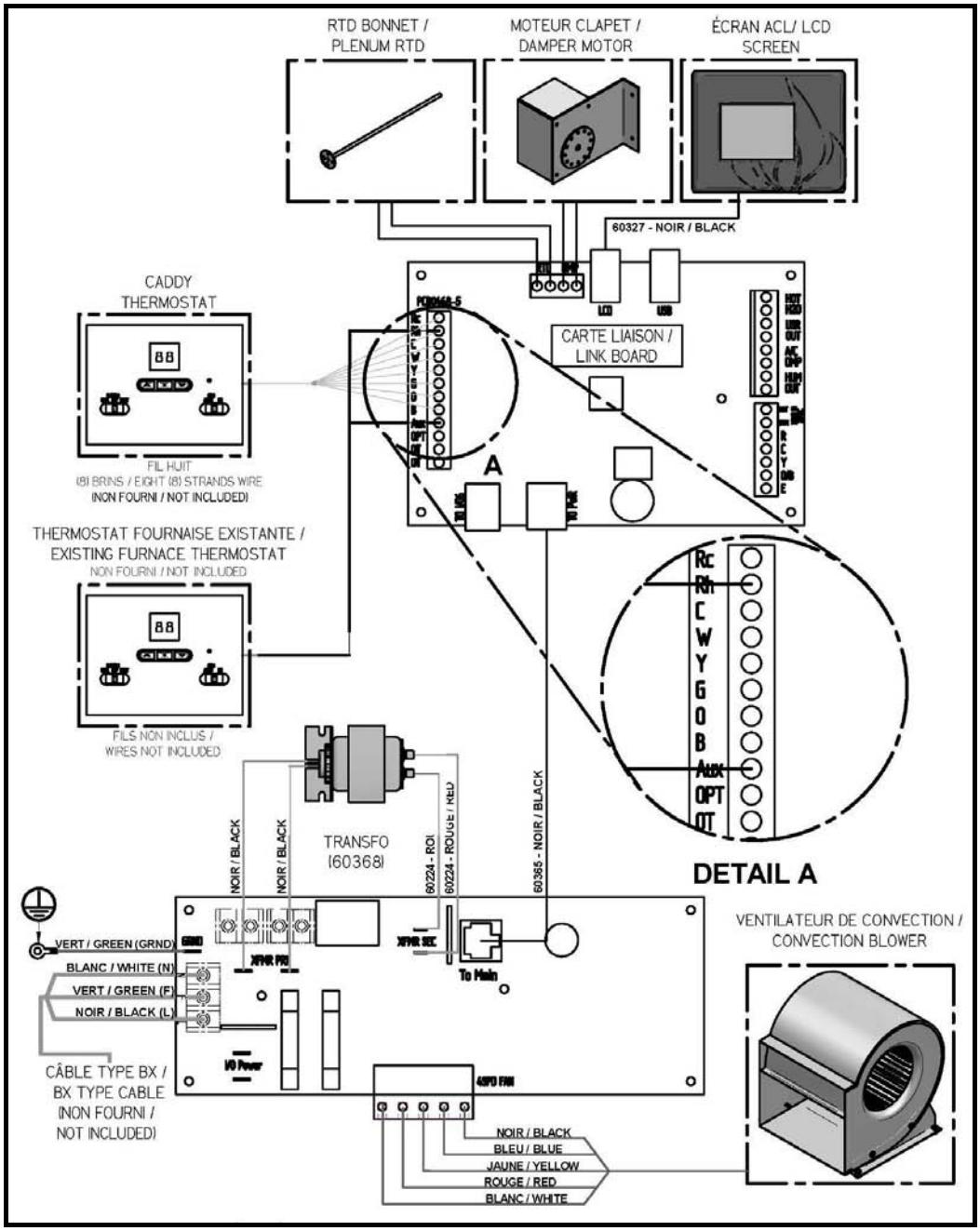

48

Max Caddy Owner's manual French (page 49 of 79)

17. SCHÉMA ÉLECTRIQUE POUR UNITÉ ÉLECTRIQUE

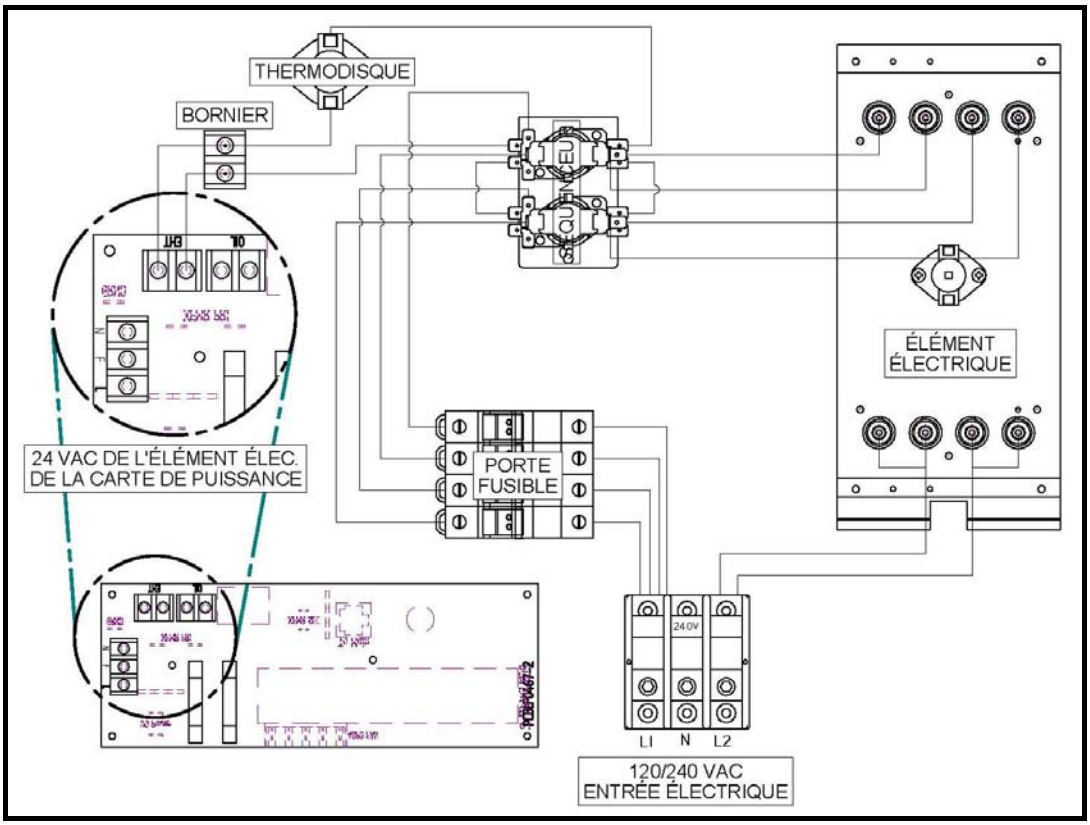

Max Caddy Owner's manual French (page 50 of 79)

INSTRUCTIONS POUR L'INSTALLATION ET L'OPÉRATION DE

FOURNAISE COMBINÉE BOIS/HUILE

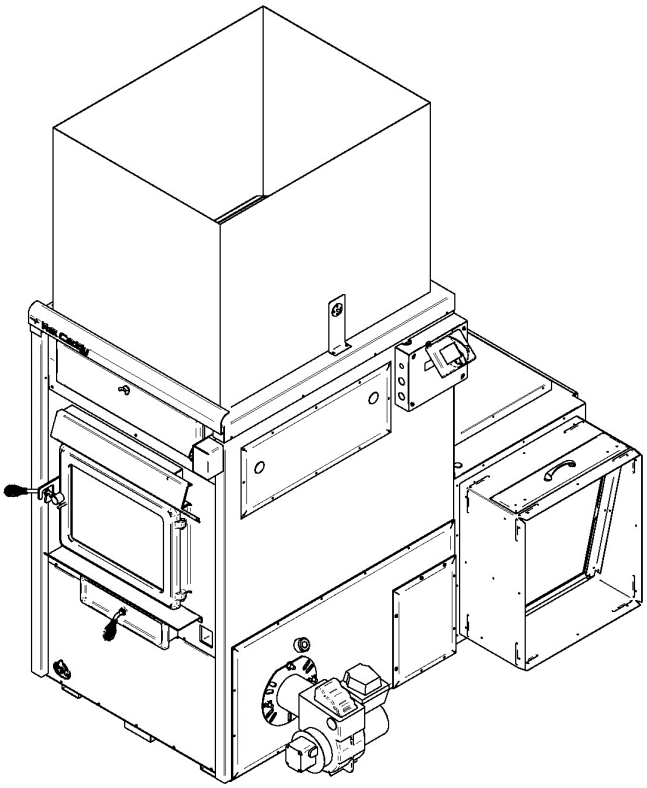

COMPOSANTS NECESSAIRES POUR FOURNAISE MAX CADDY COMBINÉE BOIS/HUILE

Pour utiliser la configuration fournaise Max Caddy combinée bois/huile vous devez assembler l'ensemble de ventilateur (PA08566), vendu séparément. Les instructions de montage sont dans le feuillet d'installation fourni avec l'ensemble de ventilateur.

Vous devez également assembler l'unité à l'huile. Les instructions de montage sont dans le feuillet d'installation fourni avec l'unité à l'huile (PA08512 ou PA08513) vendu séparément.

Max Caddy Owner's manual French (page 51 of 79)

INFORMATION GENERALE POUR LA FOURNAISE À L'HUILE

PRENEZ SOIN DE LIRE TOUT LE MANUEL AVANT D'OPÉRER LA FOURNAISE

ATTENTION	ATTENTION
DANGER D'EXPLOSION OU D'INCENDIE. POUR VOTRE SÉCURITÉ NE PAS RANGER OU UTILISER DE L'ESSENCE OU TOUT AUTRE PRODUIT INFLAMMABLE LIQUIDE OU GAZEUX PRÈS DE CETTE UNITÉ DE CHAUFFAGE.	NE PAS TENTER D'ALLUMER LE BRÛLEUR LORSQU'UN EXCÈS D'HUILE S'EST ACCUMULÉ, LORSQUE L'APPAREIL EST REMPLI DE VAPEUR OU LORSQUE LA CHAMBRE À COMBUSTION EST TRÈS CHAUDE.

NE JAMAIS BRÛLER DE DÉCHETS OU DE PAPIER DANS L'APPAREIL ET NE JAMAIS LAISSER DE PAPIER OU AUTRE PRODUIT INFLAMMABLE AUTOUR DE L'APPAREIL.

AVERTISSEMENT : INSTALLER LE GICLEUR. AJUSTER LES ÉLECTRODES. AJUSTER LA PRESSION.

NOTE: SI UN PROBLÈME RÉSULTE D'UNE MAUVAISE INSTALLATION, AUCUNE GARANTIE SUR LE PRODUIT NE SERA VALIDE.

NE PAS TENTER DE MODIFIER L'APPAREIL OU SES COMMANDES – APPELER LE TECHNICIEN.

VEUILLEZ CONSERVER CE DOCUMENT!

Max Caddy Owner's manual French (page 52 of 79)

18. GÉNÉRALITÉS

Ce manuel d'instruction et d'utilisation traite principalement de l'unité à huile de votre fournaise combinée BOIS/HUILE.

Pour obtenir le meilleur fonctionnement possible de votre fournaise combinée BOIS/HUILE, voici quelques conseils à mettre en pratique concernant l'installation et le fonctionnement de votre fournaise.

- Respectez les codes locaux (en cas de doute, contactez votre marchand d'appareils de chauffage local);
- Vérifiez les spécifications dans le manuel d'instructions concernant les espaces de dégagement; assurez-vous qu'elles correspondent à celles inscrites sur la plaque d'homologation;
- Assurez-vous que votre fournaise est installée conformément aux instructions données sur la plaque d'homologation;
- L'ajustement des contrôles doit être effectué par un technicien compétent. Les réglages des contrôles et de la vitesse du ventilateur doivent être conformes aux recommandations de la CMMTQ tout en respectant les plages de pression statique recommandées dans le plénum d'air chaud de la fournaise.

AVERTISSEMENT

L'INSTALLATION DES FOURNAISES COMBINÉES À L'HUILE DOIT ÊTRE CONFORME AUX RÈGLEMENTS DES AUTORITÉS COMPÉTENTES ET À LA NORME CAN/CSA B-139 M-91 CONCERNANT L'INSTALLATION DES APPAREILS DE CHAUFFAGE À L'HUILE.

AVERTISSEMENT

LES FOURNAISES À L'HUILE NE SONT PAS APPROUVÉES POUR DU COMBUSTIBLE PLUS LOURD QUE L'HUILE NO.2 (TYPE POUR FOURNAISES). N'UTILISEZ PAS D'ESSENCE, D'HUILE À TRANSMISSION OU D'AUTRE HUILE CONTENANT DE L'ESSENCE.

AVERTISSEMENT

POUR L'INSTALLATION EN MODE BOIS/HUILE VOUS DEVEZ RACCORDER LA FOURNAISE MAX CADDY À UNE CHEMINÉE DE 7" DE DIAMÈTRE. UN RÉDUCTEUR DE 7" À 6" EST ALORS REQUIS ET DOIT ÊTRE INSTALLÉ À LA SORTIE DE LA FOURNAISE.

19. TIRAGE ET CHEMINÉE

La cheminée doit être conforme aux règlements des autorités compétentes et à la norme CAN/CSA B139 & NFPA 31 concernant l'installation des appareils de chauffage à l'huile. L'installation de la tuyauterie de raccordement de l'unité à l'huile doit être faite et approuvée par un installateur de métier qualifié.

NOTE : Le volet barométrique fourni avec l'appareil doit être installé correctement sur le tuyau à fumée de l'unité à l'huile. Le but du volet est d'ajuster le tirage dans le tuyau d'évacuation de l'unité à l'huile au niveau recommandé. Étant donné que le tuyau d'évacuation de l'unité à l'huile est connecté sur le tuyau d'évacuation de la fournaise au bois, le tirage minimum à respecter est de 0,04" C.E. dans le tuyau d'évacuation du côté bois, et ce, en tout temps. En fait, un volet barométrique mal ajusté peut causer une perte de tire importante dans le tuyau d'évacuation de la fournaise au bois et en affecter le bon fonctionnement.

20. RÉSERVOIR À L'HUILE ET TUYAUTERIE

La capacité maximale du réservoir utilisé doit être de 200 gallons (900 litres) et celui-ci doit être situé à au moins 60" du brûleur (une distance de 24 pouces est cependant recommandée pour l'entretien). Les codes locaux régiront la grosseur des prises d'air et des orifices de remplissage ainsi que les types de bouchons à utiliser. 1 1/4" IPS et 2" IPS sont les dimensions généralement acceptées pour les tuyaux de prise d'air et de remplissage, respectivement. Le tuyau transportant l'huile au brûleur devra être de cuivre et avoir un diamètre extérieur de 3/8" pour les longueurs de moins de 50 pieds, et 1/2" pour les longueurs excédant 50 pieds. Une valve d'arrêt manuelle et un filtre à l'huile doivent être installés dans cet ordre sur la conduite d'amenée d'huile entre le réservoir et le brûleur. Le tuyau pour l'huile ne doit pas être enfoui et doit être protégé adéquatement pour prévenir les dommages.

21. POMPE DU BRÛLEUR

Lorsque le réservoir est situé plus bas que l'appareil, la pompe à simple stage de série alimentée par un conduit unique, peut compenser une dénivellation de 8 pieds (244 cm) mesurée entre la sortie du réservoir et la hauteur d'entrée dans le brûleur.

Max Caddy Owner's manual French (page 53 of 79)

Lorsque la dénivellation excède 8 pieds (244 cm), mais sans dépasser 10 pieds (305 cm), il faut installer le capuchon de dérivation (by-pass plug) fourni et un conduit de retour d'huile au réservoir. **Pour de plus amples détails, voir « INSTALLATION INFORMATIONS », Part No. 21844 sur la pompe du brûleur.**

Dans le cas où l'élévation est de plus de 10 pieds (305 cm), une pompe à deux stages peut être requise en plus du conduit de retour.

22. INSTALLATION DE L'APPAREIL

Il est obligatoire d'installer un commutateur d'évent bloqué avec un appareil au mazout qui fonctionne normalement avec son système de ventilation sous dépression. Ce dispositif est prévu pour détecter un système de ventilation bloqué, pour répondre aux gaz de cheminée chauds se formant dans son tube de transfert thermique et pouvant être câblé pour éteindre le brûleur à mazout. Il doit être réinitialisé manuellement.

22.1. EMPLACEMENT DE L'UNITÉ

Voir la Section 9.6 - EMPLACEMENT DE L'UNITÉ pour plus de détails concernant l'emplacement de l'unité.

22.2. INSTALLATION EN PARALLÈLE

Voir la Section 9.13 - INSTALLATION EN PARALLÈLE

22.3. DÉGAGEMENTS AUX MATÉRIAUX COMBUSTIBLES

N.B. Ces appareils doivent être installés conformément aux instructions indiquées sur la plaque d'homologation apposée sur l'appareil.

L'INSTALLATION DE L'ÉCRAN PARE-CHALEUR FOURNI AVEC L'APPAREIL EST OBLIGATOIRE.

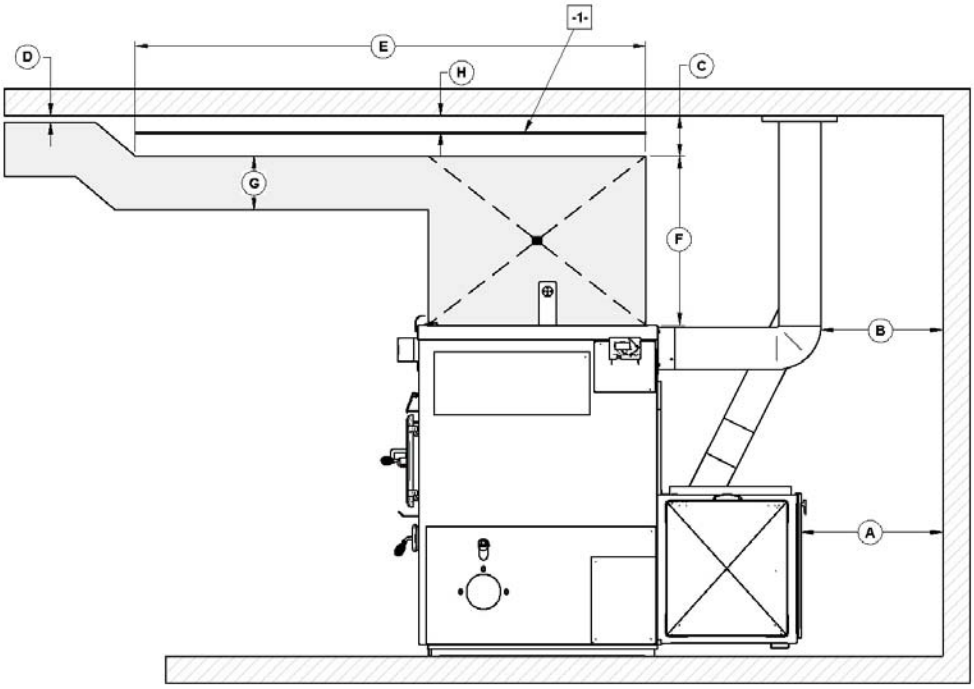

Max Caddy Owner's manual French (page 54 of 79)

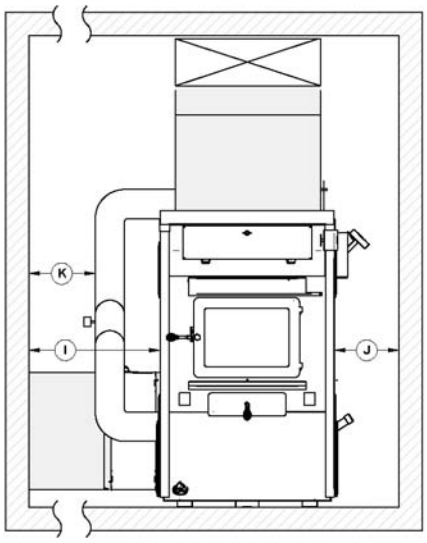

DÉGAGEMENTS MINIMAUX			
A	24" (610 mm)	**G**	8" (203 mm)
B	18" (457 mm)	**H**	1.5" (mm)
C	6" (152 mm)	**I**	24" (610mm)
D	1" (25 mm)	**J**	24" (610mm)
E	72" (1829 mm)	**K**	9" (229mm)
F	24" (610 mm)		
-1-	**HEAT SHIELD**		

22.4. PROTECTION DE PLANCHER

Voir la Section 9.7.4 - PROTECTION DE PLANCHER

22.5. PLÉNUM D'AIR CHAUD

Voir la Section 9.12 - PLÉNUM D'AIR CHAUD

22.6. RACCORD DU TUYAU ET REGISTRE DE TIRAGE

Le tuyau raccordant la fournaise à la cheminée doit être le plus court et le plus droit possible. L'utilisation de coudes à 45° est fortement recommandée pour une meilleure évacuation de la fumée dans la cheminée tant du côté de la fournaise au bois que de l'unité à l'huile. Le volet barométrique (ou registre de tirage) fourni avec l'appareil doit être installé de niveau sur une longueur droite du tuyau d'évacuation de l'unité à l'huile, à environ 24" de la sortie de ce dernier.

TYPE DE FOURNAISE	DIAMÈTRE DU TUYAU À FUMÉE DE L'UNITÉ À L'HUILE
MAX CADDY	5"

Max Caddy Owner's manual French (page 55 of 79)

22.7. DIFFÉRENTES INSTALLATIONS

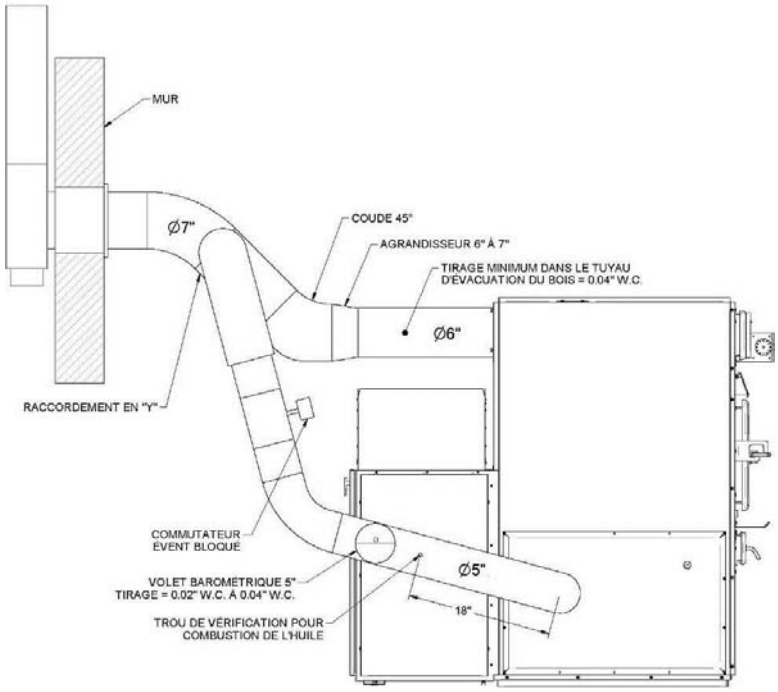

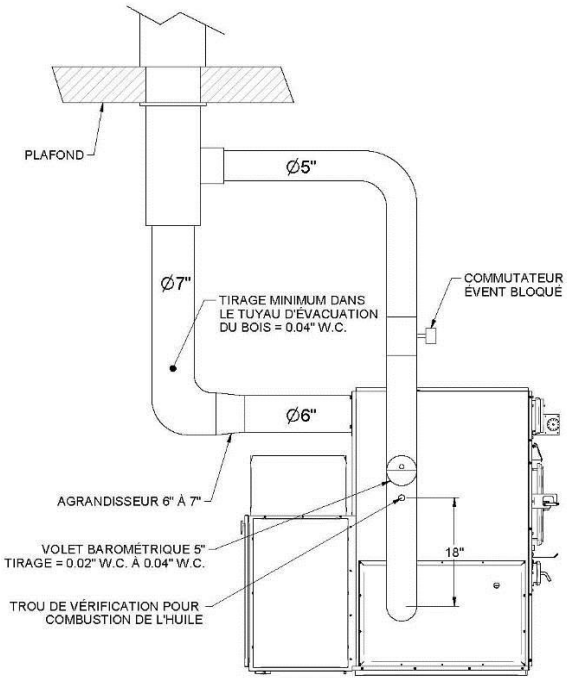

Max Caddy Owner's manual French (page 56 of 79)

22.8. AIR DE COMBUSTION

Voir la Section 9.11 - AIR DE COMBUSTION (INSTALLATION D'UNE ENTRÉE D'AIR FRAIS)

22.9. RACCORDEMENT ÉLECTRIQUE

Voir la Section 9.9 - RACCORDEMENT ÉLECTRIQUE

22.10. THERMOSTAT

Voir la Section 10 - INSTALLATION DU THERMOSTAT

23. INSTRUCTIONS D'OPÉRATION

23.1. CONTRÔLE DU VENTILATEUR

Voir la Section 11.5 - CONFIGURATION DES VITESSES DU VENTILATEUR DE DISTRIBUTION

23.2. CONTRÔLE DE SÉCURITÉ DE LA COMBUSTION

Le brûleur à l'huile de type AFG est équipé d'un contrôle électronique incluant une fonction pré-purge et un nouveau moteur d'entraînement plus durable.

23.3. PRÉ-PURGE

Lors d'une demande de chauffage, le ventilateur du brûleur fonctionnera pendant 15 secondes afin d'évacuer les vapeurs d'huile potentielles et initialiser le tirage avant de procéder à l'allumage qui se fera alors en douceur.

23.4. SÉCURITÉ DE FONCTIONNEMENT

Si la flamme s'éteint lorsque le brûleur est en marche, le contrôle passe en mode de recyclage « RECYCLE » et coupe l'alimentation au brûleur pendant un délai de 60 secondes. Après ce délai, le contrôle passe à nouveau au mode d'allumage « LIGHTING ». Si la flamme s'éteint 3 fois de suite, le contrôle passera au mode d'arrêt complet « LOCKOUT » pour prévenir un cycle continu avec des répétitions d'extinction des flammes, ce qui causerait un encrassement prématuré de l'appareil et de la tuyauterie. Pour désactiver ce mode, il faut presser et tenir le bouton rouge du contrôle pendant 30 secondes consécutives.

Une lumière témoin (verte) peut indiquer quatre états :

- « On » = présence de flammes
- « Off » = pas de flammes
- 2 secondes « on », 2 secondes « Off » = en mode de recyclage « Recycle »
- 1/2 secondes « On », 1/2 secondes « Off » = en mode d'arrêt « Lockout »

23.5. DÉSENGAGEMENT TEMPORAIRE DU BRÛLEUR

En pressant et tenant le bouton rouge (« reset »), le brûleur arrêtera jusqu'à ce que le bouton soit relâché. Alors, le contrôle recommencera au début du cycle de chauffage normal.

POUR DE PLUS AMPLES INFORMATIONS SUR LES SÉQUENCES D'OPÉRATION DU BRÛLEUR, VOIR LE MANUEL DU BRÛLEUR.

Max Caddy Owner's manual French (page 57 of 79)

23.6. AJUSTEMENT ET VÉRIFICATION DE LA COMBUSTION

Pour apprécier le rendement de nos unités à l'huile, vous devez respecter les différents critères de performance suivants :

Les appareils alimentés au mazout doivent être raccordés à des conduits d'évacuation ayant en tout temps un tirage suffisant pour assurer un fonctionnement correct et sûr de l'appareil.

Avant de mettre en marche votre unité à l'huile, assurez-vous que le bouchon scellé (SE53352) est installé et sécurisé sur le tube de vision avec la vis fournie. La chambre est calibrée de façon à ce qu'il y ait une légère pression positive, ce qui permet d'optimiser l'efficacité de la combustion. La présence du bouchon scellé empêche donc le retour d'odeur d'huile.

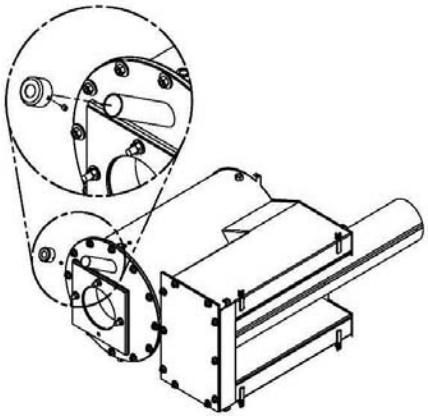

À VÉRIFIER :

- CHOIX DU GICLEUR ET DE LA TÊTE DE RÉTENTION;
- POSITION DU GICLEUR PAR RAPPORT À LA TÊTE DE RÉTENTION;PRESSION DE LA POMPE;
- PRESSION DE LA POMPE;
- ABSENCE DE BULLES D'AIR DANS LE TUYAU D'ENTRÉE D'HUILE;
- VITESSE DU VENTILATEUR;
- POSITION DU VOLET BAROMÉTRIQUE.

INSTRUMENTS REQUIS :

- TESTEUR DE TIRE;
- TESTEUR DE FUMÉE (SMOKE TEST);
- MANOMÈTRE DE POMPE;
- VÉRIFICATEUR DE POSITION DU GICLEUR ET DES ÉLECTRODES;
- TESTEUR DE COMBUSTION.

23.6.1. PROCÉDURE DE VÉRIFICATION DE LA COMBUSTION :

A. PERCER UN TROU DE 9/32" DE DIAMÈTRE DANS LE TUYAU D'ÉVACUATION À UNE DISTANCE D'ENVIRON 18" DE LA SORTIE.
B. FERMER LA PORTE ET LA TRAPPE D'ENTRÉE D'AIR PRIMAIRE DE LA FOURNAISE AU BOIS.
C. ALLUMER LE BRÛLEUR PENDANT AU MOINS 10 À 15 MINUTES CONSÉCUTIVES.
D. TIRE AU-DESSUS DU FEU = -0.01 À -0.02 (LE TIRAGE AU-DESSUS DU FEU DOIT ÊTRE MESURÉ PAR LE BOUCHON SCELLÉ SUR LE TUBE DE VISION.)
E. DENSITÉE DE FUMÉE (SMOKE TEST) ENTRE 0 ET 1 (TRACES) SUR L'ÉCHELLE DE SHELL BACHARACH.
F. TIRAGE DANS LA CHEMINÉE = - 0.02.
G. POURCENTAGE D'EXCÈS D'AIR = 20 À 40 %, 12 % CO_2, 5 % O_2.
H. EFFICACITÉ MOYENNE DE 83 % À 87% TOUT DÉPENDANT DU BRÛLEUR ET DE LA PUISSANCE D'ENTRÉE (VOIR SECTION 24.1 - UH – MAX CADDY).
I. AJUSTEMENT D'AIR DU BRÛLEUR : 0-7. RESSERRER TOUTES LES VIS DE BLOCAGE APRÈS AVOIR COMPLÉTÉ L'AJUSTEMENT FINAL.

N.B. Le volet barométrique fourni avec l'appareil doit être installé correctement sur le tuyau à fumée de l'unité à l'huile. Le but du volet est d'ajuster le tirage dans le tuyau d'évacuation de l'unité à l'huile au niveau recommandé. Étant donné que le tuyau d'évacuation de l'unité à l'huile est connecté sur le tuyau d'évacuation de la fournaise à bois, le tirage minimum à respecter est de 0,04 PO. C.E. dans le tuyau d'évacuation du côté bois, et ce, en tout temps. ***En fait, un volet barométrique mal ajusté peut causer une perte de tire importante dans le tuyau d'évacuation de la fournaise à bois et en affecter le bon fonctionnement.***

Max Caddy Owner's manual French (page 58 of 79)

23.6.2. RÉGLAGE DES ÉLECTRODES

Les électrodes doivent être ajustées par un technicien qualifié. La position appropriée des électrodes est importante pour l'allumage et la dispersion efficace du jet de l'huile.

AJUSTEMENT DE L'ÉLECTRODE POUR LA TÊTE « F »

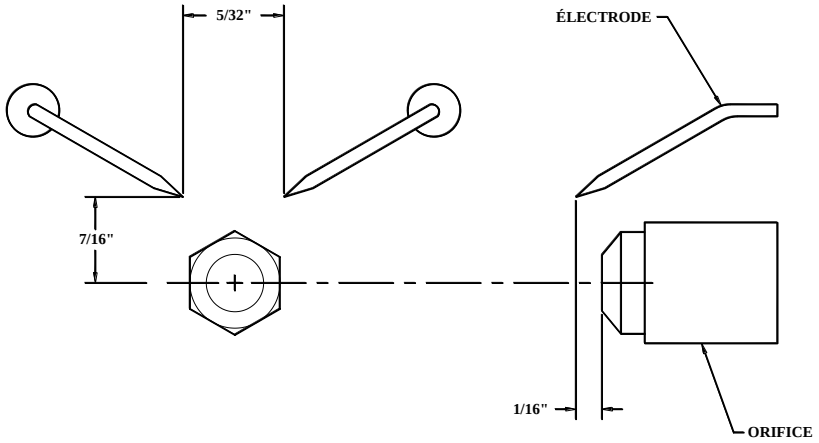

ATTENTION :

1. **RÉFÉREZ-VOUS À LA PLAQUE SIGNALÉTIQUE POUR LA PRESSION DE LA POMPE ET LE TYPE DE GICLEUR.**
2. **RÉFÉREZ-VOUS AU MANUEL D'INSTRUCTIONS DU FABRICANT DU BRÛLEUR POUR LES DÉTAILS CONCERNANT LA POMPE DU BRÛLEUR.**
3. **POUR L'AJUSTEMENT DES ÉLECTRODES, VOIR LE MANUEL DU FABRICANT DU BRÛLEUR.**
4. **POUR LA MISE EN MARCHE ET L'AJUSTEMENT DU BRÛLEUR, RÉFÉREZ-VOUS AU MANUEL DU FABRICANT DU BRÛLEUR.**
5. **LE BRÛLEUR FOURNIRA DES ANNÉES DE BON FONCTIONNEMENT S'IL EST INSTALLÉ ET ENTRETENU PAR UN TECHNICIEN QUALIFIÉ. SI À TOUT MOMENT LE BRÛLEUR NE SEMBLE PAS FONCTIONNER CORRECTEMENT, CONTACTEZ IMMÉDIATEMENT VOTRE INSTALLATEUR QUALIFIÉ POUR UNE VÉRIFICATION.**
6. **POUR PLUS DE DÉTAILS CONCERNANT LE BRÛLEUR, VOUS POUVEZ EN TOUT TEMPS CONSULTER LE MANUEL DU FABRICANT DU BRÛLEUR.**

Max Caddy Owner's manual French (page 59 of 79)

23.7. MISE EN MARCHE DE L'APPAREIL

La mise en marche doit être effectuée par un technicien qualifié. S'assurer que l'installation est terminée et que le réservoir d'huile a été rempli. La purge de la pompe doit aussi avoir été faite.

ATTENTION : METTRE LE PANNEAU DU VENTILATEUR EN PLACE AVANT DE PARTIR LE BRÛLEUR.

23.8. ARRÊT PROLONGÉ

A) Coupez l'alimentation électrique;
B) Fermez la vanne d'arrêt de l'huile.

NOTE: LA VANNE D'ARRÊT DOIT ÊTRE FERMÉE LORSQUE L'APPAREIL NE FONCTIONNE PAS POUR UNE PÉRIODE DE TEMPS PROLONGÉE.

24. DONNÉES TECHNIQUES

24.1. UH – MAX CADDY

MODÈLE	TYPE DE BRÛLEUR	BTU À L'ENTRÉE	GICLEUR	DÉBIT	TÊTE DE RÉTENTION	PLAQUE STATIQUE	PRESSION À LA POMPE	H.P. MOTEUR VENTILATEUR	AJUSTEMENT TUBULATEUR	AJUSTEMENT D'AIR	EFFICACITÉ
UH–MAX CADDY	BECKETT AFG	91,000	0.65, 70^{0}W (DELAVAN)	0.65 GAL US/H (2.46 L-H)	F0	---	100 PSI (690 kPa)	1/2	---	0/7	85%
UH–MAX CADDY	BECKETT AFG	120,000	0.65, 70^{0}W (DELAVAN)	0.86 GAL US/H (3.26 L-H)	F0	---	175 PSI (1205 kPa)	1/2	---	1/6	83%
UH–MAX CADDY	RIELLO 40 F3	91,000	0.50, 70^{0}W (DELAVAN)	0.60 GAL US/H (2.27 L-H)	---	---	150 PSI (1035 kPa)	1/2	1	2.5	87%
UH–MAX CADDY	RIELLO 40 F3	120,000	0.65, 70^{0}W (DELAVAN)	0.84 GAL US/H (3.18 L-H)	---	---	165 PSI (1135 kPa)	1/2	1	2.5	85%

Pour toutes informations complémentaires, consultez la plaque signalétique sur le côté gauche de l'appareil.

25. ENTRETIEN

Au début de la saison de chauffage, faites vérifier le système de chauffage au complet par un homme de service compétent, surtout le système d'allumage et les contrôles.

NOTE: LES TRAVAUX D'ENTRETIEN ET DE RÉPARATION SUR L'UNITÉ ET LE NETTOYAGE DU FILTRE À L'HUILE DOIVENT ÊTRE EFFECTUÉS PAR UN TECHNICIEN COMPÉTENT.

25.1. NETTOYAGE ET ENTRETIEN

ATTENTION
AVANT DE COMMENCER LE NETTOYAGE, COUPER L'ALIMENTATION ÉLECTRIQUE.

1. La fournaise, le brûleur et le tuyau à fumée devraient être nettoyés au besoin et au moins une fois par année.
2. Le gicleur devrait être inspecté et remplacé si nécessaire.
3. Manipulez le gicleur avec soin pour ne pas endommager sa surface.
4. Les électrodes devraient être ajustées tel qu'indiqué dans le manuel du brûleur.
5. Lubrifiez les coussinets du moteur du brûleur deux fois par année. (2 ou 3 gouttes de lubrifiant SAE20).
6. Le filtre à l'huile doit être vérifié au moins une fois par année et remplacé au besoin.

Max Caddy Owner's manual French (page 60 of 79)

25.2. SERVICE TECHNIQUE

Avant d'appeler un technicien, vérifiez d'abord :

- S'il y a de l'huile dans le réservoir;
- Les fusibles;
- Le réglage du thermostat;
- Le réglage de la carte électronique;
- L'état de la lumière verte sur le contrôle du brûleur (voir CONTRÔLE DE SÉCURITÉ DE COMBUSTION).

Brûleur no: _____ Modèle : _____ Date d'installation: _____

No téléphone pour service : Jour : _____ Soir : _____

Nom et adresse du distributeur : _____

RAPPORT D'EXAMEN :

CO_2 _____% Temp. de cheminée : _____ Tire à la cheminée : _____C.E.

Débit du gicleur : _____GPH Couleur de la fumée : _____

Tests effectués par : _____

25.3. FILTRES

Voir Section 12.5 - FILTRES

Max Caddy Owner's manual French (page 61 of 79)

26. SCHÉMA ÉLECTRIQUE UNITÉ À L'HUILE BECKETT

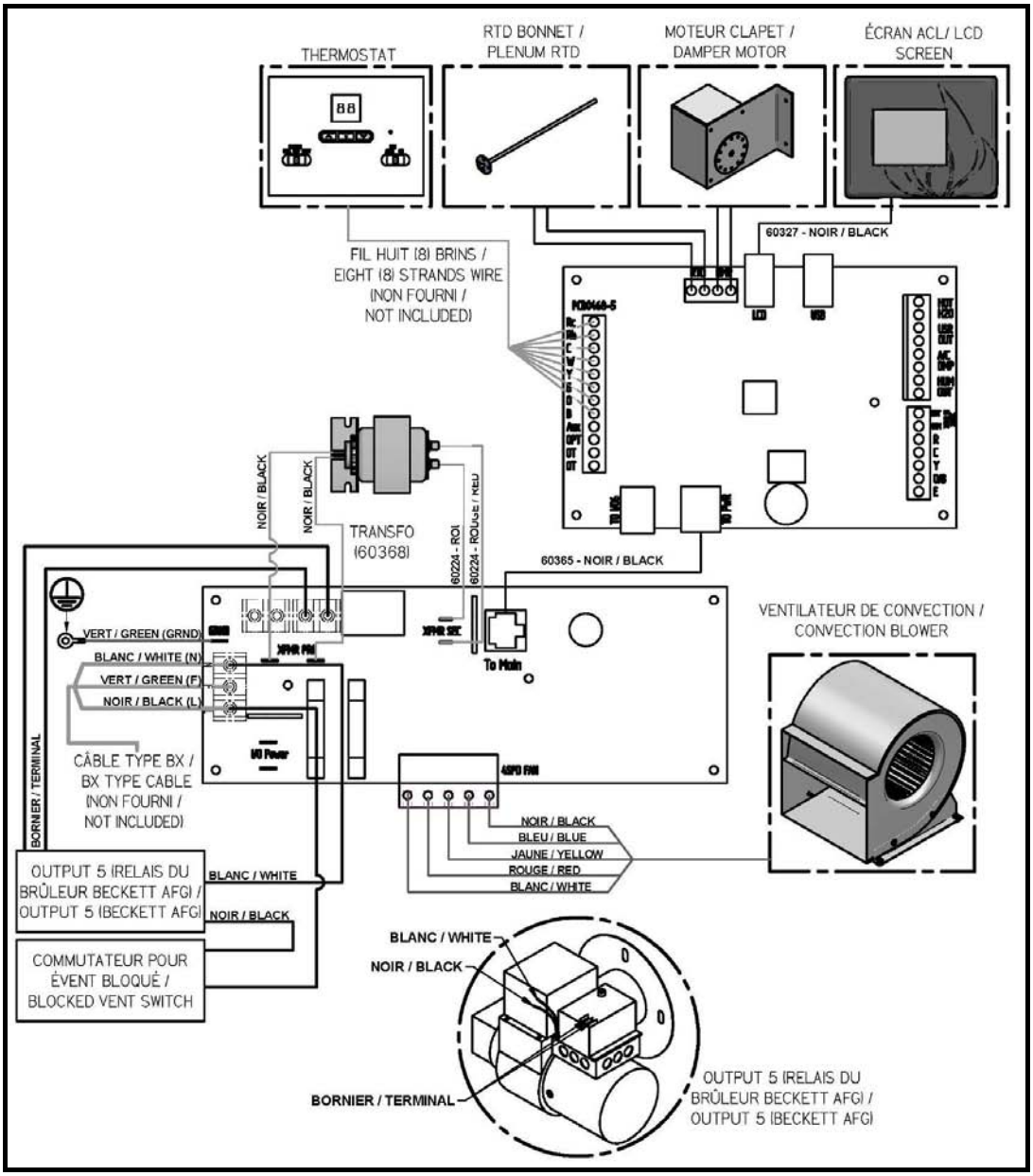

61

Max Caddy Owner's manual French (page 62 of 79)

27. SCHÉMA ÉLECTRIQUE UNITÉ À L'HUILE RIELLO

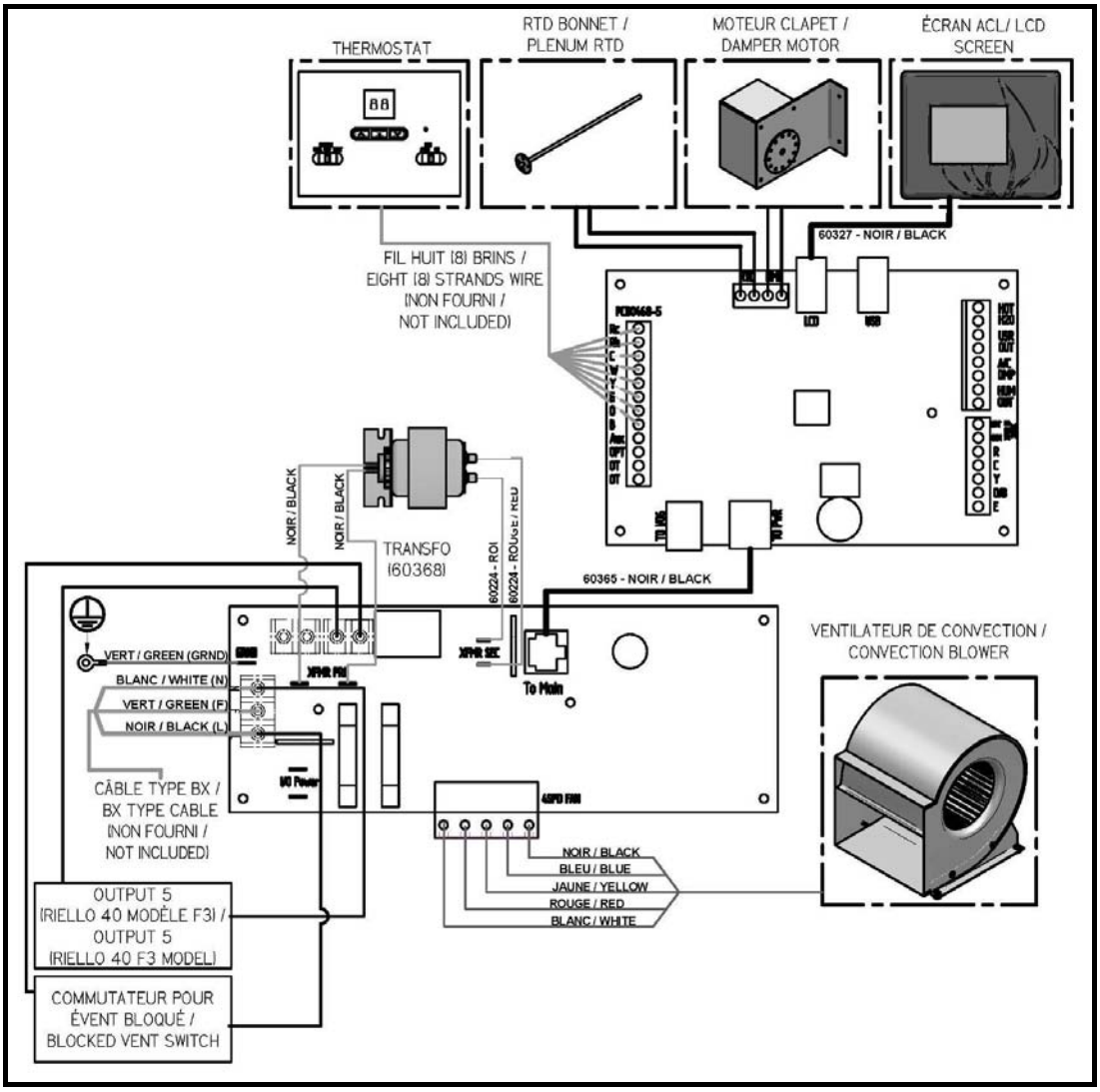

62

Max Caddy Owner's manual French (page 63 of 79)

28. RACCORDEMENTS OPTIONS CARTE LIAISON

28.1. CONSOMMATION ÉLECTRIQUE

Votre fournaise Max Caddy peut alimenter en courant le contrôle de diverses options. Les options pouvant être prises en charge sont décrites dans le tableau ci-dessous. Le courant 24V maximum disponible est de 1.66 ampères (transformateur 24V @ 40VA). Le tableau ci-dessous indique les consommations approximatives pour chacune des options pouvant être installées. Il est important de noter que ces consommations on été déterminées en fonction de la consommation maximale des options testées par le fabricant. Il est possible de trouver sur le marché des options ayant une consommation plus ou moins élevée que celles indiqués dans le tableau ci-dessous. Advenant le cas que la consommation combinée des options installées est plus élevée que 1.66 ampères, contactez notre service technique pour de plus amples information.

ATTENTION : UN BRANCHEMENT INCORRECT PEUT ENDOMMAGER LA CARTE LIAISON.

Option	Consommation approximative (mA)
Équipement 24V additionnel	500
Registre air climatisé	500
Humidificateur	500
Thermopompe	Courant fourni via transformateur additionnel (non fourni)
Thermostat (s'il n'est pas alimenté avec pile)	500

* Il est important que la somme des consommations des options installées ne dépasse pas 1.66 ampères

28.2. SONDE EXTÉRIEURE

* La sonde extérieur agit comme un interrupteur et donc ne consomme pas de courant.

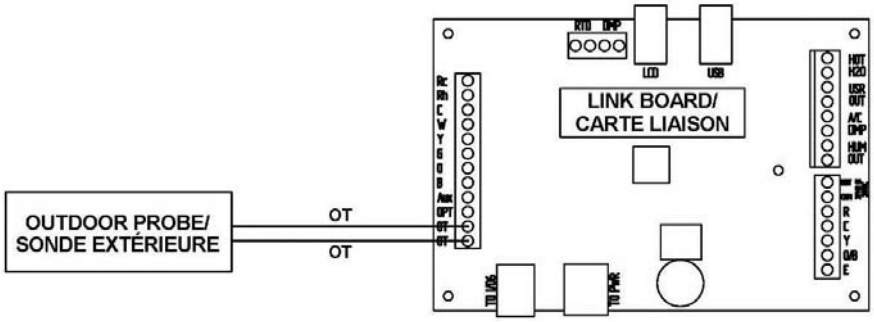

28.3. OPTION EAU CHAUDE

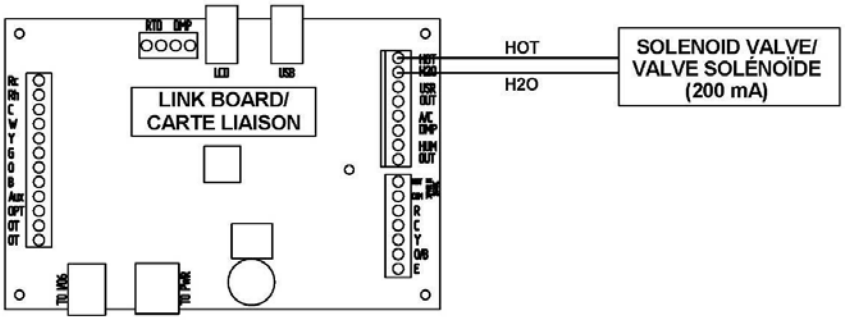

Max Caddy Owner's manual French (page 64 of 79)

28.4. ÉQUIPEMENT 24V ADDITIONNEL

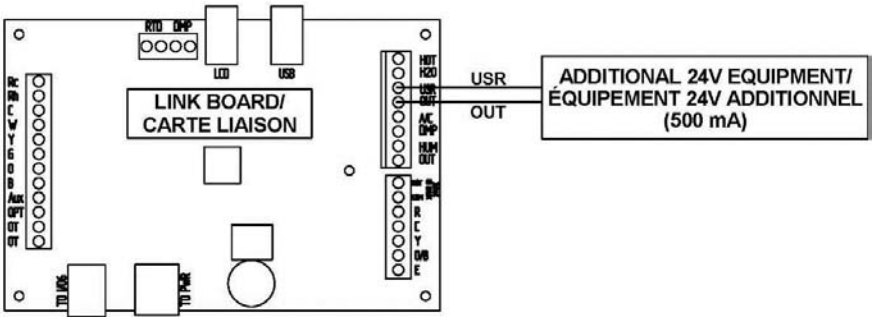

28.5. REGISTRE AIR CLIMATISÉ

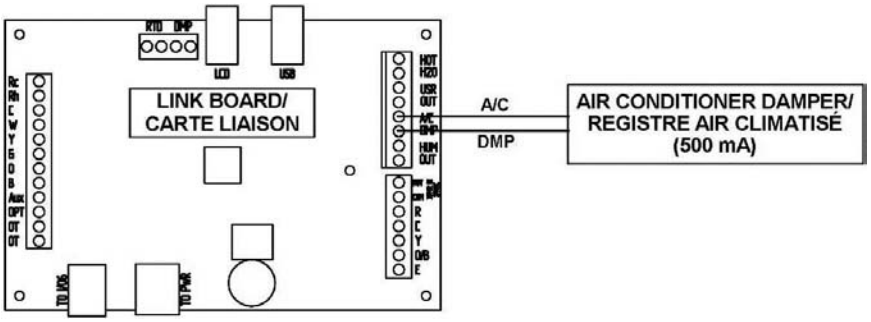

28.6. HUMIDIFICATEUR

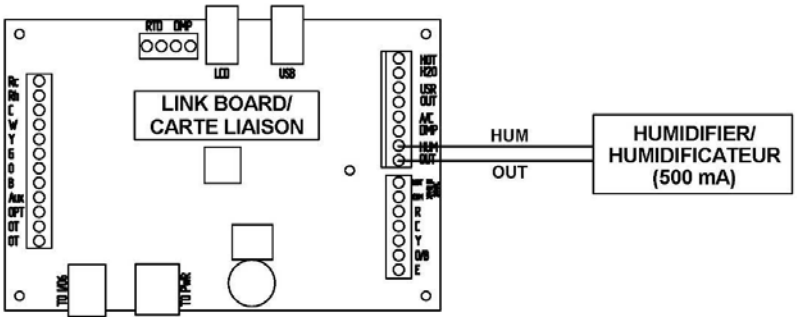

Max Caddy Owner's manual French (page 65 of 79)

28.7. THERMOPOMPE

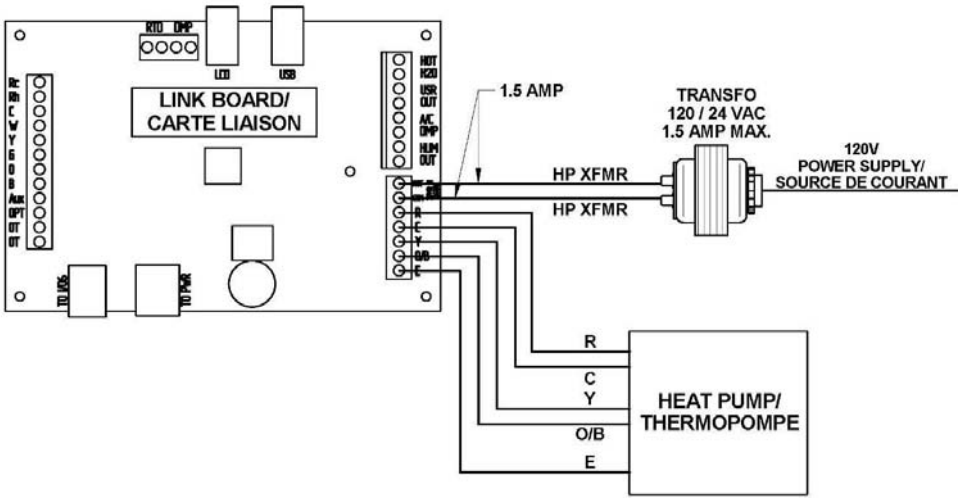

29. VUE ÉCLATÉE ET LISTE DE PIÈCES

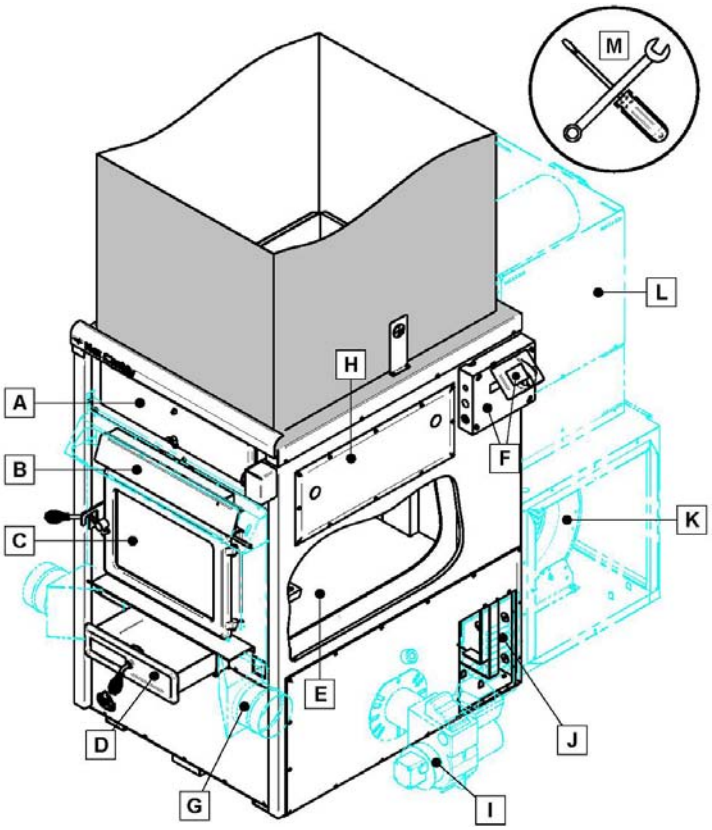

Max Caddy Owner's manual French (page 66 of 79)

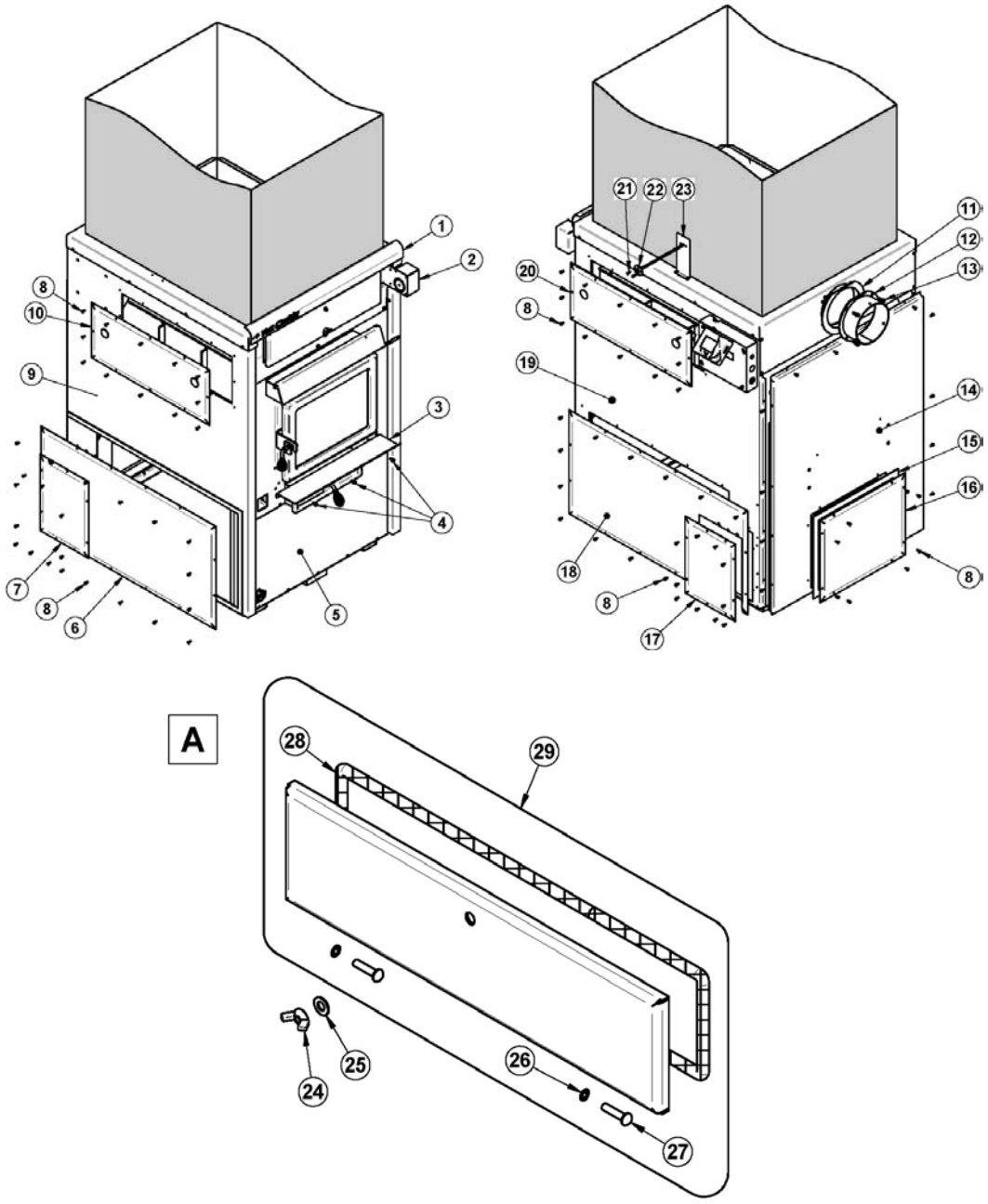

66

Max Caddy Owner's manual French (page 67 of 79)

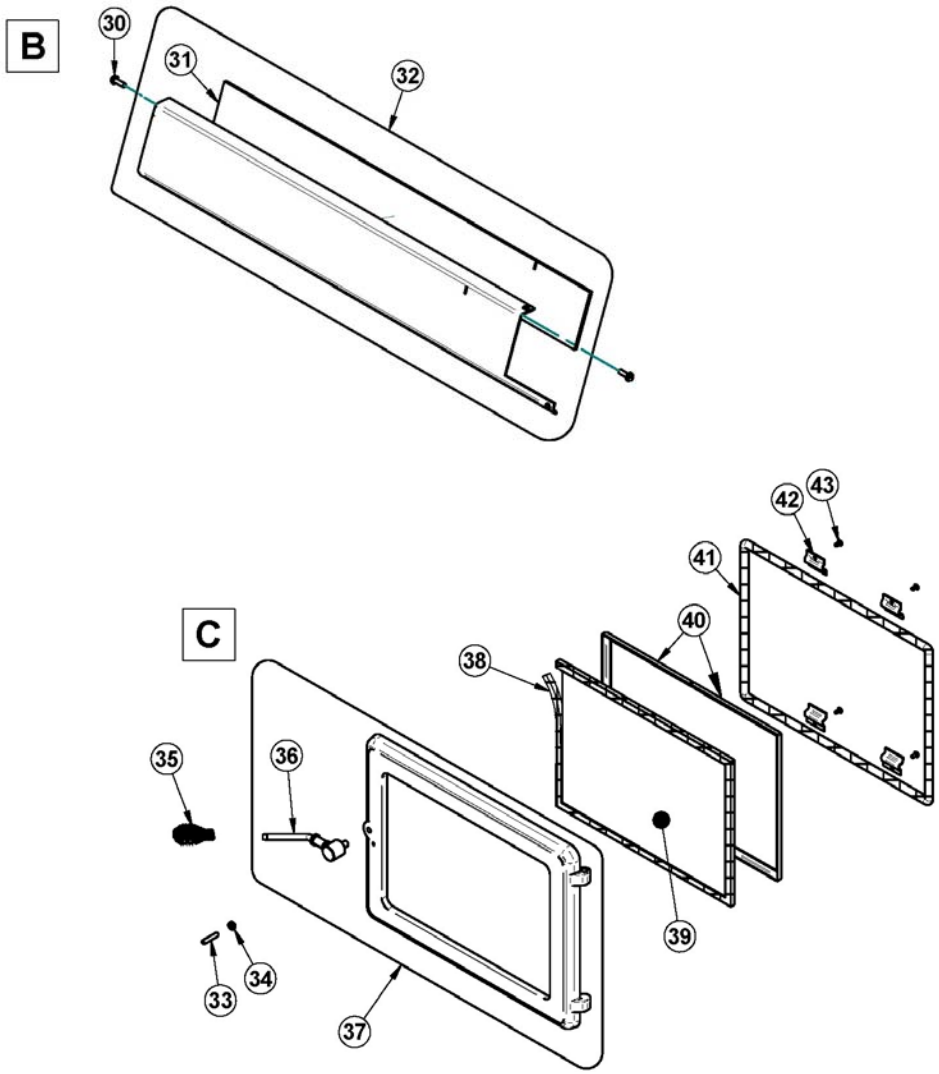

Max Caddy Owner's manual French (page 68 of 79)

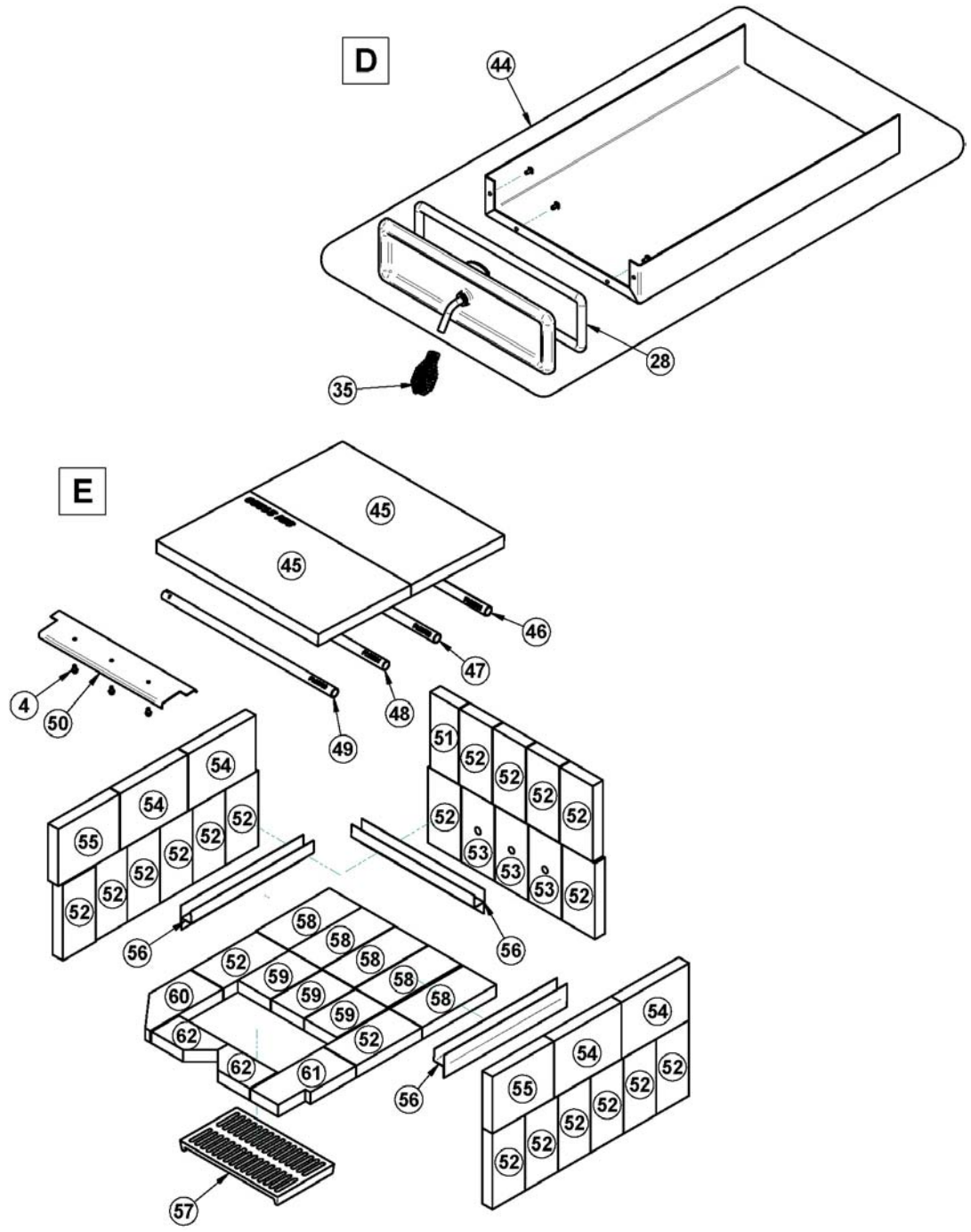

68

Max Caddy Owner's manual French (page 69 of 79)

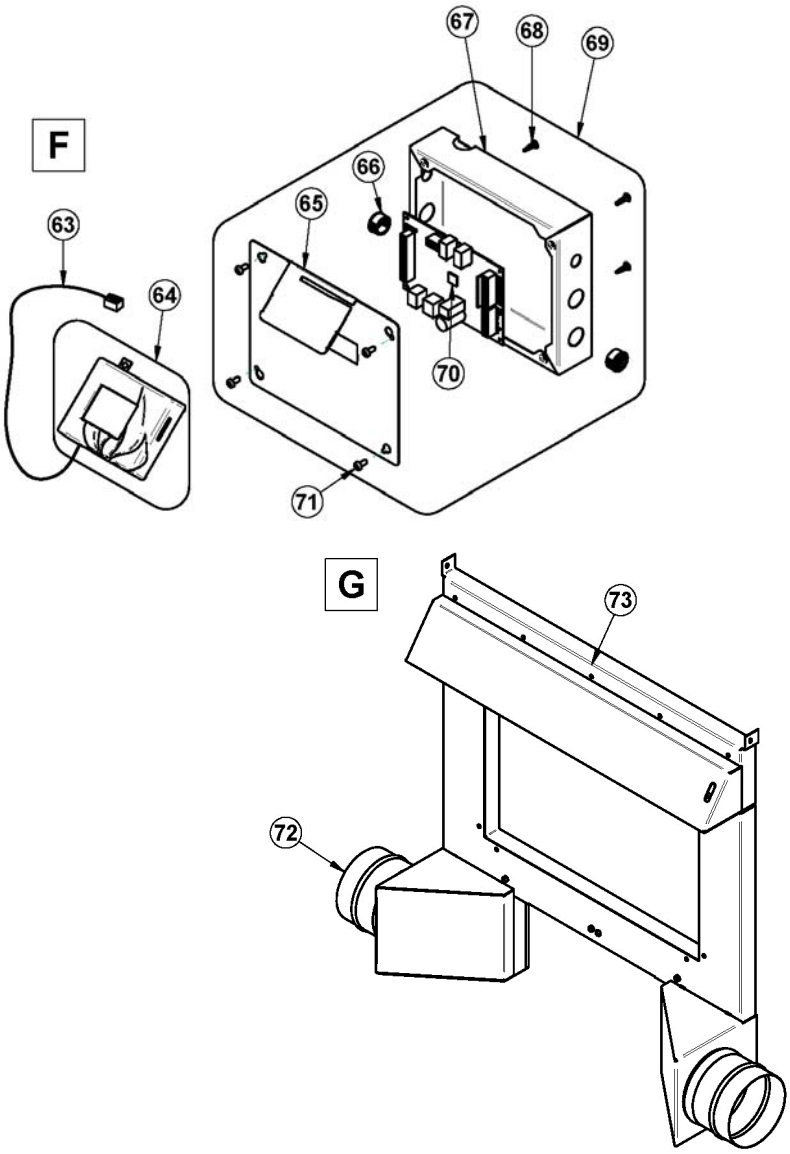

Max Caddy Owner's manual French (page 70 of 79)

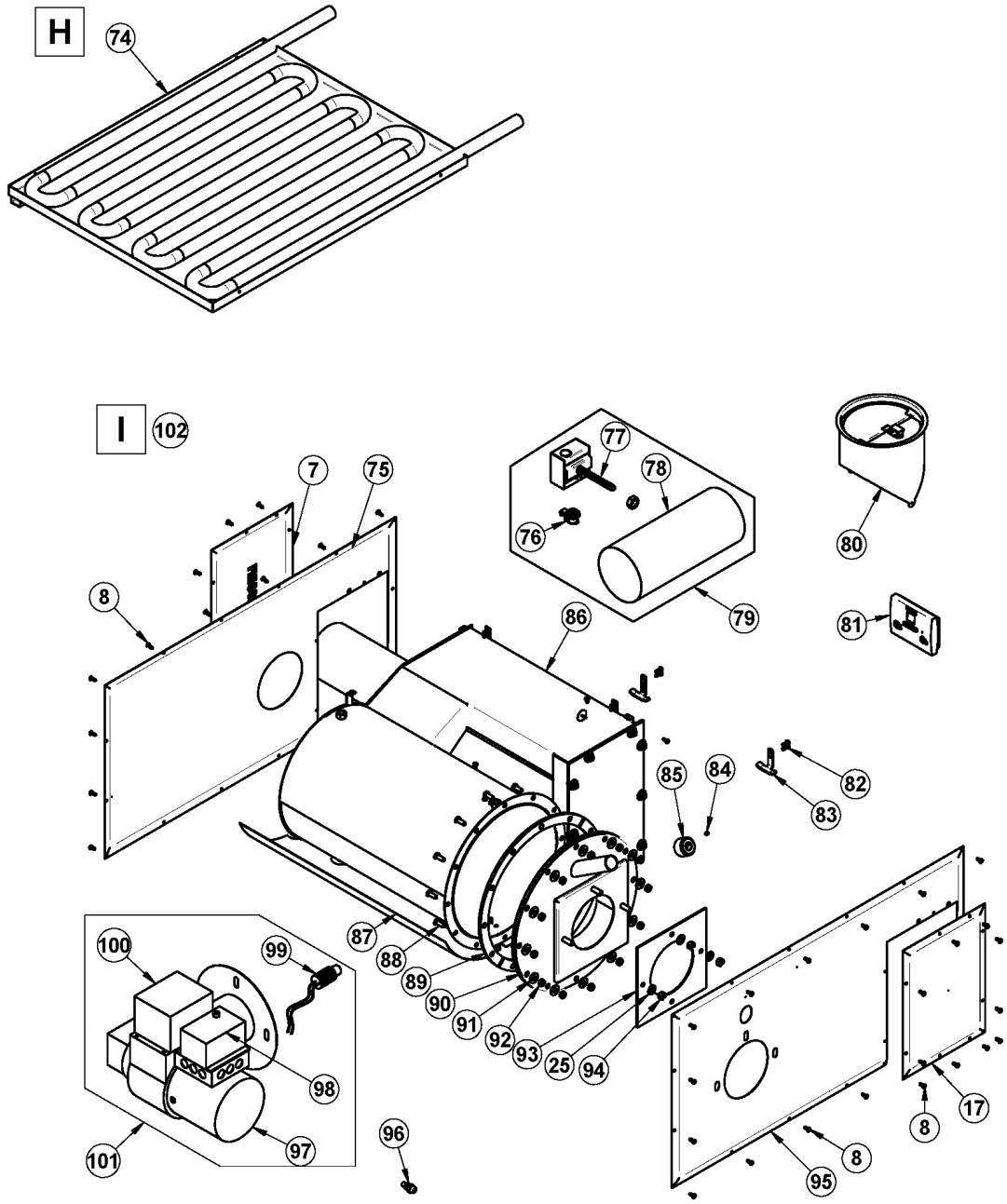

70

Max Caddy Owner's manual French (page 71 of 79)

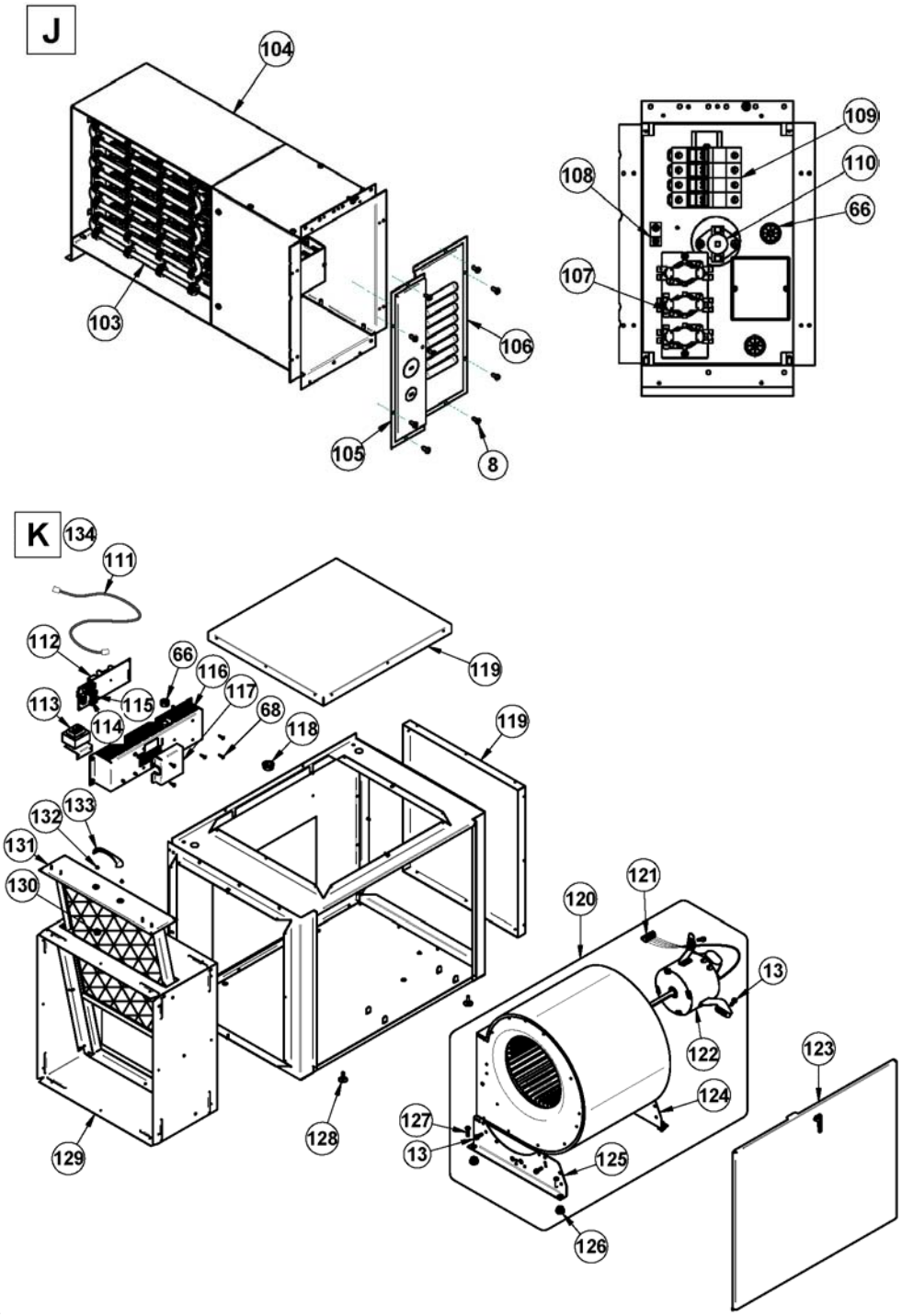

Max Caddy Owner's manual French (page 72 of 79)

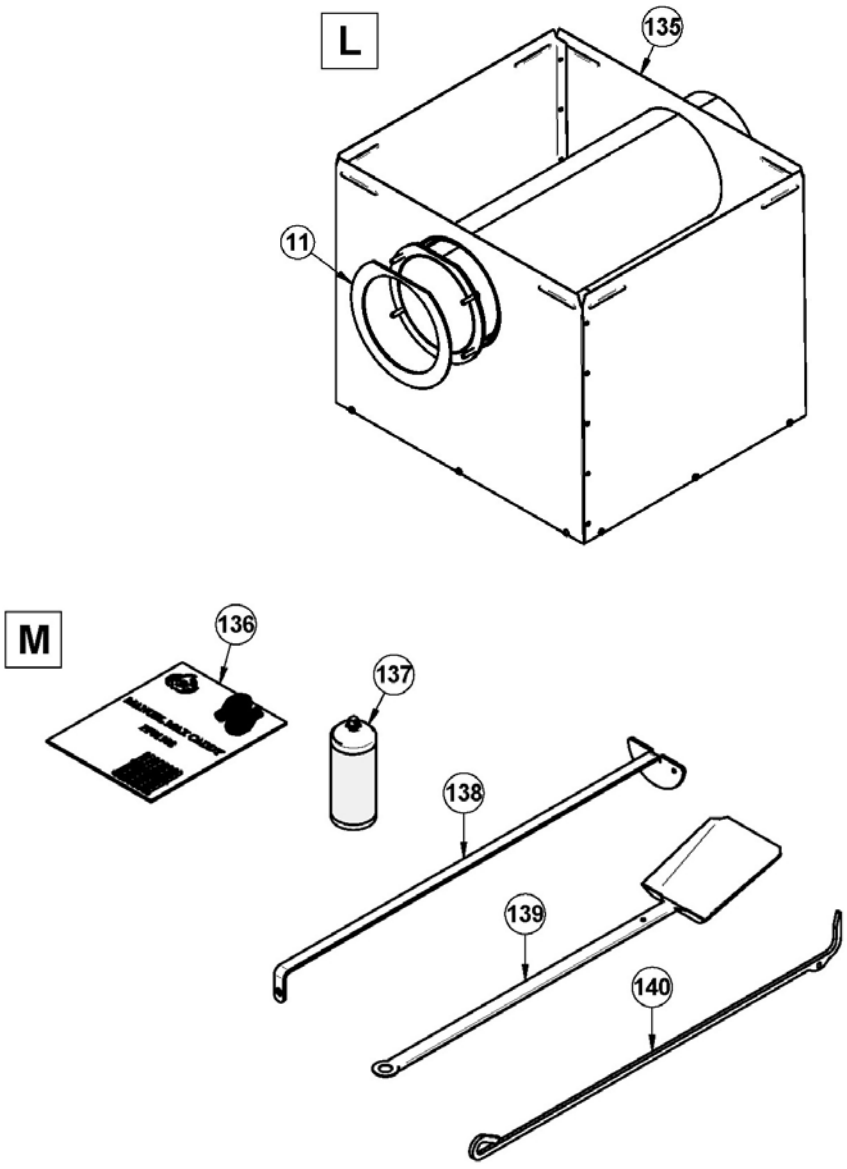

Max Caddy Owner's manual French (page 73 of 79)

IMPORTANT: IL S'AGIT D'INFORMATIONS ACTUALISÉES. Lors de la demande de service ou de pièces de remplacement pour votre poêle, s'il vous plaît fournir le numéro de modèle et le numéro de série. Nous nous réservons le droit de modifier les pièces en raison de mise à niveau technologique ou de disponibilité. Contactez un revendeur autorisé pour obtenir une de ces pièces. Ne jamais utiliser des matériaux de substitution. L'utilisation de pièces non approuvées peut entraîner de mauvaises performances et des risques pour votre sécurité.

#	Item	Description	Qté
1	PL56400	MOULURE DÉCORATIVE	1
2	51000	SERVO MOTEUR HONEYWELL 24V	1
3	PL56276	TABLETTE À CENDRE	1
4	30060	VIS FILETAGE COUPANT 1/4-20 x 1/2" F HEX RONDELLE SLOT ACIER C102 ZINC	3
5	PL56403	PANNEAU INFÉRIEUR AVANT DU CABINET	1
6	PL56412	PANNEAU GAUCHE DE L'OPTION ÉLÉMENT ÉLECTRIQUE	1
7	PL56413	COUVERCLE D'ACCÈS GAUCHE POUR L'UNITÉ ÉLECTRIQUE	1
8	30131	VIS NOIRE À MÉTAL #10 X 1/2" TYPE "A" PAN QUADREX	1
9	SE56406	PANNEAU GAUCHE DU CABINET AVEC ISOLANT	1
10	SE56415	PANNEAU GAUCHE AVEC ISOLANT OPTION SERPENTIN EAU	1
11	21221	JOINT D'ÉTANCHÉITÉ DE L'ADAPTATEUR DE CHEMINÉE	1
12	SE56352	ANNEAU DE CHEMINEE ASSEMBLE	1
13	30094	VIS HEX TÊTE RONDELLE 1/4-20 X 3/4" TYPE F ZINC	3
14	SE56408	PANNEAU ARRIÈRE DU CABINET	1
15	21342	ISOLANT COUVERCLE ARRIERE	1
16	PL56480	COUVERCLE ARRIÈRE DU CABINET	1
17	PL56411	COUVERCLE D'ACCÈS DROIT POUR L'UNITÉ ÉLECTRIQUE	1
18	PL56410	PANNEAU DROIT DE L'OPTION ÉLÉMENT ÉLECTRIQUE	1
19	SE56407	PANNEAU DROIT DU CABINET AVEC ISOLANT	1
20	SE56414	PANNEAU DROIT AVEC ISOLANT OPTION A L'EAU	1
21	30153	VIS À MÉTAL #8 X 1/2" PAN CARRÉ TEK NOIR AUTOPERFORANTE	2
22	SE44096	SONDE RTD 100 OHM 38" FILS AVEC CONNECTEUR	1
23	PL56343	PLAQUE DE SUPPORT DU RTD	1
24	30416	ÉCROU PAPILLON 3/8" -16	1
25	30205	RONDELLE EN ZINC DIA. INT. 13/32" X DIA. EXT. 13/16"	4
26	30055	BAGUE DE RETENUE POUR RIVET 5/16" DI X 0.512" DE	2
27	30168	RIVET DE PENTURE 5/16" DIA. X 1 1/4" L	2
28	AC06900	ENSEMBLE DE CORDON NOIR 1/2" ROND X 9' AVEC ADHÉSIF	1
29	SE56405	PORTE D'ACCÈS AUX ÉCHANGEURS DE CHALEUR	1
30	30502	VIS À FILETAGE COUPANT #8 - 32 X 1/2" TYPE F HEX TÊTE PLATE	2
31	21341	ISOLANT DE LA TRAPPE DE CONTRÔLE D'AIR	1
32	SE56322	CONTRÔLE D'AIR PRIMAIRE ASSEMBLÉ	1
33	30128	VIS D'AJUSTEMENT HEX 1/4"-20 X 1 1/4"	1
34	30100	ÉCROU HEX NOIR 1/4-20	1
35	30429	POIGNÉE SPIRALE 3/8" NICKEL	1
36	AC09151	ENSEMBLE DE REMPLACEMENT DE POIGNÉE	1
37	SE24027	PORTE DE FONTE AVEC POIGNÉE MAX CADDY	1
38	AC06400	CORDON DE VITRE NOIR PRÉENCOLLÉ 3/4" (PLAT) X 6'	1
39	SE56287	VITRE DE REMPLACEMENT AVEC CORDON 10 7/8" X 15 1/8"	1
40	PL56285	MOULURE DE VITRE	2
41	OA11400	ENSEMBLE SILICONE ET CORDON 3/4" X 8'	1
42	PL51351	FIXATION DE CADRE RETIENS VITRE	4

Max Caddy Owner's manual French (page 74 of 79)

#	Item	Description	Qté
43	30124	VIS #8 - 32 X 5/16" TRUSS QUADREX ZINC	4
44	SE56274	TIROIR ASSEMBLÉ	1
45	21220	COUPE-FEU EN C-CAST 19 3/4" X 11 3/8" X 1 1/4"	2
46	PL56764	TUBE D'AIR SECONDAIRE ARRIÈRE	1
47	PL56763	TUBE D'AIR SECONDAIRE CENTRE ARRIÈRE	1
48	PL56761	TUBE D'AIR SECONDAIRE CENTRE AVANT	1
49	PL56760	TUBE D'AIR SECONDAIRE AVANT	1
50	PL56356	COUPE CHALEUR DU DÉFLECTEUR D'AIR PRIMAIRE	1
51	PL36119	BRIQUE RÉFRACTAIRE 3 1/2" X 8" X 1 1/4"	1
52	29001	BRIQUE RÉFRACTAIRE 4" X 8 1/8" X 1 1/4" HD	20
53	21343	BRIQUE RÉFRACTAIRE TROUÉE 4" X 8" X 1 1/4"	3
54	29005	BRIQUE RÉFRACTAIRE 6" X 8 1/4" X 1 1/4" HD	4
55	PL36231	BRIQUE RÉFRACTAIRE 6" X 7 1/2" X 1 1/4"	2
56	PL56286	SUPPORT DE BRIQUE	3
57	24099	GRILLE À CENDRES EN FONTE 12" X 7"	1
58	29011	BRIQUE RÉFRACTAIRE 4" X 9" X 1 1/4" HD	5
59	PL36234	BRIQUE RÉFRACTAIRE 4" X 6 1/4" X 1 1/4"	3
60	PL36059	BRIQUE COUPEE 4" X 8 7/8" X 3 3/8" X 3 7/8"	1
61	PL36232	BRIQUE RÉFRACTAIRE 4" X 8 3/4" X 1 1/4" X 1/2" X 3 1/4	1
62	PL36233	BRIQUE RÉFRACTAIRE 3 1/2" X 6" X 1 1/4"	2
63	60327	FIL DE JONCTION CARTE CONTROLE ET LCD	1
64	SE56777	CARTE À ÉCRAN TACTILE (LCD) AVEC BOÎTIER MAX CADDY	1
65	PL48251	COUVERCLE DU BOÎTIER DE CARTE ÉLECTRONIQUE	1
66	30412	MANCHON UNIVERSEL INSTANTANÉ NOIR	1
67	PL48250	BOITIER DE CARTE ÉLECTRONIQUE	1
68	30408	ATTACHE DE CARTE ÉLECTRONIQUE	9
69	SE56823	BOITIER DE CARTE ÉLECTRONIQUE ASSEMBLÉ	1
70	PL56823	CARTE MAITRESSE LIMITEUR ÉLECTRONIQUE PROGRAMMÉE	1
71	30154	VIS NOIRE #10 X 5/8" CARRÉ TYPE A	4
72	49068	ADAPTATEUR 5" POUR ENSEMBLE D'ENTRÉE D'AIR FRAIS	2
73	PA08560	ADAPTATEUR D'ENTRÉE D'AIR FRAIS 5"	1
74	PA08550	ENSEMBLE DU SERPENTIN POUR EAU CHAUDE DOMESTIQUE	1
75	PL56466	PANNEAU DE L'UNITÉ À L'HUILE GAUCHE	1
76	60201	CONNECTEUR 1 VIS 3/8" POUR FIL BX	1
77	60216	FIL ELECTRIQUE BX 14/2 50-003-500	1
78	49021	TUYAU 5" DU SYSTÈME DE SÉCURITÉ WMO-1 AVEC TROU DE 41/64	1
79	SE48210	COMMUTATEUR POUR ÉVENT BLOQUÉ UNITÉ À L'HUILE	1
80	51018	VOLET BAROMÉTRIQUE 6", 7" ET 8"	1
81	44134	THERMOSTAT MILLIVOLT - BLANC	1
82	30026	VIS À FILETAGE COUPANT 10-24 F 5/8" HEX WASHER HEAD	4
83	PL56435	PATTE DE L'UNITÉ À L'HUILE	2
84	30095	VIS HEX 1/4-20 X 1/4"	1
85	SE53352	BOUCHON DE VISION SCELLÉ	1
86	SE56420	CHAMBRE A COMBUSTION UH-MAX CADDY	1
87	PL56345	DÉFLECTEUR ARRIÈRE DE LA CHAMBRE À COMBUSTION HUILE	1
88	30092	BOULON 5/16 - 18 X 3/4" HEX GRADE 5	12

Max Caddy Owner's manual French (page 75 of 79)

#	Item	Description	Qté
89	21079	JOINT D'ÉTANCHÉITÉ COUVERCLE UNITÉ À L'HUILE	1
90	SE53269	COUVERCLE ASSEMBLÉ DE L'UNITÉ À L'HUILE AVEC TUBE VISION	1
91	30210	RONDELLE 29/32" OD X 3/8" ID ZINC	12
92	30425	ÉCROU LAITON 5/16 - 18 HEX	12
93	21085	JOINT D'ÉTENCHÉITÉ BRÛLEUR / UNITÉ À L'HUILE	1
94	30423	ÉCROU 3/8" - 16 HEX ZINC	3
95	PL56465	PANNEAU DE L'UNITÉ À L'HUILE DROIT	1
96	51024	GICLEUR DELAVAN .65GPH X 70° W	1
97	60043	POMPE À VIDANGE D'HUILE BECKETT AVEC SOLENOID	1
98	44019	CONTRÔLE PRIMAIRE HW	1
99	44018	CELLULE PHOTO-ÉLECTRIQUE BRÛLEUR BECKETT	1
100	44023	ALLUMEUR BRÛLEUR BECKETT (TRANSFORMATEUR)	1
101	51007	BRÛLEUR À L`HUILE RIELLO	1
101	51006	BRÛLEUR BECKETT AFG	1
102	PA08512	UNITÉ À L'HUILE BECKETT	1
102	PA08511	UNITÉ À L'HUILE RIELLO	1
103	60253	ÉLÉMENT ÉLECTRIQUE 10 kW (DOUBLE 5 kW)	1
103	60245	ÉLÉMENT ÉLECTRIQUE 5 kW SIMPLE	1
104	PA08535	ÉLÉMENT ÉLECTRIQUE 20 kW	1
104	PA08545	ÉLÉMENT ÉLECTRIQUE 25 kW	1
105	PL56507	COUVERCLE GAUCHE DE L'UNITÉ ÉLECTRIQUE	1
106	PL56508	COUVERCLE D'AÉRATION UNITÉ ÉLECTRIQUE	1
107	60202	SÉQUENCEUR 15S X 441	1
108	60207	CONNECTEUR ALUMINIUM 14-6 STUD 17/64	1
109	60194	PORTE FUSIBLE 30A. 600V PROTECTION 1 POLE	1
110	60237	THERMODISQUE POUR ÉLÉMENT ÉLECTRIQUE L170 MANUEL	1
111	60365	FIL COMMUNICATION 8 BRINS 60"	1
112	44182	CARTE PUISSANCE LIMITEUR ÉLECTRONIQUE	1
113	60368	TRANSFORMATEUR 120/24V CLASS 2 40 VA	1
114	44136	FUSIBLE 12A / 250V / DIA. 1/4" X 1 1/4" L	1
115	44137	FUSIBLE 1A / 250V / DIA. 1/4" X 1 1/4" L	1
116	PL48243	BOITIER DE CARTE PUISSANCE	1
117	PL48242	COUVERCLE D'ACCÈS À LA CARTE DE PUISSANCE	1
118	30406	MANCHON À EMBOÎTEMENT INSTANTANÉ NOIR 1 3/4" X 7/8" X 1"	1
119	PL56417	COUVERCLE AMOVIBLE DU BOÎTIER DE VENTILATEUR	1
120	SE56512	VENTILATEUR ASSEMBLÉ AVEC MOTEUR ENTRAÎNEMENT DIRECT 1/2 HP	1
121	44186	CONNECTEUR 5 POSITIONS	1
122	51038	MOTEUR 1/2HP, 4 VIT. POUR G-10 DD	1
123	SE56419	PORTE D'ACCÈS AU VENTILATEUR ASSEMBLÉE	1
124	30334	SUPPORT DE CAGE GAUCHE POUR VENT. G10 10-458-085	1
125	30336	SUPPORT DE CAGE DROIT POUR VENT. G10	1
126	30335	COUSSINET ANTI-VIBRATION POUR VENTILATEUR	4
127	30109	BOULON HEX 1/4" - 20 X 1"	4
128	30536	BOULON DE NIVELAGE 1/4-20 X 1"	2
129	SE56418	SUPPORT DE CONDUIT ASSEMBLÉ	1
130	21231	FILTRE À AIR EN CARTON 20" X 16" X1"	1

Max Caddy Owner's manual French (page 76 of 79)

#	Item	Description	Qté
131	SE56450	TIROIR POUR FILTRE	1
132	30108	VIS MÉCANIQUE M4 X 4MM TRONÇONNIQUE PHILLIPS ZINC	2
133	28062	POIGNÉE DE TIROIR NOIRE 3 25/32"	1
134	PA08566	ENSEMBLE DU VENTILATEUR	1
135	PA08500	ENSEMBLE DE PLÉNUM DE RETOUR D'AIR SUR LE DESSUS	1
136	SE45833	KIT MANUEL D'INSTRUCTION MAX CADDY	1
137	AC05961	PEINTURE AÉROSOL GRISE 424C PSG	1
137	AC05963	PEINTURE POUR POÊLE NOIR MÉTALLIQUE - 85 g (3oz) AÉROSOL	1
138	PL48170	GRATTOIR POUR ÉCHANGEUR DE CHALEUR	1
139	PL48171	PELLE À CENDRES	1
140	PL48173	TISONNIER	1

Max Caddy Owner's manual French (page 77 of 79)

POURQUOI ACHETER D'UN DÉTAILLANT AUTORISÉ PSG?

Pour que votre fournaise PSG puisse procurer confort et économie d'énergie dans votre foyer pendant de nombreuses années, le choix de l'installateur est primordial. Un détaillant autorisé PSG s'assurera que le système est optimisé et installé selon les normes en vigueur. Étant donné l'importance de l'installation, PSG recommande la compétence d'un professionnel accrédité par la Régie du bâtiment afin que la fournaise offre son plein rendement. C'est pourquoi PSG offre une garantie supplémentaire qui couvre les frais de main-d'œuvre si votre fournaise a été achetée via un détaillant autorisé PSG.

Si vous désirez profiter du meilleur service sur le marché et réaliser des économies de chauffage substantielles, un seul choix s'impose : **un détaillant autorisé PSG**.

Max Caddy Owner's manual French (page 78 of 79)

GARANTIE À VIE LIMITÉE PSG (DE BASE)

La garantie du fabricant ne s'applique qu'à l'acheteur au détail original et n'est pas transférable. La présente garantie ne couvre que les produits neufs qui n'ont pas été modifiés, altérés ou réparés depuis leur expédition de l'usine. Les produits couverts par cette garantie doivent avoir été fabriqués après la date de révision indiquée en bas de page. Il faut fournir une preuve d'achat (facture datée), le nom du modèle et le numéro de série au détaillant PSG lors d'une réclamation sous garantie.

La présente garantie ne s'applique que pour un usage résidentiel normal. Les dommages provenant d'une mauvaise utilisation, d'un usage abusif, d'une mauvaise installation, d'un manque d'entretien, de surchauffe, de négligence ou d'un accident pendant le transport, d'une panne de courant, d'un manque de tirage ou d'un retour de fumée ne sont pas couverts par la présente garantie.

La présente garantie ne couvre pas les égratignures, la corrosion, la déformation ou la décoloration. Tout défaut ou dommage provenant de l'utilisation de pièces non autorisées ou autres que des pièces originales annule la garantie. Un technicien compétent reconnu doit procéder à l'installation en conformité avec les instructions fournies avec le produit et avec les codes du bâtiment locaux et nationaux. Tout appel de service relié à une mauvaise installation n'est pas couvert par la présente garantie.

Le fabricant peut exiger que les produits défectueux lui soient retournés ou que des photos numériques lui soient fournies à l'appui de la réclamation. Les produits retournés doivent être expédiés port payé au fabricant pour étude. Si le produit est défectueux, le fabricant réparera ou remplacera le produit défectueux. Les frais de transport pour le retour du produit à l'acheteur seront payés par le manufacturier. Tous les frais de pièces couverts par la présente garantie sont limités au tableau ci-dessous.

Le fabricant peut, à sa discrétion, décider de réparer ou de remplacer toute pièce ou unité après inspection et étude du défaut. Le fabricant peut, à sa discrétion, se décharger de toutes ses obligations en ce qui concerne la présente garantie en remboursant le prix de gros de toute pièce défectueuse garantie. Le fabricant ne peut, en aucun cas, être tenu responsable de tout dommage extraordinaire, indirect ou consécutif de quelque nature que ce soit qui dépasserait le prix d'achat original du produit. Les pièces couvertes par une garantie à vie sont sujettes à une limite d'un seul remplacement sur la durée de vie utile du produit. Cette garantie s'applique aux produits achetés après le 1er avril 2013.

DESCRIPTION	APPLICATION DE LA GARANTIE	
	PIÈCES	MAIN D'ŒUVRE
Chambre de combustion (soudures seulement), pièces coulées et échangeur de chaleur (soudures seulement).	À vie	n/a
Pièces de la chambre à combustion en acier inoxydable, tubes d'air secondaire*, habillage et déflecteurs, tiroir à cendres, et placage (défaut de fabrication*).	5 ans	n/a
Pièces de la chambre à combustion en acier, moulures de vitre, ensemble de poignée, coupe-feu en vermiculite*, et coupe-feu en *C-Cast**.	3 ans	n/a
Brûleur à huile, éléments électriques, ventilateurs, capteurs thermiques, rhéostats, relais, servo-moteur, limiteur, carte électronique, filage et autres commandes.	2 ans	n/a
Peinture (écaillage), verre céramique (bris thermique seulement*), joints d'étanchéité, isolants et laine céramique.	1 an	n/a
Briques réfractaires.	n/a	n/a

**Photos exigées*

Si votre appareil ou une pièce sont défectueux, communiquez immédiatement avec votre détaillant **PSG.** Avant d'appeler, ayez en main les renseignements suivants pour le traitement de votre réclamation sous garantie :

- Votre nom, adresse et numéro de téléphone;
- La facture et le nom du détaillant;
- Le numéro de série et le nom du modèle tel qu'indiqué sur la plaque signalétique de l'appareil;
- La nature du défaut et tout renseignement important.

Avant d'expédier votre appareil ou une pièce défectueuse à notre usine, vous devez obtenir un numéro d'autorisation de votre détaillant PSG. Toute marchandise expédiée à notre usine sans autorisation sera automatiquement refusée et retournée à l'expéditeur.

Max Caddy Owner's manual French (page 79 of 79)

GARANTIE À VIE LIMITÉE PSG (PRIVILÈGE)

La garantie du fabricant ne s'applique qu'à l'acheteur au détail original et n'est pas transférable. La présente garantie ne couvre que les produits neufs qui n'ont pas été modifiés, altérés ou réparés depuis leur expédition de l'usine et achetés auprès d'un détaillant autorisé. Les produits couverts par cette garantie doivent avoir été fabriqués après la date de révision indiquée en bas de page. Il faut fournir une preuve d'achat (facture datée), le nom du modèle et le numéro de série au détaillant PSG lors d'une réclamation sous garantie.

La présente garantie ne s'applique que pour un usage résidentiel normal. Les dommages provenant d'une mauvaise utilisation, d'un usage abusif, d'une mauvaise installation, d'un manque d'entretien, de surchauffe, de négligence ou d'un accident pendant le transport, d'une panne de courant, d'un manque de tirage ou d'un retour de fumée ne sont pas couverts par la présente garantie.

La présente garantie ne couvre pas les égratignures, la corrosion, la déformation ou la décoloration. Tout défaut ou dommage provenant de l'utilisation de pièces non autorisées ou autres que des pièces originales annule la garantie. Un technicien compétent reconnu doit procéder à l'installation en conformité avec les instructions fournies avec le produit et avec les codes du bâtiment locaux et nationaux. Tout appel de service relié à une mauvaise installation n'est pas couvert par la présente garantie.

Le fabricant peut exiger que les produits défectueux lui soient retournés ou que des photos numériques lui soient fournies à l'appui de la réclamation. Les produits retournés doivent être expédiés port payé au fabricant pour étude. Si le produit est défectueux, le fabricant réparera ou remplacera le produit défectueux. Les frais de transport pour le retour du produit à l'acheteur seront payés par le manufacturier. Tout travail de réparation couvert par la garantie et fait au domicile de l'acheteur par un technicien compétent reconnu doit d'abord être approuvé par le fabricant. Les frais de main-d'œuvre et de réparation portés au compte du fabricant sont basés sur une liste de taux prédéterminés et ne doivent pas dépasser le prix de gros de la pièce de rechange. Tous les frais de pièces et main d'œuvre couverts par la présente garantie sont limités au tableau ci-dessous.

Le fabricant peut, à sa discrétion, décider de réparer ou de remplacer toute pièce ou unité après inspection et étude du défaut. Le fabricant peut, à sa discrétion, se décharger de toutes ses obligations en ce qui concerne la présente garantie en remboursant le prix de gros de toute pièce défectueuse garantie. Le fabricant ne peut, en aucun cas, être tenu responsable de tout dommage extraordinaire, indirect ou consécutif de quelque nature que ce soit qui dépasserait le prix d'achat original du produit. Les pièces couvertes par une garantie à vie sont sujettes à une limite d'un seul remplacement sur la durée de vie utile du produit. Cette garantie s'applique aux produits achetés après le 1er avril 2013.

DESCRIPTION	APPLICATION DE LA GARANTIE	
	PIÈCES	MAIN D'ŒUVRE
Chambre de combustion (soudures seulement), pièces coulées et échangeur de chaleur (soudures seulement).	À vie	3 ans
Pièces de la chambre à combustion en acier inoxydable, tubes d'air secondaire*, habillage et déflecteurs, tiroir à cendres, et placage (défaut de fabrication*).	5 ans	3 ans
Pièces de la chambre à combustion en acier, moulures de vitre, ensemble de poignée, coupe-feu en vermiculite*, et coupe-feu en *C-Cast**.	3 ans	1 an
Brûleur à huile, éléments électriques, ventilateurs, capteurs thermiques, rhéostats, relais, servo-moteur, limiteur, carte électronique, filage et autres commandes.	2 ans	1 an
Peinture (écaillage), verre céramique (bris thermique seulement*), joints d'étanchéité, isolants et laine céramique.	1 an	n/a
Briques réfractaires.	n/a	n/a

*Photos exigées

Si votre appareil ou une pièce sont défectueux, communiquez immédiatement avec votre détaillant **PSG.** Avant d'appeler, ayez en main les renseignements suivants pour le traitement de votre réclamation sous garantie :

- Votre nom, adresse et numéro de téléphone;
- La facture et le nom du détaillant;
- Le numéro de série et le nom du modèle tel qu'indiqué sur la plaque signalétique de l'appareil;
- La nature du défaut et tout renseignement important.

Avant d'expédier votre appareil ou une pièce défectueuse à notre usine, vous devez obtenir un numéro d'autorisation de votre détaillant PSG. Toute marchandise expédiée à notre usine sans autorisation sera automatiquement refusée et retournée à l'expéditeur.

MAxCaddy Label-1

Intertek

LISTED SOLID FUEL FIRED CENTRAL FURNACE

FOURNAISE CENTRALE À COMBUSTIBLE SOLIDE HOMOLOGUÉE

MODEL / MODÈLE : MAX CADDY

STANDARDS / NORMES D'ESSAI:
Certified to/Certifié selon CAN-CSA B366.1
Conforms to/Conforme à UL 391
Conforms to/Conforme à CSA B-415.1-10
Conforms to/Conforme à ASTM E2515-2011
(JULY / JUILLET 2008)

Options :
Water Heater / Chauffe-eau
Oil Unit / Unité à l'huile
Electric Unit / Unité Électrique

Serial Number / No. de Série: 1

FOR USE WITH WOOD ONLY / POUR UTILISATION AVEC BOIS SEULEMENT

CONTACT LOCAL BUILDING OFFICIALS ABOUT THE RESTRICTIONS AND INSTALLATION INSPECTION IN YOUR AREA.
COMMUNIQUER AVEC LES AUTORITÉS LOCALES DU BÂTIMENT ET DE LA PRÉVENTION DES INCENDIES AU SUJET DES RESTRICTIONS D'INSTALLATION DANS VOTRE SECTEUR.

FUEL / COMBUSTIBLE : WOOD / BOIS
AC CURRENT ONLY / COURANT CA SEULEMENT

CAUTION : Use copper wire no.12 AWG suitable for 167°F.

ATTENTION : Employer des fils d'alimentation adéquats pour 75°C.

INSTALL AND USE ONLY IN ACCORDANCE WITH SBI STOVE BUILDER INTERNATIONAL INSTALLATION AND OPERATION INSTRUCTIONS.
L'INSTALLATION ET L'OPERATION DOIT SE FAIRE SELON LES INSTRUCTIONS D'INSTALLATION ET D'UTILISATION DE SBI FABRICANT DE POÊLES INTERNATIONAL.

PREVENT HOUSE FIRES

- Type of chimney: chimney suitable for use with solid fuel.
- Use with wood only. Do not use other fuels.
- Load fuel carefully, or damage may results.
- Do not use chemicals or fluids to start the fire.
- The heat exchanger, flue pipe and chimney must be cleaned regularly to remove accumulated creosote and ash. Ensure that the heat exchanger, flue pipe and chimney are cleaned during the summer months. The appliance, flue pipe and chimney must be in good condition.
- Do not use this furnace without ducts.
- In the USA, the unit must be installed on a non-combustible floor pad extending at least 16 inches (410 mm) in front of the door opening and at least 8 inches (205 mm) on each side of the door opening. In Canada, the unit must be installed on a non-combustible floor pad extending at least 18 inches (460 mm) in front of the door opening and at least 8 inches (205 mm) at the back and on each side of the unit. The floor pad must have a thickness of at least 0.015" (0.38mm). Consult owner's manual for more details.
- May be connected to ductwork that is still connected to another furnace.
- **Do not connect this unit to a chimney flue serving another appliance.**
- Do not connect ductwork so that reverse flow is possible.
- Do not relocate or bypass any of the safety controls in the original furnace installation.
- Caution: Maintain combustion air to the unit, air starvation is dangerous.
- **The furnace can be used during a power-loss. Remove air filter and let the damper stay in closed position. See owner's manual for optimum performance under those conditions.**
- Do not attempt to light a fire when there is oil vapor present.
- See owner's manual for electrical diagram.
- For more information, refer to owner's manual.

PRÉVENEZ LES INCENDIES

- Type de cheminée: cheminée conçue pour utilisation avec combustible solide.
- Brûler du bois seulement. Ne pas utiliser d'autres combustibles.
- Charger avec soin pour éviter d'endommager la fournaise.
- N'utiliser aucun produit chimique ou liquide pour allumer le feu.
- Nettoyer l'échangeur de chaleur, le conduit de raccordement et la cheminée pour enlever la créosote et les cendres accumulées. S'assurer que l'échangeur de chaleur, le conduit de raccordement et la cheminée sont nettoyés à la fin de la saison hivernale. L'appareil, le conduit de raccordement et la cheminée doivent être en bon état.
- Ne pas utiliser cette fournaise sans conduit.
- Aux USA, l'appareil doit être installé sur une plaque incombustible qui excède le devant de l'ouverture de porte d'au moins 16 pouces (410 mm) ainsi que chaque côté de l'ouverture de porte d'au moins 8 pouces (205 mm). Au Canada, l'appareil doit être installé sur une plaque incombustible qui excède le devant de l'ouverture de porte d'au moins 18 pouces (460 mm) ainsi que l'arrière et chaque côté de l'appareil d'au moins 8 pouces (205 mm). La plaque incombustible doit posséder une épaisseur minimale de 0.015" (0.38 mm). Consultez le manuel d'instructions pour plus de détails.
- Peut-être raccordé à des conduits raccordés à un autre générateur d'air chaud.
- **Ne pas brancher cette unité à une cheminée servant à un autre appareil.**
- Ne pas raccorder aux conduits de ventilation de façon à permettre un débit inversé.
- Ne pas relocaliser ou contourner les contrôles de sécurité originaux de la fournaise.
- Attention: Assurer l'air de combustion adéquate à l'appareil, une privation d'air est dangereuse.
- **Cette fournaise peut être utilisée lors d'une panne de courant. Le filtre à air doit être retiré et le registre d'entrée d'air doit être laissé fermé. Voir le manuel d'instructions pour des performances optimales dans ces conditions.**
- Ne pas allumer lorsque des vapeurs d'huile sont présentes.
- Voir le manuel d'instructions pour les diagrammes électriques.
- Pour de plus amples renseignements, référez-vous au manuel d'instructions.

MINIMUM CLEARANCES TO COMBUSTIBLE MATERIALS		DÉGAGEMENTS MINIMUM AUX MATÉRIAUX COMBUSTIBLES	
Ceiling (1st 6 feet of ductwork including plenum) :	6 in	Plafond (1er 6 pieds de conduit incluant le bonnet) :	150 mm
Ceiling (past 1st 6 feet of ductwork) :	1 in	Plafond (passé les 1ers 6 pieds) :	25 mm
Back Wall :	24 in	Mur arrière :	610 mm
Front Wall :	48 in	Mur avant :	1220 mm
Right Side Wall :	6 in	Mur latéral droit :	150 mm
Left Side Wall :	24 in	Mur latéral gauche :	610 mm
Floor :	0 in	Plancher :	0 mm
Flue Pipe :	18 in	Tuyau à fumée :	457 mm

Made in La Guadeloupe (Qc), Canada
10/04/2017 (# test)

SBI
Fabricant de poêles international
Stove Builder International

Fabriqué à La Guadeloupe (Qc), Canada
10/04/2017 (# test)

27305

MaxCaddy label-2

Intertek

STANDARDS / NORMES D'ESSAI:
Certified to/Certifié selon CAN-CSA B366.1
Conforms to/Conforme à UL 391
Conforms to/Conforme à CSA B-415.1-10
Conforms to/Conforme à ASTM E2515-2011
(JULY / JUILLET 2008)

PERFORMANCE TESTING OF SOLID-FUEL BURNING HEATING APPLIANCE

RENDEMENT D'APPAREIL DE CHAUFFAGE À COMBUSTION SOLIDE

MODEL / MODÈLE :
MAX CADDY

PERFORMANCE TECHNICAL DATA FROM CSA B-415.1-10 /
DONNÉES TECHNIQUES DE PERFORMANCE RELATIVE À LA NORME CSA B-415.1-10

- The stated efficiency is based on the higher heating value of the fuel.
- The minimum and maximum delivered heat output rate are based on the tests performed in determining the average emissions rates.
- The average efficiency is based on the amount of delivered heat.

- Le rendement annoncé est basé sur le pouvoir calorifique supérieur du combustible.
- Les puissances thermiques minimales et maximales sont basées sur les essais réalisés pour la détermination du taux moyen d'émission de particules.
- Le rendement moyen est basé sur la quantité de chaleur transportée.

AVERAGE PARTICULATE EMISSION RATE / TAUX MOYEN D'ÉMISSION DE PARTICULE:	0.753 lb/mmBTU 0.324 g/MJ	MINIMUM DELIVERED HEAT OUTPUT RATE / PUISSANCE THERMIQUE MINIMALE:	16 109 kJ/h
AVERAGE EFFICIENCY / RENDEMENT MOYEN:	64.8%	MAXIMUM DELIVERED HEAT OUTPUT RATE / PUISSANCE THERMIQUE MAXIMALE:	54 578 kJ/h
AVERAGE OVERALL EFFICIENCY / RENDEMENT MOYEN GLOBAL:	78.9%	MINIMUM OVERALL HEAT OUTPUT RATE / PUISSANCE THERMIQUE GLOBALE MINIMALE:	19 243 kJ/h
AVERAGE ELECTRICAL POWER CONSUMPTION / CONSOMATION D'ÉLECTRICITÉ MOYENNE:	0.36 kW/h	MAXIMUM OVERALL HEAT OUTPUT RATE / PUISSANCE THERMIQUE GLOBALE MAXIMALE:	67 069 kJ/h

U.S. ENVIRONMENTAL PROTECTION AGENCY Certified to comply with 2015 particulate emission standards. Not approved for sale after May 15, 2020./AGENCE DE PROTECTION DE L'ENVIRONNEMENT DES É.U. (EPA). Conforme aux normes d'émission de particules de 2015. Ne peut être vendu après le 15 mai 2020.

This wood heater needs periodic inspection and repair for proper operation. Consult the owner's manual for further information./Cet appareil requiert des inspections et réparations périodiques. Consulter le manuel de l'utilisateur pour plus d'information.

It is against US federal regulations to operate this wood heater in a manner inconsistent with the operating instructions in the owner's manual./Opérer cet appareil de chauffage de façon inconsistente par rapport au manuel de l'utilisateur consiste une violation de la loi fédérale (USA).

DANGER: Risk of fire or explosion
- Do not burn garbage, gasoline, drain oil or other flammable liquids.

WARNING: Risk of fire
- Do not operate with flue draft exceeding 0.06" W.C. (15Pa).
- Do not operate with fuel loading or ash removal doors open.
- Do not store fuel or other combustible material within marked installation clearances.
- Inspect and clean flues and chimney regularly.

CAUTION: Hot surfaces
- Keep children away.
- Do not touch during operation.

DANGER: Risque d'incendies ou d'explosion
- Ne pas brûler d'ordures, d'essence, d'huile moteur ou tout autre liquides inflammable.

AVERTISSEMENT: Risque d'incendies
- Ne pas utiliser si le tirage excède 0.06" C.E. (15Pa).
- Ne pas utiliser avec les portes d'accès et/ou de chargement ouverte.
- Ne pas entreposer de combustible ou matériaux combustibles à l'intérieur des dégagements prescrits.
- Inspecter et nettoyer le conduit de raccordement ainsi que la cheminée fréquemment.

TECHNICAL DATA
DONNÉES TECHNIQUES

Blower / Ventilateur	G-10 1/2 HP
Max Output T°/ T° max Sortie	185 °F 85 °C
Ext. Static Pressure/ Pression Statique Ext.	0.2" - 0.5" W.C. 0.2" - 0.5" C.E.
Electrical Rating / Alimentation Electrique	120V, 3.8 AMPS, 60Hz

PROCEDURE TO FOLLOW IN CASE OF RUN-AWAY FIRE
1) Turn down thermostat
2) Keep fuel door closed
3) Close all combustion air controls

EN CAS D'INCENDIE DE CHEMINÉE
1) Baisser le thermostat
2) Maintenir la porte de chargement fermée
3) Fermer tous les dispositifs d'admission d'air

Made in La Guadeloupe (Qc), Canada
10/04/2017 (# test)

Fabriqué à La Guadeloupe (Qc), Canada
10/04/2017 (# test)

SBI
Fabricant de poêles international
Stove Builder International

27306

TESTING INFORMATION

Test Report 101549667MTL-001

Intertek Testing Services NA (Intertek) has conducted testing for Stove Builder International (SBI), on the Max Caddy Solid Fuel Wood Furnace, to evaluate all applicable performance requirements included in CSA B415.1-2010, “Performance testing of solid-fuel burning heating appliances”.

Testing was performed at client's facility by Claude Pelland from Intertek.
Stove Builder International Inc. model Caddy Wood Furnace has been found to be in compliance with the applicable performance requirements of the following criteria:
“CSA B415.1-2011 – Performance Testing of Solid-Fuel-Burning Heating Appliances”.

This standard requires that the weighted emissions rate for indoor wood fired furnaces not exceed 0.40 g/MJ and that no single run produces an emissions rate over 18 g/hr (or 0.20 g/MJ if the burn rate exceeds 8.3 dry Kg/hr).

The unit as tested produced a weighted average emission rate of 0.463 g/MJ (1.078 lbs/mmBTU) and therefore met this limit.

(See Appendices A through H for test data that are part of this report)

In 2016, the report was revised to modify an erranous list of unit names as well as to correct some calculation errors. It also allowed for the creation of the description table presenting the data required by EPA.

SIGNATURE PAGE

Reported By:

Claude Pelland, P.Eng.
Staff Engineer
Intertek Lachine

Reviewed By:

Brian Ziegler
Project Team Leader
Building Products Division

DRAWING INDEX

000-3198245 Test Report 101549667MTL-001
001- Appendix A- Lab Operating Procedure
002- Appendix B- Data and Calculation Forms
002- Appendix B2- Data and Calculation Forms
003- Appendix C- Calibration Documents
0042- Appendix D2
0043- Appendix D3
0044- Appendix D4
0045- Appendix D5
0046- Appendix D6
005- Appendix E- Dry Gas meter Calibration Data
006- Appendix F- Pre Burn Documentation
007- Appendix G- Stack Loss Efficiency Data/results
008- Appendix H- Photographs

000-3198245 Test Report 101549667MTL-001

TEST REPORT

REPORT NUMBER: 3198245MTL-001

REPORT DATE: April 9, 2010

EVALUATION CENTER
Intertek Testing Services NA Ltd.
1829, 32nd Avenue
Lachine, Qc.

RENDERED TO

Stove Builder International Inc.
250, Copenhague
St-Augustin-de-Desmaures, G3A 2H3
Canada

PRODUCT EVALUATED:

Model MAX Caddy and Heatpro wood furnace

Report of Testing Model Max Caddy/Heatpro Solid Fuel Wood Furnace for compliance as an "Affected Facility" with the applicable requirements of the following criteria: CSA B415.1, "Performance testing of solid-fuel-burning heating appliances"

This report is for the exclusive use of Intertek's Client and is provided pursuant to the agreement between Intertek and its Client. Intertek's responsibility and liability are limited to the terms and conditions of the agreement. Intertek assumes no liability to any party, other than to the Client in accordance with the agreement, for any loss, expense or damage occasioned by the use of this report. Only the Client is authorized to copy or distribute this report and then only in its entirety. Any use of the Intertek name or one of its marks for the sale or advertisement of the tested material, product or service must first be approved in writing by Intertek. The observations and test results in this report are relevant only to the sample tested. This report by itself does not imply that the material, product, or service is or has ever been under an Intertek certification program.

000-3198245 Test Report 101549667MTL-001 (page 2 of 17)

TABLE OF CONTENTS

I. INTRODUCTION 3

A. PURPOSE OF TEST 3

B. LABORATORY 3

C. DESCRIPTION OF UNIT 3

D. REPORT ORGANIZATION 4

II. SUMMARY OF TEST RESULTS 4

A. PRETEST INFORMATION 4

B. INFORMATION LOG 4

C. SUMMARY OF OTHER DATA 5O

III. PROCESS DESCRIPTION 9

IV. SAMPLING SYSTEMS 9

V. SAMPLING METHODS 13

A. PARTICULATE SAMPLING 13

VI. QUALITY ASSURANCE 13

A. INSTRUMENT CALIBRATION 13

B. TEST METHOD PROCEDURES 14

VII. Conclusion 15

VII.A RESULTS AND PBSERVATIONS 15

000-3198245 Test Report 101549667MTL-001 (page 3 of 17)

APPENDICES

Laboratory Operating Procedure ..... A

Data and Calculation Forms ..... B

Calibration Documents C

Unit Drawings and Installation Manual ..... D

Dry Gas Meter Calibration Data ..... E

Unit Pre-burn Documentation ..... F

Stack Loss Efficiency data/Results ..... G

Tunnel Cleaning and Test Load Photographs ..... H

I. INTRODUCTION

Intertek Testing Services NA (Intertek) has conducted testing for Stove Builder International (SBI), on the Max Caddy Solid Fuel Wood Furnace, to evaluate all applicable performance requirements included in CSA B415.1-2010, “Performance testing of solid-fuel-burning heating appliances”.

A. PURPOSE OF TEST

The test was conducted to determine if the unit is in accordance CSA B415.1, “Performance testing of solid-fuel-burning heating appliances”. This evaluation was conducted on January 12 – 15, 2010 and February 4 & 5, 2010.

B. LABORATORY

The test on the Max Caddy Solid Fuel Wood Furnace was conducted at the SBI Laboratory located at Quebec, Canada. The laboratory elevation is 275 feet above sea level. The test was conducted by Claude Pelland and John Voorhees.

C. DESCRIPTION OF UNIT

The Max Caddy / Heatpro Solid Fuel Wood Furnace is constructed of carbon steel. The outer dimensions are 57-inches deep, 49-inches high, and 30-inches wide. The unit has a door located on the front with a viewing glass for loading the fuel. Proprietary drawings and manufacturing methods are on file at Intertek in Quebec, Canada.

000-3198245 Test Report 101549667MTL-001 (page 4 of 17)

D. REPORT ORGANIZATION

This report includes summaries of all data necessary to determine compliance with the standard.

II. SUMMARY OF TEST RESULTS

A. PRETEST INFORMATION

The sample was submitted to Intertek directly from the client. The sample was not independently selected for testing. The unit was set up following the manufacturer's instructions without difficulty.

Following assembly, the unit was placed on the test stand and instrumented with thermocouples in the specified locations. Prior to beginning the emissions tests the unit was operated for a minimum of 10 hours at high-to-medium burn rates to break in the stove. The unit was found to be operating satisfactory during this break-in. The 10 plus hours of pre-burning were conducted on January 5, 2010. The fuel used for the break-in process was traditional oak cordwood.

Following the pre-burn break-in process the unit was allowed to cool. The unit's chimney system and laboratory dilution tunnels were cleaned using standard wire brush chimney cleaning Equipment. On January 12, 2010, the unit was set-up for testing.

B. INFORMATION LOG

TEST STANDARD

From January 12 - 15, 2010 and February 4 & 5, 2010, the unit was tested for CSA B415.1, “Performance testing of solid-fuel-burning heating appliances”.

Deviation from Standard Method

Test run 3 was considered an outlier and was replaced by two additional runs in the medium low category (runs 5 and 6). Run 4 did not meet the dual train precision requirement, but it was felt that given the small weighting and degree of deviation, use of the higher emissions value from the two sampling trains would be an acceptable conservative alternative to re-running the test. This report, therefore, reflects this judgment.

No other deviations from the standard were performed, however, only the applicable sections of the standard were used during all testing.

000-3198245 Test Report 101549667MTL-001 (page 5 of 17)

Report No. 3198245MTL-001
Client: Stove Builder International Inc.
Model: MAX Caddy and Heatpro

Report Date: April 9th, 2010
Rev I: September 13, 2016
Rev II: April 7th, 2017
Page 5 of 17

C. SUMMARY OF OTHER DATA

EMISSIONS

Run No.	Test Date	Burn rate	Emission rate	Emission rate	Emission rate	Delivered Efficiency	Delivered Efficiency	Overall Efficiency (1)	Overall Efficiency (1)
		kg/h	g/MJ	lb/mmBTU	g/h	% HHV	% LHV	% HHV	% LHV
1	Jan. 12th, 2010	4.826	0.094	0.218	5.1	56.3	60.7	73.2	78.8
2	Jan. 13th, 2010	1.237	0.404	0.938	6.4	64.8	69.8	79	85.1
3	Jan. 14th, 2010	2.560	0.703	1.634	18	50.5	54.4	74.6	80.3
4	Jan. 15th, 2010	3.418	0.153	0.356	6.1	58.2	62.9	74.2	79.9
5	Feb. 4th, 2010	2.335	0.172	0.399	4.8	60.5	65.5	79.1	85.2
6	Feb. 5th, 2010	2.129	0.176	0.409	4.9	65.6	71.0	79.5	85.7

WEIGHTED AVERAGE CALCULATION –EMISSIONS

Run No.	Burn rate	(E_{SI}) Average Emission Rate	(E) Average Emission Rate	Probability	(K) Weighting Factor	($K*E_{SI}$)	(K*E)
	kg/h	g/MJ	lb/mmBTU	-	-	g/MJ	lb/mmBTU
2	1.237	0.404	0.938	0.5663	0.93752	0.379	0.879
6	2.129	0.176	0.409	0.9375	0.38292	0.067	0.157
5	2.335	0.172	0.399	0.9492	0.05148	0.009	0.021
4	3.418	0.153	0.356	0.9890	0.0478	0.007	0.017
1	4.826	0.094	0.218	0.9970	0.011	0.001	0.002
*Outlier - 3	2.560	0.703	1.634	*	*	*	*
				Totals:	1.43072	0.463	1.076
					Weighted average emission rate:	0.324	0.752

000-3198245 Test Report 101549667MTL-001 (page 6 of 17)

Report No. 3198245MTL-001
Client: Stove Builder International Inc.
Model: MAX Caddy and Heatpro

Report Date: April 9th, 2010
Rev I: September 13, 2016
Rev II: April 7th, 2017
Page 6 of 17

WEIGHTED AVERAGE CALCULATION –EFFICIENCY (HHV)

Run No.	Burn rate	(DE) Delivered Efficiency	(OE) Overall Efficiency	Probability	(K) Weighting Factor	(K*DE)	(K*OE)
	kg/h	% HHV	% HHV	-	-	% HHV	% HHV
2	1.237	64.8	79.0	0.5663	0.93752	60.751	74.064
6	2.129	65.6	79.5	0.9375	0.38292	25.120	30.442
5	2.335	60.5	79.1	0.9492	0.05148	3.115	4.072
4	3.418	58.2	74.2	0.9890	0.0478	2.782	3.547
1	4.826	56.3	73.2	0.9970	0.011	0.619	0.805
*Outlier - 3	2.560	50.5	74.6	*	*	*	*
				Totals:	1.43072	92.387	112.930
					Weighted average efficiency (%):	64.6	78.9

WEIGHTED AVERAGE CALCULATION – CO EMISSIONS

Run No.	Burn rate (kg/h)	Total CO	CO rate	Average CO	Average CO	Probability	(K) Weighting Factor	(K*CO)	(K*CO)	(K*CO rate)	Test duration
	kg/h	g	g/min	g/MJ Output	lb/mmBTU Output	-	-	g/MJ Output	lb/mmBTU Output	g/min	min
2	1.237	2,141	1.91	5.9	13.71	0.5663	0.9375	5.531	12.853	1.79	1,120
6	2.129	1,104	2.25	4.01	9.33	0.9375	0.3829	1.536	3.573	0.86	490
5	2.335	1,189	2.70	4.41	10.25	0.9492	0.0515	0.227	0.528	0.14	440
4	3.418	1,008	3.15	3.75	8.71	0.9890	0.0478	0.179	0.416	0.15	320
1	4.826	845	3.84	3.28	7.62	0.9970	0.0110	0.036	0.084	0.04	220
*Outlier - 3	2.560	1,822	4.34	6.86	15.93	*	*	*	*	*	420
						Total:	1.431	7.509	17.454	2.984	
							Weighted average CO emission rate:	5.249	12.199	2.086	

000-3198245 Test Report 101549667MTL-001 (page 7 of 17)

Report No. 3198245MTL-001
Client: Stove Builder International Inc.
Model: MAX Caddy and Heatpro

Report Date: April 9th, 2010
Rev I: September 13, 2016
Rev II: April 7th, 2017
Page 7 of 17

TEST FACILITY CONDITION

Run No.	Room temperature start	Room temperature end	Barometric pressure start	Barometric pressure end	Air Velocity before	Air Velocity after
	°F	°F	in. Hg.	in. Hg.	ft/min	ft/min
1	85	85	29.97	29.97	0	0
2	84	77	30.06	30.19	0	0
3	82	81	30.18	30.10	0	0
4	86	84	29.80	30.08	0	0
5	80	82	30.24	30.24	0	0
6	81	78	30.19	30.19	0	0

DILUTION TUNNEL FLOW RATE MEASUREMENTS AND SAMPLING DATA (ASTM E2515)

Run No.	Burn time	Velocity	Volumetric Flow rate	Total temperature	Volume sampled		Particulate catch	
					Train 1	Train 2	Train 1	Train 2
	min	ft/s	dscf/min	R	dscf	dscf	mg	mg
1	220	15.41	142.48	659.88	6.65	6.66	4.4	3.5
2	1120	17.03	190.71	547.82	36.04	47.27	21.6	24.8
3	420	17.25	185.52	570.66	12.73	15.25	23.0	21.9
4	320	19.25	192.85	608.54	9.14	10.65	3.9	6.6
5	440	14.56	158.66	565.18	11.05	13.11	5.7	6.5
6	490	14.44	157.85	562.42	12.64	13.51	6.5	7.0

OTHER TEST DATA

Run No.	Category	Burn Rate	Average Delivered output	Average Delivered Output	% Max Output	Average Total Output	Average Total Output
		kg/h	kJ/h	BTU/h	%	kJ/h	BTU/h
1	IV	4.826	53,986	51,203	100.0%	70,241	66,620
2	I	1.237	15,934	15,112	29.5%	19,438	18,436
3	II	2.560	25,678	24,354	47.6%	37,972	36,015
4	III	3.418	39,528	37,490	73.5%	50,437	47,837
5	II	2.335	28,053	26,607	52.2%	36,752	34,857
6	II	2.129	27,763	26,332	51.6%	33,687	31,950

000-3198245 Test Report 101549667MTL-001 (page 8 of 17)

Report No. 3198245MTL-001
Client: Stove Builder International Inc.
Model: MAX Caddy and Heatpro

Report Date: April 9th, 2010
Rev I: September 13, 2016
Rev II: April 7th, 2017
Page 8 of 17

LOWER HEATING VALUE (LHV)

The following efficiency data is not specified by CSA B415.1-2010. However, since tax credits may be available in the US for appliances that achieve specified minimum efficiencies based on the fuel Lower Heating Value, the following results have been calculated from the data obtained in this test program.

Run No.	Burn Rate	(DE) Delivered Efficiency	(OE) Overall Efficiency	Probability	(K) Weighting Factor	(K*DE)	(K*OE)
	Kg/h	% LHV	%LHV	-	-	% LHV	% LHV
2	1.237	69.8	85.1	0.5663	0.93752	65.439	79.783
6	2.129	71.0	85.7	0.9375	0.38292	27.187	32.816
5	2.335	65.5	85.2	0.9492	0.05148	3.372	4.386
4	3.418	62.9	79.9	0.9890	0.04780	3.007	3.819
1	4.826	60.7	78.8	0.9970	0.01100	0.668	0.867
*Outlier - 3	2.560	54.4	80.3	*	*	*	*
				Totals:	1.43072	99.672	121.671
					Weighted average efficiency (%)	69.7	85.0

GENERAL SUMMARY OF RESULTS

Run No.	Burn rate	Change in surface temperature	Initial Draft	Run Time	Average Draft
	kg/h	°F	"H_2O	min	"H_2O
1	4.826	45.14	0.043	220	0.055
2	1.237	62.57	0.035	1120	0.017
3	2.560	61.02	0.060	420	0.032
4	3.418	111.49	0.033	320	0.043
5	2.335	54.66	0.043	440	0.029
6	2.129	58.40	0.035	490	0.030

000-3198245 Test Report 101549667MTL-001 (page 9 of 17)

III. PROCESS DESCRIPTION

III.A TEST SET-UP DESCRIPTON

A standard 6” diameter single wall pipe and insulated chimney system was installed to 15’ above floor level. The unit controls were set to the lowest setting during the test.

III.B AIR SUPPLY SYSTEM

Combustion air enters at front of the firebox through an opening at the top of the firebox. This air is controlled thermostatically. All gases exit through the 6” flue.

IV. SAMPLING SYSTEMS

IV.A. SAMPLING LOCATIONS

Particulate samples are collected from the dilution tunnel at a point 20 feet from the tunnel entrance. The tunnel has two elbows and two mixing baffles in the system ahead of the sampling section. (Similar to that shown in Figure 3.) The sampling section is a continuous 13 foot section of 6 inch diameter pipe straight over its entire length. Tunnel velocity pressure is determined by a standard Pitot tube located 60 inches from the beginning of the sampling section. The dry bulb thermocouple is located six inches downstream from the Pitot tube. Tunnel samplers are located 60 inches downstream of the Pitot tube and 36 inches upstream from the end of this section. (Similar to that shown in Figure 1.)

Stack gas samples are collected from the steel chimney section 8 feet ± 6 inches above the scale platform. (Similar to that shown in Figure 2.)

IV.A-1 DILUTION TUNNEL

000-3198245 Test Report 101549667MTL-001 (page 10 of 17)

Report No. 3198245MTL-001
Client: Stove Builder International Inc.
Model: MAX Caddy and Heatpro

Report Date: April 9th, 2010
Rev I: September 13, 2016
Rev II: April 7th, 2017
Page 10 of 17

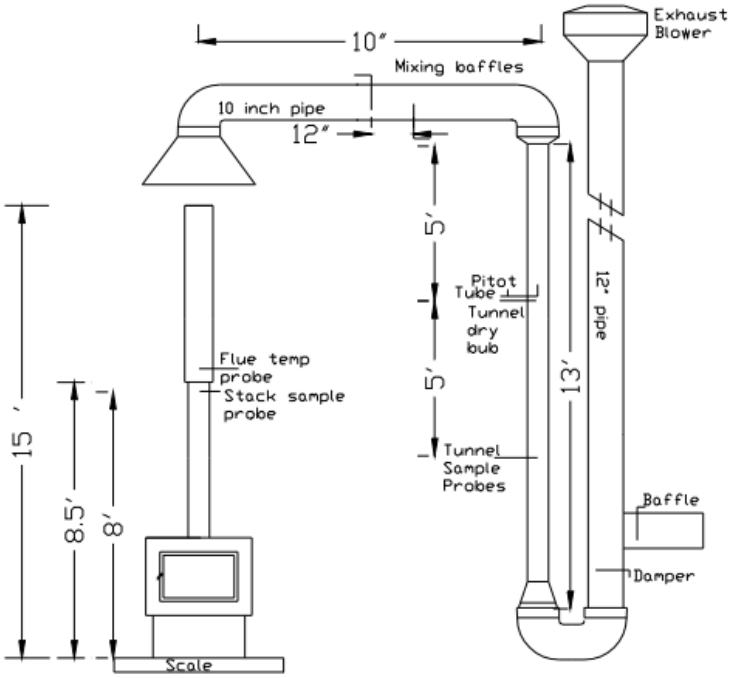

FIGURE 1

000-3198245 Test Report 101549667MTL-001 (page 11 of 17)

Report No. 3198245MTL-001
Client: Stove Builder International Inc.
Model: MAX Caddy and Heatpro

Report Date: April 9th, 2010
Rev I: September 13, 2016
Rev II: April 7th, 2017
Page 11 of 17

IV.B OPERATIONAL DRAWINGS

IV.B.1 STACK GAS SAMPLE TRAIN

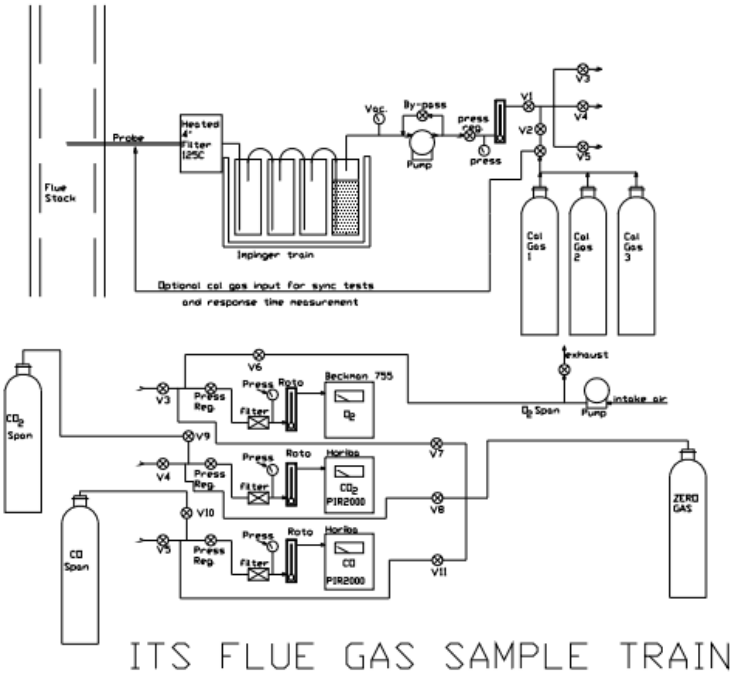

ITS FLUE GAS SAMPLE TRAIN

FIGURE 2

000-3198245 Test Report 101549667MTL-001 (page 12 of 17)

IV.B.2 DILUTION TUNNEL SAMPLE SYSTEMS

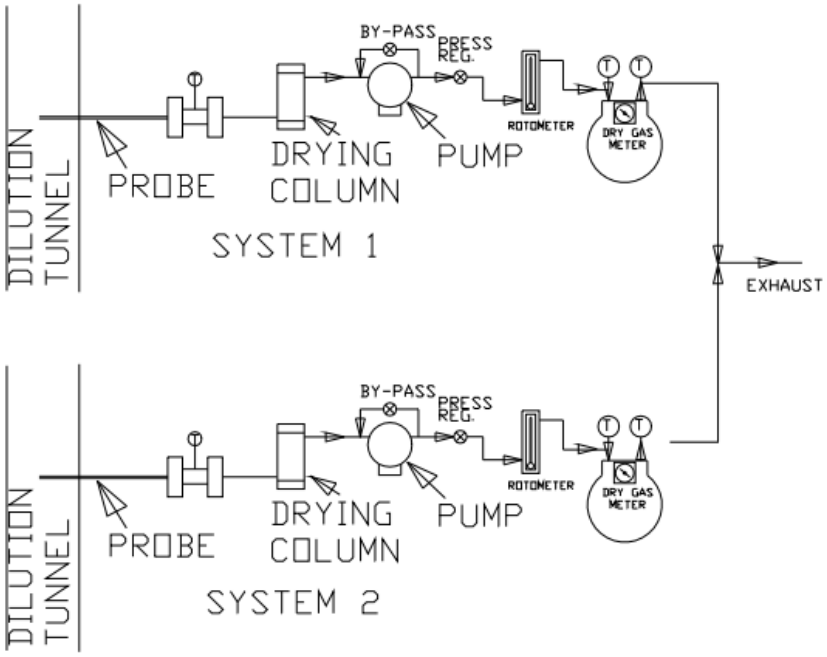

Figure 3

000-3198245 Test Report 101549667MTL-001 (page 13 of 17)

V. SAMPLING METHODS

A. PARTICULATE SAMPLING

Particulates were sampled in strict accordance with ASTM E2515-11. This method uses two identical sampling systems with Gelman A/E 61631 binder free, 47-mm diameter filters. The dryers used in the sample systems are filled with “Drierite” before each test run.

VI. QUALITY ASSURANCE

A. INSTRUMENT CALIBRATION

1. DRY GAS METERS

At the conclusion of each test program the dry gas meters are checked against a standard dry gas meter. Three runs are made on each dry gas meter used during the test program. The average calibration factors obtained are then compared with the six-month calibration factor and, if within 5%, the six-month factor is used to calculate standard volumes. Results of this calibration are contained in Appendix E.

An integral part of the post test calibration procedure is a leak check of the pressure side by plugging the system exhaust and pressurizing the system to 10” W.C. The system is judged to be leak free if it retains the pressure for at least 10 minutes.

The standard dry gas meter is calibrated every 12 months using a Spirometer designed by the EPA Emissions Measurement Branch. The process involves sampling the train operation for 1 cubic foot of volume. With readings made to .001 ft^3, the resolution is 0.1%, giving an accuracy higher than the ±2% required by the standard.

2. STACK SAMPLE ROTOMETER

The stack sample rotameter is checked by running three tests at each flow rate used during the test program. The flow rate is checked by running the rotometer in series with one of the dry gas meters for 10 minutes with the rotometer at a constant setting. The dry gas meter volume measured is then corrected to standard temperature and pressure conditions. The flow rate determined is then used to calculate actual sampled volumes.

000-3198245 Test Report 101549667MTL-001 (page 14 of 17)

3. GAS ANALYZERS

The continuous analyzers are zeroed and spanned before each test with appropriate gases. A mid-scale multi-component calibration gas is then analyzed. At the conclusion of a test, the instruments are checked again with zero, span and calibration gases. The drift in each meter is then calculated and must not exceed 5% of the scale used for the test.

At the conclusion of each unit test program, a five-point calibration check is made. This calibration check must meet accuracy requirements of the applicable standards. Consistent deviations between analyzer readings and calibration gas concentrations are used to correct data before computer processing. Data is also corrected for interferences as prescribed by the instrument manufacturer's instructions.

B. TEST METHOD PROCEDURES

1. LEAK CHECK PROCEDURES

Before and after each test, each sample train is tested for leaks. Leakage rates are measured and must not exceed 0.02 CFM or 4% of the sampling rate. Leak checks are performed checking the entire sampling train, not just the dry gas meters. Pre-test and post-test leak checks are conducted with a vacuum of 5 inches of mercury. Vacuum is monitored during each test and the highest vacuum reached is then used for the post test vacuum value. If leakage limits are not met, the test run is rejected. During these tests no vacuum were observed. Thus, leakage rates reported are expected to be much higher than actual leakage during the tests.

2. TUNNEL VELOCITY/FLOW MEASUREMENT

The tunnel velocity is calculated from a center point Pitot tube signal multiplied by an adjustment factor. This factor is determined by a traverse of the tunnel as prescribed in EPA Method 1. Final tunnel velocities and flow rates are calculated from EPA Method 2, Equation 6.9 and 6.10. (Tunnel cross sectional area is the average from both lines of traverse.)

Pitot tubes are cleaned before each test and leak checks are conducted after each test.

000-3198245 Test Report 101549667MTL-001 (page 15 of 17)

3. **PM SAMPLING PROPORTIONALITY (ASTM E2515-11)**

Proportionality was calculated in accordance with ASTM E2515-11. The data and results are included in Appendix B.

VII. Conclusion

The weighted average emission rate of the appliance is 0.324 g/MJ. The average delivered efficiency is 64.6 (%HHV) and the average total efficiency is 78.9 (%HHV)

Run 3 was an outlier and was replaced by runs 5 & 6, therefore Run 3 was not used to calculate the weighted average emission rate or efficiency.

VII.A RESULTS AND PBSERVATIONS

The Max Caddy Solid fuel wood furnace has been found to be in compliance with the applicable performance requirements of the following criteria CSA B415.1-2010, “Performance testing of solid-Fuel Burning heating appliances”, Clause 41.2.1 c) which limits emissions to a maximum of 0.4 g/Mj. And clause 4.1(a) which limits individual run emissions rates to 15 g/h for burn rates of 1.5 Kg/h of less and 18 g/h for burn rates over 1.5 kg/h.

The SBI Model Max Caddy solid Fuel Wood Furnace is therefore eligible for certification. This report does not automatically imply certification. Products must bear an Intertek authorized certification label in order to demonstrate certification.

000-3198245 Test Report 101549667MTL-001 (page 16 of 17)

Report No. 3198245MTL-001
Client: Stove Builder International Inc.
Model: MAX Caddy and Heatpro

Report Date: April 9th, 2010
Rev I: September 13, 2016
Rev II: April 7th, 2017
Page 16 of 17

INTERTEK TESTING SERVICES NA LTD.

Reported by: Signatures maintained on file
John Voorhees,
Senior Project Engineer

Reviewed by: Signatures maintained on File
Rick Curkeet P.E.
Chief Engineer- Hearth Products

Report updated by:

Claude Pelland, Eng.
Project Engineer

Report Reviewed by:

.
Chief Engineer Hearth Products

000-3198245 Test Report 101549667MTL-001 (page 17 of 17)

Report No. 3198245MTL-001
Client: Stove Builder International Inc.
Model: MAX Caddy and Heatpro

Report Date: April 9th, 2010
Rev I: September 13, 2016
Rev II: April 7th, 2017
Page 17 of 17

REVISION SUMMARY

DATE	SUMMARY
September 13, 2016	Revised discussion to reflect proper model MAX Caddy in lieu of He-2000 Revised data sheet for calculation corrections
April 7, 2017	As per EPA, addition of Average CO table to "SUMMARY OF OTHER DATA" on page 6

001- Appendix A- Lab Operating Procedure

Laboratory Operating Procedure

Appendix A

001- Appendix A- Lab Operating Procedure (page 2 of 7)

Report Number: G102038216 Issued date: April 29, 2015
Client: Stove Builder International inc.

A. GAS ANALYSIS

1. Instruments should be turned on and allowed to warm up for one (1) hour minimum.

2. Calibrate analyzers as follows:

NOTE : Prior to proceeding with calibration, make sure to use NIST tracable calibration gas bottles. Adjust flow meter if necessary at each instrument to required flow value.

a) Using span gas, adjust span control to values specified on calibration gas label.
b) Using nitrogene, adjust zero controls to provide a 0.00 analyzer readout.

c) Repeat a) and b) until no further adjustment is required.
d) Check readout vs. calibration gases (2) labels.

The CO_2 and CO analyzers are "ZEROED" on nitrogen. The O_2 analyzer is spanned on air and set for 20.9%. It is zeroed on nitrogen as well.

3. Check for response time synchronization.

a) With no fire in unit, allow reading to stabilize (O_2 should be 20.93, CO and CO_2 should equal O).
b) Flow the calibration gas in the unit and start stop watch. Note the time required for each unit to reach .90 of the calibration gas bottle value. If all three analyzers reach this value within 15 seconds of each other, synchronization is adequate. If not, contact the laboratory manager. Synchronization is adjusted by internal instrument setting.

4. Set-up sample clean-up and water collection train as follows.

a) Load impingers as follows:
Impinger #1: 100 ml distilled water and 5 ml H_2SO_4
Impinger #2: 100 ml distilled water and 5 ml H_2SO_4
Impinger #3: Empty
Impinger #4: 200 – 300 grams silica gel (dry)

001- Appendix A- Lab Operating Procedure (page 3 of 7)

Report Number: G102038216 Issued date: April 29, 2015
Client: Stove Builder International inc.

b) Place impingers in container and connect with "U TUBES". Grease carefully on bottom half of ball joint so that grease will not get into tubes.
c) Connect filter to first impinger and sample line to last impinger.

e. Leak check system as follows.

1) Plug probe.
2) Turn on sample system.
3) Observe sample flow rotometer and vacuum gauge. If necessary, use vacuum; adjust valve to set vacuum to the maximum inches Hg.
4) If the float in rotometer does not stabilize below 10 on scale, system must be resealed.
5) Repeat leak check procedure until satisfactory results are obtained.

f) Just prior to starting test, fill impinger container with water and ice and record ambiant conditions on data form no. 192-t-9904.

B. Dilution tunnel sample train set-up

1. Filters and holders.

a) Clean probes and filter holder front housings carefully and desiccate for at least 24 hours prior to use.
b) Filters should be numbered and filter and probe combinations labeled prior to use.
c) Weigh desiccated filters and probe-filter units on analytical balance. Record weights data form no. 192-p-9904. Note that probe and front half of front filter are to be weighed as a unit.
d) Carefully assemble filter holder units and connect to sampling systems. Check "DRIERITE" columns for adequate dry absorbent (blue).

2. Leak checking.

a) Each sample system is to be checked for leakage prior to inserting probes in tunnel.

001- Appendix A- Lab Operating Procedure (page 4 of 7)

Report Number: G102038216 Issued date: April 29, 2015
Client: Stove Builder International inc.

b) Plug probes and start samplers, adjust pump bypass valve to produce a vacuum reading of 5 inches Hg. (NOTE: During test, vacuum must not exceed 5 inches unless posttest leak check shows acceptable results.)

c) Allow vacuum indication to stabilize for two (2) minutes, then record time and dry gas (DGM_1) and (DGM_2) meter readings. Wait ten (10) minutes and record dry gas meter readings again (DGM_3, DGM_4). NOTE: If mark, system is leaking too much and all seals should be checked.

d) Calculate leakage rate as follows.

1) System 1: $\frac{(DGM_3 - DGM_1)}{10} = CFM_1$

2) System 2: $\frac{(DGM_4 - DGM_2)}{10} = CFM_2$

If CFM_1 or CFM_2 is greater than .02 CFM, leakage is unacceptable and system must be resealed.

If CFM_1 or CFM_2 is greater than 0.04 X sample rate, leakage is unacceptable. For most tests, the sample rate will be about 0.15 CFM, thus leakage rates in excess of 0.04 X 0.15 = 0.006 CFM are not acceptable.

e) Once leakage check is satisfactory, unplug probe and set flow to appropriate rate for test. This should be done in the minimum amount of time necessary and with the probes in ambient air. Do not insert probes in tunnel until the start of the test run. When flow is established, replug probes to prevent contamination.

001- Appendix A- Lab Operating Procedure (page 5 of 7)

Report Number: G102038216 Issued date: April 29, 2015
Client: Stove Builder International inc.

TEST CONDUCT

A. FUEL LOAD

1. Determine optimum load weight by multiplying firebox volume in cubic feet by 7. This is the load weight on an as-fired basis.
2. Determine piece size to obtain the requested load configuration and meet the test load weight criteria. The load should consist of the following: **TO BE DETERMINED**
3. Weigh out test load and adjust weight by shortening all pieces equally if necessary.
4. Measure and record moisture content of each fuel piece using Delmhorst moisture meter. Determine if fuel load moisture content is in required range. If not, construct new load using wood with required moisture content. All wood in the humidity chamber should be within range. Contact project manager if you cannot find suitable pieces.

B. Unit start-up

1. Before lighting a fire, turn on dilution tunnel and set flow rate to 140 SCFM if burn rate is to be less than 3 kg/hr or to an appropriate rate from table provided in laboratory for higher burn rates. Record readings on data form no. 192-r-9904.
2. Check draft imposed on cold stove with all inlets closed and a draft gauge in the chimney. If draft is greater than 0.005 inches water column, adjust tunnel to stack gap until draft is less than 0.005.
3. Check for ambient airflow around unit with hot wire anomometer. Must be less than 50 ft/min.
4. Check all equipment for proper operation. Analyzers should be on and in sample mode. Computer should be loaded with test program and awaiting test start command.
5. Zero scale and start fire with uncolored newspaper and kindling representing 10 % of test load with the same type of fuel.
6. Once kindling is burning well after 5 minutes, add splitted pieces having a bottom surface around 4 sq. inches and representing 25% of test load weight. Operate at high fire for 15 minutes. Then adjust settings to intended test run levels as per the manufacturer's.
7. Following addition of pretest fuel load (splitted pieces), start computer for data logging.

001- Appendix A- Lab Operating Procedure (page 6 of 7)

Report Number: G102038216 Issued date: April 29, 2015
Client: Stove Builder International inc.

C. Test run

1. When the 15 minutes high fire pre-burn period is completed, the test is to be started as follows:

   a) Insert the sample probes into the tunnel being careful not to hit sides of tunnel with probe tip.
   b) Check tunnel pitot tube for proper position. (Pitot should be carefully cleaned prior to each test.)
   c) Turn on probe sample systems and stack sampler.
   d) Open stove door, rake coals and load stove as follows: **TO BE DETERMINED**
   e) Close door or follow manufacturer's start-up procedures. (Five (5) minutes maximum time before all doors and controls must be set to final positions for duration of test.)
   f) An alarm will sound an audible signal at the (10) minutes intervals. This signal a reading interval. You must record at each interval the following readings on data form no. 192-v-9904:

      1) Rotometer readings.
      2) Tunnel pitot tube reading.
      (Zero regularly between readings)
      3) Dry gas meter readings.
      4) Temperature readings.
      5) Draft reading
      6) Test laod weight
      7) CO, CO_2 and O_2 readings
      8) Observations of any unusual or non-routine events.

   g) During the test, any condition approaching unacceptable limits will be noted. The filter probes and housings are installed in small holders just outside the tunnel. If the filter temperature gets too high, you will have to increase the water flow through the cooling unit until acceptable temperatures are obtained. In between readings, check on other equipment. Be sure dryers and filters are working and monitor impinger train for proper water and ice levels etc.

001- Appendix A- Lab Operating Procedure (page 7 of 7)

Report Number: G102038216 Issued date: April 29, 2015
Client: Stove Builder International inc.

h) When the fuel charge is consumed, it will signal end of test and shut down the sampling systems. When this occurs, remove filter holder and probes from tunnel and impingers from sample line.

III. POST TEST PROCEDURES

SAMPLE RECOVERY – FILTER TRAINS

1. Carefully clean outside of probes and filter housings with alcohol.
2. Disassemble filter holder and transfer filters to clean petri dish. Scrape gasket with scalpel and collect any loose material on filters.
3. Place probe and front half of first filter holders (still assembled) and filters in desiccator. Allow 24-hour desiccation before weighing.
4. Weigh probe filter holder units and filters at two (2) hour intervals until weight change between weighings is less than 0.5 mg. Record all weights taken on data form no. 192-p-9904.

Calculation of results

The computer program carries out all final calculations. When run, it will ask for data from forms used during the test. Enter data as called for.

Other tests

Fuel samples for each run should be tested for heating value and moisture content by ASTM D3286 and D4442 methods respectively.

GENERAL

This guide cannot cover every possible contingency, which may develop during a particular test program. Many questions, which may arise, can be answered by a complete understanding of the test standards and their intent. When in doubt on any detail, check with the laboratory manager and be sure you understand the procedures involved.

It is critical that all spaces on the data forms be properly filled in. Each test must be represented by a complete record of what was done and when.

002- Appendix B- Data and Calculation Forms

Data and Calculation Forms

Appendix B

002- Appendix B- Data and Calculation Forms (page 2 of 39)

Intertek

E&E FUEL LOAD DATA SHEET

Manufacturer: SBI
Model: 3198245/20712-00001
Run #:
Test Date: 2010-01-15

Control#: 3198245/20712-0000121
Tech: C. Paré

Test Load Weight:

	Lower	Ideal	Upper
Firebox Volume: 4.5 cu. ft	40.50	45.00	49.50

Load Volume: 0.0000 cu. ft

Loading Density: 10.798 lbs./ft3

Number of Spaces:
Spacer weight:

Load Density (wet): #DIV/0! lbs./ft3
Dry Wood Density: #DIV/0!

Piece Size: Thick	x Wide	x Length	Weight lbs	Meter Moisture Content Dry Uncorrected %	Ave. MC x Weight	Volume Cubic Inches
			6.60	23.10	25.90	172.26	0.00
			8.55	20.10	17.10	172.43	0.00
			10.16	19.00	17.80	198.12	0.00
			8.00	19.70	19.70	167.47	0.00
			8.15	19.00	22.10	159.20	0.00
			7.13	19.40	21.60	146.64	0.00
					SUM MCxWT	1016.108667	

Test Load Weight: 48.59 lbs.

Dry Weight: 18.23 kg.

Average Moisture Content: %

Dry: 20.91

20.91
Must be 18-28

Wet: 17.30
must be 15-25

002- Appendix B- Data and Calculation Forms (page 3 of 39)

15.01.2010	15.01.2010	10:52:27												
15.01.2010		10:52:27	COM1: SBI_1: U230015606	Measure	C1: CO	1 %	C2: CO2	15.1 %	C3: CO	900 vpm	C4: O2	4.28 %		
15.01.2010		11:02:27	COM1: SBI_1: U230015606	Measure	C1: CO	0.7 %	C2: CO2	14.7 %	C3: CO	788 vpm	C4: O2	4.76 %		
15.01.2010		11:12:27	COM1: SBI_1: U230015606	Measure	C1: CO	0.3 %	C2: CO2	14.2 %	C3: CO	788 vpm	C4: O2	6.24 %		
15.01.2010		11:22:27	COM1: SBI_1: U230015606	Measure	C1: CO	0.2 %	C2: CO2	11.8 %	C3: CO	518 vpm	C4: O2	9.05 %		
15.01.2010		11:32:27	COM1: SBI_1: U230015606	Measure	C1: CO	0.2 %	C2: CO2	11 %	C3: CO	438 vpm	C4: O2	9.85 %		
15.01.2010		11:42:27	COM1: SBI_1: U230015606	Measure	C1: CO	0.2 %	C2: CO2	10.5 %	C3: CO	440 vpm	C4: O2	10.5 %		
15.01.2010		11:52:27	COM1: SBI_1: U230015606	Measure	C1: CO	0.2 %	C2: CO2	9.69 %	C3: CO	405 vpm	C4: O2	10.9 %		
15.01.2010		12:02:27	COM1: SBI_1: U230015606	Measure	C1: CO	0.2 %	C2: CO2	9.09 %	C3: CO	288 vpm	C4: O2	11.3 %		
15.01.2010		12:12:27	COM1: SBI_1: U230015606	Measure	C1: CO	0.2 %	C2: CO2	7.56 %	C3: CO	565 vpm	C4: O2	12.6 %		
15.01.2010		12:22:27	COM1: SBI_1: U230015606	Measure	C1: CO	0.2 %	C2: CO2	7.42 %	C3: CO	547 vpm	C4: O2	12.6 %		
15.01.2010		12:32:27	COM1: SBI_1: U230015606	Measure	C1: CO	0.2 %	C2: CO2	6.83 %	C3: CO	676 vpm	C4: O2	12.8 %		
15.01.2010		12:42:27	COM1: SBI_1: U230015606	Measure	C1: CO	0.2 %	C2: CO2	6.26 %	C3: CO	788 vpm	C4: O2	13.4 %		
15.01.2010		12:52:27	COM1: SBI_1: U230015606	Measure	C1: CO	0.3 %	C2: CO2	4.98 %	C3: CO	788 vpm	C4: O2	14.7 %		
15.01.2010		13:02:27	COM1: SBI_1: U230015606	Measure	C1: CO	0.5 %	C2: CO2	4.1 %	C3: CO	788 vpm	C4: O2	15.3 %		
15.01.2010		13:12:27	COM1: SBI_1: U230015606	Measure	C1: CO	0.5 %	C2: CO2	3.82 %	C3: CO	788 vpm	C4: O2	15.8 %		
15.01.2010		13:22:27	COM1: SBI_1: U230015606	Measure	C1: CO	0.4 %	C2: CO2	3.84 %	C3: CO	788 vpm	C4: O2	15.9 %		
15.01.2010		13:32:27	COM1: SBI_1: U230015606	Measure	C1: CO	0.4 %	C2: CO2	3.77 %	C3: CO	788 vpm	C4: O2	15.8 %		
15.01.2010		13:42:27	COM1: SBI_1: U230015606	Measure	C1: CO	0.4 %	C2: CO2	3.42 %	C3: CO	788 vpm	C4: O2	16.2 %		
15.01.2010		13:52:27	COM1: SBI_1: U230015606	Measure	C1: CO	0.5 %	C2: CO2	3.15 %	C3: CO	788 vpm	C4: O2	16.5 %		
15.01.2010		14:02:27	COM1: SBI_1: U230015606	Measure	C1: CO	0.4 %	C2: CO2	3.21 %	C3: CO	788 vpm	C4: O2	16.5 %		
15.01.2010		14:12:27	COM1: SBI_1: U230015606	Measure	C1: CO	0.5 %	C2: CO2	3.22 %	C3: CO	788 vpm	C4: O2	16.5 %		
15.01.2010		14:22:27	COM1: SBI_1: U230015606	Measure	C1: CO	0.4 %	C2: CO2	3.28 %	C3: CO	788 vpm	C4: O2	16.5 %		
15.01.2010		14:32:27	COM1: SBI_1: U230015606	Measure	C1: CO	0.4 %	C2: CO2	3.05 %	C3: CO	788 vpm	C4: O2	16.8 %		
15.01.2010		14:42:27	COM1: SBI_1: U230015606	Measure	C1: CO	0.4 %	C2: CO2	2.59 %	C3: CO	788 vpm	C4: O2	17.2 %		
15.01.2010		14:52:27	COM1: SBI_1: U230015606	Measure	C1: CO	0.4 %	C2: CO2	2.39 %	C3: CO	788 vpm	C4: O2	17.5 %		
15.01.2010		15:02:27	COM1: SBI_1: U230015606	Measure	C1: CO	0.4 %	C2: CO2	2.29 %	C3: CO	788 vpm	C4: O2	17.6 %		
15.01.2010		15:12:27	COM1: SBI_1: U230015606	Measure	C1: CO	0.4 %	C2: CO2	2.24 %	C3: CO	788 vpm	C4: O2	17.7 %		
15.01.2010		15:22:27	COM1: SBI_1: U230015606	Measure	C1: CO	0.4 %	C2: CO2	2.1 %	C3: CO	788 vpm	C4: O2	17.8 %		
15.01.2010		15:32:27	COM1: SBI_1: U230015606	Measure	C1: CO	0.4 %	C2: CO2	2.05 %	C3: CO	788 vpm	C4: O2	17.9 %		
15.01.2010		15:42:27	COM1: SBI_1: U230015606	Measure	C1: CO	0.4 %	C2: CO2	2.02 %	C3: CO	788 vpm	C4: O2	17.9 %		
15.01.2010		15:52:27	COM1: SBI_1: U230015606	Measure	C1: CO	0.4 %	C2: CO2	2 %	C3: CO	788 vpm	C4: O2	17.9 %		
15.01.2010		16:02:27	COM1: SBI_1: U230015606	Measure	C1: CO	0.3 %	C2: CO2	1.96 %	C3: CO	788 vpm	C4: O2	18.1 %		
15.01.2010	15.01.2010	16:04:50												

002- Appendix B- Data and Calculation Forms (page 4 of 39)

Données brutes du Multiscan

DATE: 12-01-10 **Test :** 4

Mean	320.0	227.0	247.2	260.9	288.1	298.8	85.1	150.0	79.5	79.5	-214.9	80.1	80.1	-366.0	114.1	83.3		
MAXIMUM	618.4	261.1	294.6	316.6	388.2	475.7	87.3	252.7	82.6	81.9	84.6	82.6	82.2	83.1	142.7	86.2		
MINIMUM	157.8	171.3	172.2	191.5	249.6	184.6	83.3	105.4	76.3	75.7	-5866.1	75.9	75.9	-5866.1	94.8	80.8		
Time(min)	Top	Back	R.Side	L.Side	Bottom	Flue	Ambiant	Tunnel	DGM 1 in	DGM 1 out	Filter #1	DGM 2 in	DGM 2 out	Filter #2	Pitot	Air Return	Average	
	(°F)	(°F)	(°F)	(°F)	(°F)	(°F)	(°F)	(°F)	(°F)	(°F)	(°F)	(°F)	(°F)	(°F)	(°F)	(°F)		
	1	2	3	4	5	6	7	8	9	10	11	12	13	14	15	16		
0	446.72	202.28	252.68	282.74	257.72	400.1	84.92	191.48	76.28	75.74	######	75.92	75.92	######	124.7	81.86	288.4	
10	420.26	216.68	264.74	290.12	283.82	321.62	84.56	142.7	77.0	76.64	######	76.64	76.64	######	122.72	80.96	295.1	
20	422.42	226.76	271.04	296.78	302.18	337.28	83.66	162.32	77.54	77.18	80.24	77.36	77.36	######	120.74	81.86	303.8	
30	417.74	238.1	276.98	308.12	300.74	335.12	84.02	161.24	78.08	78.08	82.22	77.72	78.08	79.7	121.46	82.76	308.3	
40	409.82	250.88	286.16	315.5	350.6	284.18	84.2	136.58	78.62	78.26	83.12	78.26	78.26	80.24	120.92	81.86	322.6	
50	358.52	261.14	294.62	316.58	366.98	309.56	85.28	146.48	78.44	78.26	83.48	78.44	78.62	80.6	119.12	81.86	319.6	
60	308.48	260.06	288.14	304.88	377.6	298.76	84.2	157.28	78.08	78.08	83.84	78.44	78.62	80.42	114.8	82.22	307.8	
70	284.36	255.92	281.3	295.52	382.82	277.16	86.18	148.28	78.62	78.44	83.84	78.8	78.8	80.78	112.64	82.76	300.0	Start
80	522.14	241.52	272.48	280.94	388.22	452.66	84.2	238.1	78.44	78.62	83.3	78.8	78.98	80.96	135.5	84.38	341.1	
90	618.44	240.8	266.72	266.72	377.42	475.7	84.92	252.68	78.62	78.62	84.38	79.16	79.16	81.32	142.7	84.2	354.0	
100	586.22	241.34	269.96	265.1	359.42	468.86	85.28	248.54	78.8	78.8	84.56	79.52	79.16	80.06	141.62	86.0	344.4	
110	516.92	245.12	275.18	266.54	339.8	437.36	86.18	220.82	78.8	78.8	84.02	79.52	79.52	79.34	136.4	84.92	328.7	
120	481.64	245.84	279.14	266.18	322.16	423.5	86.54	206.6	78.98	78.98	84.56	79.52	79.7	79.52	133.52	86.18	319.0	
130	470.3	246.38	282.74	266.9	307.22	414.86	85.28	198.14	78.98	79.16	84.02	80.06	79.88	79.16	131.0	84.92	314.7	
140	453.02	248.72	287.24	270.68	295.34	400.1	85.64	185.54	79.52	79.52	82.58	80.42	80.24	77.72	129.2	86.0	311.0	
150	431.06	249.8	289.94	275.54	286.16	387.14	86.54	180.5	79.7	79.7	82.4	80.6	80.6	77.9	127.04	85.46	306.5	
160	411.62	256.1	290.66	278.24	279.5	356.0	85.1	167.0	79.16	79.52	82.76	80.42	80.42	78.44	122.0	85.46	303.2	
170	386.06	258.08	291.2	279.5	274.28	348.44	85.28	163.04	79.7	79.88	82.4	80.6	80.6	78.44	121.46	84.38	297.8	
180	365.72	258.8	290.12	280.58	270.68	335.66	86.0	157.82	79.7	79.88	82.04	80.78	80.6	76.28	119.84	84.02	293.2	
190	338.9	257.0	285.98	279.86	267.8	320.9	84.38	150.62	79.16	79.52	82.4	80.24	80.42	77.9	117.5	84.02	285.9	
200	306.14	254.3	277.16	275.9	265.1	295.88	84.92	141.62	79.34	79.52	82.76	80.24	80.42	78.98	113.9	83.66	275.7	
210	275.54	248.36	264.02	269.06	262.58	273.92	84.74	133.88	79.16	79.34	81.86	80.24	80.42	79.34	110.66	84.02	263.9	
220	250.88	240.44	251.78	258.26	260.6	260.96	86.72	129.56	79.52	79.7	81.14	80.42	80.42	78.8	107.96	82.76	252.4	
230	241.34	232.7	240.98	249.26	258.8	260.24	85.1	129.2	79.52	79.7	80.06	80.42	80.6	78.44	106.88	83.12	244.6	
240	236.48	227.3	234.5	247.1	257.36	259.7	85.46	129.02	79.34	79.7	80.6	80.42	80.6	77.72	106.52	83.84	240.5	
250	228.56	223.16	229.82	248.0	256.82	250.52	85.1	125.78	79.34	79.52	80.42	80.42	80.6	77.9	105.26	83.12	237.3	
260	214.88	219.92	224.6	247.46	257.0	236.84	84.74	122.0	79.16	79.52	79.7	80.42	80.6	78.08	103.64	83.3	232.8	
270	210.02	215.6	219.74	247.1	257.0	235.22	85.28	120.74	79.16	79.52	79.16	80.42	80.42	78.8	102.92	82.94	229.9	
280	205.52	212.0	216.68	249.44	257.0	234.86	85.28	120.56	79.34	79.52	79.16	80.6	80.6	79.7	102.74	82.94	228.1	

DROLET POÊLES FOYERS
Fichier: Cert_B415_2010-01-15
Onglet: Sheet1

page 1 de 1

imprimé le: 2016-09-06

002- Appendix B- Data and Calculation Forms (page 5 of 39)

Données brutes du Multiscan

Mean	320.0	227.0	247.2	260.9	288.1	298.8	85.1	150.0	79.5	79.5	-214.9	80.1	80.1	-366.0	114.1	83.3		
MAXIMUM	618.4	261.1	294.6	316.6	388.2	475.7	87.3	252.7	82.6	81.9	84.6	82.6	82.2	83.1	142.7	86.2		
MINIMUM	157.8	171.3	172.2	191.5	249.6	184.6	83.3	105.4	76.3	75.7	-5866.1	75.9	75.9	-5866.1	94.8	80.8		
Time(min)	Top	Back	R.Side	L.Side	Bottom	Flue	Ambiant	Tunnel	DGM 1 in	DGM 1 out	Filter #1	DGM 2 in	DGM 2 out	Filter #2	Pitot	Air Return	Average	
	(°F)	(°F)	(°F)	(°F)	(°F)	(°F)	(°F)	(°F)	(°F)	(°F)	(°F)	(°F)	(°F)	(°F)	(°F)	(°F)		
290	206.42	209.66	213.8	252.14	257.0	234.86	84.92	120.74	79.16	79.52	80.24	80.24	80.42	80.42	102.56	82.58	227.8	
300	203.72	206.78	211.46	253.76	257.36	229.82	86.54	119.12	80.06	79.88	82.04	80.6	80.6	80.96	102.56	83.48	226.6	
310	198.86	204.08	208.58	251.96	257.54	221.18	87.26	116.78	82.04	81.5	83.84	82.04	81.68	82.22	102.38	84.2	224.2	
320	190.94	200.48	204.08	242.6	257.9	213.62	85.64	114.62	82.04	81.5	84.38	82.22	81.86	82.94	100.76	83.12	219.2	
330	184.1	196.7	199.4	231.44	257.0	207.5	86.36	112.64	82.58	81.86	84.38	82.58	82.22	83.12	100.22	84.38	213.7	
340	175.82	192.2	193.82	221.36	256.1	203.0	85.28	111.74	82.22	81.86	84.56	82.4	82.22	83.12	98.78	82.58	207.9	
350	171.68	187.7	188.6	212.9	254.66	196.88	84.56	109.76	81.68	81.68	84.02	82.04	82.04	82.22	97.7	81.5	203.1	
360	166.46	182.84	183.56	205.52	253.22	192.92	83.3	108.14	81.14	81.32	83.48	81.68	81.68	81.86	96.44	81.32	198.3	
370	163.4	178.52	179.24	199.58	251.6	189.14	83.66	106.7	80.96	81.14	82.94	81.5	81.5	81.32	95.72	81.14	194.5	
380	160.88	175.1	175.28	194.9	250.52	186.98	83.48	105.98	80.78	80.96	82.76	81.32	81.14	81.14	95.18	80.78	191.3	
390	157.82	171.32	172.22	191.48	249.62	184.64	83.66	105.44	80.42	80.78	82.58	80.96	80.96	80.78	94.82	80.96	188.5	
																	#DIV/0!	
																	#DIV/0!	
																	#DIV/0!	
																	#DIV/0!	
																	#DIV/0!	
																	#DIV/0!	
																	#DIV/0!	
																	#DIV/0!	
																	#DIV/0!	
																	#DIV/0!	
																	#DIV/0!	
																	#DIV/0!	
																	#DIV/0!	
																	#DIV/0!	
																	#DIV/0!	
																	#DIV/0!	
																	#DIV/0!	
																	#DIV/0!	
																	#DIV/0!	
																	#DIV/0!	
																	#DIV/0!	
																	#DIV/0!	
																	#DIV/0!	
																	#DIV/0!	
																	#DIV/0!	
																	#DIV/0!	
																	#DIV/0!	
																	#DIV/0!	

DROLET POÊLES FOYERS
Fichier: Cert_B415_2010-01-15
Onglet: Sheet1

page 1 de 1

imprimé le: 2016-09-06

002- Appendix B- Data and Calculation Forms (page 6 of 39)

Intertek

E&E Boiler Tunnel Traverse Worksheet

Static Pressure: 0.095

Barometer: 29.8

	TUNNEL VELOCITY	TUNNEL TEMP	SQUARE ROOT
A CENTER	0.040	210.2	0.2000
B CENTER	0.040	210.2	0.2000
A1	0.035	210.8	0.1871
A2	0.043	211.2	0.2074
A3	0.035	211	0.1871
A4	0.030	211.4	0.1732
B1	0.035	210.8	0.1871
B2	0.043	211.2	0.2074
B3	0.035	211	0.1871
B4	0.030	211.4	0.1732
AVERAGE		210.92	0.1909

PITOT CONSTANT= 0.9547

002- Appendix B- Data and Calculation Forms (page 7 of 39)

Intertek

E&E FUEL LOAD DATA SHEET

Manufacturer: SBI
Model: MAX Caddy
Run #: 5
Test Date: 02-04-2010

Control#: 3198245/20712-0000121
Tech: C. Paré

Test Load Weight:

	Lower	Ideal	Upper
	40.50	45.00	49.50

Firebox Volume: 4.5 cu. ft

Load Volume: 0.0000 cu. ft

Loading Density: 10.138 lbs./ft3

Number of Spaces:

Spacer weight:

Load Density (wet): #DIV/0! lbs./ft3

Dry Wood Density: #DIV/0!

Piece Size: Thick	x Wide	x Length	Weight lbs	Meter Moisture Content Dry Uncorrected %	Ave. MC x Weight	Volume Cubic Inches
			7.28	18.20	16.50	24.50	19.73	0.00
			7.48	20.50	24.00	19.20	21.23	0.00
			7.37	21.70	18.80	20.70	20.40	0.00
			7.65	28.40	25.10	25.10	26.20	0.00
			8.56	17.60	17.60	19.70	18.30	0.00
			7.28	20.10	18.60	19.20	19.30	0.00
						SUM MCxWT	20.86	

Test Load Weight: 45.62 lbs.

Dry Weight: 17.12 kg.

Wet: 17.26 must be 15-25

Average Moisture Content: %

Dry: 20.86

20.86 Must be 18-28

002- Appendix B- Data and Calculation Forms (page 8 of 39)

04.02.2010	04.02.2010	11:34:10											
04.02.2010	11:34:10	COM1: SBI_1: U230015606	Measure	C1: CO	1.2 %	C2: CO2	11.1 %	C3: CO	900 vpm	C4: O2	4.9 %		
04.02.2010	11:44:10	COM1: SBI_1: U230015606	Measure	C1: CO	0.5 %	C2: CO2	10.4 %	C3: CO	788 vpm	C4: O2	9.89 %		
04.02.2010	11:54:10	COM1: SBI_1: U230015606	Measure	C1: CO	0.6 %	C2: CO2	9.78 %	C3: CO	788 vpm	C4: O2	10.9 %		
04.02.2010	12:04:10	COM1: SBI_1: U230015606	Measure	C1: CO	0.5 %	C2: CO2	10 %	C3: CO	788 vpm	C4: O2	9.9 %		
04.02.2010	12:14:10	COM1: SBI_1: U230015606	Measure	C1: CO	0.5 %	C2: CO2	9.88 %	C3: CO	788 vpm	C4: O2	10.1 %		
04.02.2010	12:24:10	COM1: SBI_1: U230015606	Measure	C1: CO	0.5 %	C2: CO2	9.52 %	C3: CO	788 vpm	C4: O2	10.5 %		
04.02.2010	12:34:10	COM1: SBI_1: U230015606	Measure	C1: CO	0.4 %	C2: CO2	9.82 %	C3: CO	788 vpm	C4: O2	10.3 %		
04.02.2010	12:44:10	COM1: SBI_1: U230015606	Measure	C1: CO	0.3 %	C2: CO2	9.86 %	C3: CO	788 vpm	C4: O2	10.4 %		
04.02.2010	12:54:10	COM1: SBI_1: U230015606	Measure	C1: CO	0.2 %	C2: CO2	9.22 %	C3: CO	788 vpm	C4: O2	11 %		
04.02.2010	13:04:10	COM1: SBI_1: U230015606	Measure	C1: CO	0.2 %	C2: CO2	8.71 %	C3: CO	788 vpm	C4: O2	11.7 %		
04.02.2010	13:14:10	COM1: SBI_1: U230015606	Measure	C1: CO	0.2 %	C2: CO2	8.76 %	C3: CO	788 vpm	C4: O2	11.5 %		
04.02.2010	13:24:10	COM1: SBI_1: U230015606	Measure	C1: CO	0.3 %	C2: CO2	8.84 %	C3: CO	788 vpm	C4: O2	11.5 %		
04.02.2010	13:34:10	COM1: SBI_1: U230015606	Measure	C1: CO	0.3 %	C2: CO2	8.8 %	C3: CO	788 vpm	C4: O2	11.2 %		
04.02.2010	13:44:10	COM1: SBI_1: U230015606	Measure	C1: CO	0.2 %	C2: CO2	8.45 %	C3: CO	788 vpm	C4: O2	11.6 %		
04.02.2010	13:54:10	COM1: SBI_1: U230015606	Measure	C1: CO	0.2 %	C2: CO2	7.92 %	C3: CO	788 vpm	C4: O2	11.8 %		
04.02.2010	14:04:10	COM1: SBI_1: U230015606	Measure	C1: CO	0.5 %	C2: CO2	6.17 %	C3: CO	788 vpm	C4: O2	13.4 %		
04.02.2010	14:14:10	COM1: SBI_1: U230015606	Measure	C1: CO	0.8 %	C2: CO2	5.68 %	C3: CO	788 vpm	C4: O2	13.8 %		
04.02.2010	14:24:10	COM1: SBI_1: U230015606	Measure	C1: CO	0.3 %	C2: CO2	7.7 %	C3: CO	788 vpm	C4: O2	11.9 %		
04.02.2010	14:34:10	COM1: SBI_1: U230015606	Measure	C1: CO	0.3 %	C2: CO2	6.9 %	C3: CO	788 vpm	C4: O2	12.8 %		
04.02.2010	14:44:10	COM1: SBI_1: U230015606	Measure	C1: CO	0.2 %	C2: CO2	6.39 %	C3: CO	788 vpm	C4: O2	12.9 %		
04.02.2010	14:54:10	COM1: SBI_1: U230015606	Measure	C1: CO	0.7 %	C2: CO2	4.13 %	C3: CO	788 vpm	C4: O2	14.8 %		
04.02.2010	15:04:10	COM1: SBI_1: U230015606	Measure	C1: CO	0.4 %	C2: CO2	4.04 %	C3: CO	788 vpm	C4: O2	15.1 %		
04.02.2010	15:14:10	COM1: SBI_1: U230015606	Measure	C1: CO	0.4 %	C2: CO2	3.86 %	C3: CO	788 vpm	C4: O2	15.4 %		
04.02.2010	15:24:10	COM1: SBI_1: U230015606	Measure	C1: CO	0.5 %	C2: CO2	3.77 %	C3: CO	788 vpm	C4: O2	15.6 %		
04.02.2010	15:34:10	COM1: SBI_1: U230015606	Measure	C1: CO	0.5 %	C2: CO2	3.4 %	C3: CO	788 vpm	C4: O2	15.9 %		
04.02.2010	15:44:10	COM1: SBI_1: U230015606	Measure	C1: CO	0.5 %	C2: CO2	3.5 %	C3: CO	788 vpm	C4: O2	15.9 %		
04.02.2010	15:54:10	COM1: SBI_1: U230015606	Measure	C1: CO	0.5 %	C2: CO2	3.4 %	C3: CO	788 vpm	C4: O2	16 %		
04.02.2010	16:04:10	COM1: SBI_1: U230015606	Measure	C1: CO	0.5 %	C2: CO2	3.16 %	C3: CO	788 vpm	C4: O2	16.1 %		
04.02.2010	16:14:10	COM1: SBI_1: U230015606	Measure	C1: CO	0.5 %	C2: CO2	3.03 %	C3: CO	788 vpm	C4: O2	16.3 %		
04.02.2010	16:24:10	COM1: SBI_1: U230015606	Measure	C1: CO	0.4 %	C2: CO2	3.16 %	C3: CO	788 vpm	C4: O2	16.2 %		
04.02.2010	16:34:10	COM1: SBI_1: U230015606	Measure	C1: CO	0.3 %	C2: CO2	3.14 %	C3: CO	788 vpm	C4: O2	16.3 %		
04.02.2010	16:44:10	COM1: SBI_1: U230015606	Measure	C1: CO	0.3 %	C2: CO2	3.29 %	C3: CO	788 vpm	C4: O2	16.4 %		
04.02.2010	16:54:10	COM1: SBI_1: U230015606	Measure	C1: CO	0.3 %	C2: CO2	3.37 %	C3: CO	788 vpm	C4: O2	16.3 %		

002- Appendix B- Data and Calculation Forms (page 9 of 39)

04.02.2010	17:04:10	COM1: SBI_1: U230015606	Measure	C1: CO	0.3 %	C2: CO2	3.36 %	C3: CO	788 vpm	C4: O2	16.4 %			
04.02.2010	17:14:10	COM1: SBI_1: U230015606	Measure	C1: CO	0.3 %	C2: CO2	3.28 %	C3: CO	788 vpm	C4: O2	16.6 %			
04.02.2010	17:24:10	COM1: SBI_1: U230015606	Measure	C1: CO	0.3 %	C2: CO2	3.12 %	C3: CO	788 vpm	C4: O2	16.6 %			
04.02.2010	17:34:10	COM1: SBI_1: U230015606	Measure	C1: CO	0.5 %	C2: CO2	3.28 %	C3: CO	788 vpm	C4: O2	16.4 %			
04.02.2010	17:44:10	COM1: SBI_1: U230015606	Measure	C1: CO	0.5 %	C2: CO2	3.22 %	C3: CO	788 vpm	C4: O2	16.5 %			
04.02.2010	17:54:10	COM1: SBI_1: U230015606	Measure	C1: CO	0.4 %	C2: CO2	3.23 %	C3: CO	788 vpm	C4: O2	16.7 %			
04.02.2010	18:04:10	COM1: SBI_1: U230015606	Measure	C1: CO	0.4 %	C2: CO2	3.2 %	C3: CO	788 vpm	C4: O2	16.8 %			
04.02.2010	18:14:10	COM1: SBI_1: U230015606	Measure	C1: CO	0.5 %	C2: CO2	3.61 %	C3: CO	788 vpm	C4: O2	16.1 %			
04.02.2010	18:24:10	COM1: SBI_1: U230015606	Measure	C1: CO	0.5 %	C2: CO2	3.55 %	C3: CO	788 vpm	C4: O2	16.1 %			
04.02.2010	18:34:10	COM1: SBI_1: U230015606	Measure	C1: CO	0.5 %	C2: CO2	3.56 %	C3: CO	788 vpm	C4: O2	16.1 %			
04.02.2010	18:44:10	COM1: SBI_1: U230015606	Measure	C1: CO	0.5 %	C2: CO2	3.48 %	C3: CO	788 vpm	C4: O2	16.1 %			
04.02.2010	18:54:10	COM1: SBI_1: U230015606	Measure	C1: CO	0.5 %	C2: CO2	3.42 %	C3: CO	788 vpm	C4: O2	16.3 %			
04.02.2010	19:04:10	COM1: SBI_1: U230015606	Measure	C1: CO	0.5 %	C2: CO2	3.04 %	C3: CO	788 vpm	C4: O2	16.6 %			
04.02.2010	19:14:10	COM1: SBI_1: U230015606	Measure	C1: CO	0.5 %	C2: CO2	2.94 %	C3: CO	788 vpm	C4: O2	16.8 %			
04.02.2010	04.02.2010	19:43:31												

002- Appendix B- Data and Calculation Forms (page 10 of 39)

Données brutes du Multiscan

DATE: 04-02-10 **Test :** 5

	Top	Back	R.Side	L.Side	Bottom	Flue	Ambiant	Tunnel	DGM 1 in	DGM 1 out	Filter #1	DGM 2 in	DGM 2 out	Filter #2	Pitot	Air Return	Average	
Mean	292.2	189.9	216.6	227.7	244.0	225.5	80.5	120.6	76.2	76.2	-212.4	76.5	76.2	-310.5	102.9	77.9		
MAXIMUM	472.1	218.8	266.9	285.4	346.8	411.4	83.8	201.6	78.6	78.6	83.3	79.0	78.6	84.6	119.7	80.2		
MINIMUM	165.0	84.0	105.6	111.0	91.0	125.2	72.0	88.0	66.6	66.6	-5866.1	66.4	65.7	-5866.1	87.3	71.1		
Time (min)	(°F)	(°F)	(°F)	(°F)	(°F)	(°F)	(°F)	(°F)	(°F)	(°F)	(°F)	(°F)	(°F)	(°F)	(°F)	(°F)		
	1	2	3	4	5	6	7	8	9	10	11	12	13	14	15	16		
0	262.58	84.02	105.62	111.02	91.04	295.52	71.96	152.42	66.56	66.56	######	66.38	65.66	######	87.26	71.06	130.9	
10	379.76	95.72	130.82	131.18	123.26	388.4	73.58	184.28	68.18	68.0	######	67.64	67.1	######	99.5	72.68	172.1	
20	393.62	107.78	149.18	151.88	144.32	395.96	74.66	191.84	69.26	69.44	######	68.9	68.18	######	104.72	72.5	189.4	
30	388.04	119.3	175.82	176.54	163.04	387.5	75.74	191.84	70.34	70.34	74.66	69.8	69.44	######	106.52	72.86	204.5	
40	369.5	131.0	196.34	196.88	181.4	369.86	76.82	184.46	70.7	70.52	75.02	70.34	70.16	74.66	105.8	73.76	215.0	
50	361.94	141.98	210.74	211.1	199.22	373.82	78.26	187.88	72.14	72.14	76.46	71.6	71.24	75.02	107.6	75.2	225.0	
60	371.3	153.68	222.26	226.22	217.94	380.66	77.36	188.06	72.86	72.68	77.54	72.32	72.14	76.1	109.76	75.38	238.3	
70	416.48	165.56	234.68	242.24	239.54	411.44	78.8	201.56	72.5	72.68	77.9	72.68	72.5	75.92	115.52	75.02	259.7	
80	419.9	181.22	249.8	260.06	261.68	401.54	78.44	200.48	73.22	73.4	78.8	73.4	72.86	76.64	116.6	76.1	274.5	
90	472.1	196.7	259.52	275.54	286.52	337.82	83.84	166.46	74.48	74.3	79.52	74.3	73.94	77.72	119.66	76.82	298.1	
100	381.56	213.44	266.9	285.44	307.4	284.9	80.24	136.58	74.3	74.48	79.34	74.48	73.94	77.9	111.92	76.28	290.9	
110	331.88	215.78	260.24	277.52	318.56	275.36	78.8	128.12	74.3	74.48	79.16	74.48	74.3	77.9	108.68	77.54	280.8	
120	299.3	213.98	252.14	264.92	327.2	261.32	79.88	121.46	74.84	74.66	79.34	75.02	74.66	78.26	105.62	76.1	271.5	
130	285.98	210.38	246.74	253.76	335.12	262.94	80.24	137.66	75.02	75.02	79.16	75.2	74.84	78.26	104.9	78.08	266.4	
140	269.78	206.78	240.44	246.74	342.5	240.26	80.6	119.48	74.84	75.02	78.8	75.2	75.2	78.26	103.28	77.18	261.2	
150	237.56	203.0	230.72	238.64	346.28	272.3	80.06	132.08	75.2	75.38	78.98	75.56	75.38	78.26	101.12	77.54	251.2	
160	240.8	200.12	229.1	236.48	346.82	299.48	80.24	148.46	75.56	75.56	78.98	75.74	75.56	78.26	102.92	77.72	250.7	Start
170	448.16	205.52	230.36	244.04	346.46	303.26	82.58	158.36	75.56	75.38	81.32	75.92	75.74	82.4	117.14	78.26	294.9	
180	432.86	218.84	228.2	244.76	333.14	264.38	80.6	125.78	75.74	75.74	83.3	76.28	75.74	84.56	113.9	78.08	291.6	
190	428.18	217.22	224.78	244.4	313.34	257.9	80.6	121.82	76.28	75.92	83.12	76.46	76.1	84.02	113.0	77.18	285.6	
200	423.5	212.36	221.54	245.84	293.18	252.5	80.78	118.4	76.28	76.28	82.76	76.64	76.28	82.76	112.28	77.18	279.3	
210	418.46	208.94	221.0	249.08	275.54	247.46	80.24	116.6	76.28	76.28	81.86	76.82	76.46	82.22	111.56	78.08	274.6	
220	398.3	207.86	221.36	253.4	260.78	240.62	82.76	114.62	76.64	76.46	81.32	77.18	76.64	81.68	110.3	77.9	268.3	
230	399.74	208.4	224.06	257.9	248.72	239.0	82.76	113.9	77.0	76.82	80.96	77.36	76.82	81.68	110.66	78.62	267.8	
240	392.9	209.12	226.22	260.78	238.82	235.94	80.24	113.18	77.18	77.0	81.32	77.54	77.18	81.86	110.12	78.8	265.6	
250	389.66	210.92	228.56	260.78	231.44	228.38	81.5	111.02	76.46	76.64	81.14	77.18	77.0	81.5	109.94	78.44	264.3	
260	367.7	211.82	227.66	257.72	225.32	217.22	80.06	107.6	76.28	76.46	80.6	77.18	77.0	80.24	107.42	77.9	258.0	
270	359.42	209.84	225.68	253.58	220.64	215.42	79.88	107.78	76.1	76.64	80.24	77.18	76.82	79.7	106.88	78.26	253.8	
280	359.06	208.22	224.6	250.7	216.86	213.8	82.94	106.34	76.64	77.0	80.06	77.54	77.18	79.88	106.7	78.08	251.9	

DROLET POÊLES FOYERS
Fichier: Cert_B415_2010-02-04
Onglet: Sheet1

page 1 de 1

imprimé le: 2016-09-06

002- Appendix B- Data and Calculation Forms (page 11 of 39)

Données brutes du Multiscan

	Top	Back	R.Side	L.Side	Bottom	Flue	Ambiant	Tunnel	DGM 1 in	DGM 1 out	Filter #1	DGM 2 in	DGM 2 out	Filter #2	Pitot	Air Return	Average
Mean	292.2	189.9	216.6	227.7	244.0	225.5	80.5	120.6	76.2	76.2	-212.4	76.5	76.2	-310.5	102.9	77.9	
MAXIMUM	472.1	218.8	266.9	285.4	346.8	411.4	83.8	201.6	78.6	78.6	83.3	79.0	78.6	84.6	119.7	80.2	
MINIMUM	165.0	84.0	105.6	111.0	91.0	125.2	72.0	88.0	66.6	66.6	-5866.1	66.4	65.7	-5866.1	87.3	71.1	
Time (min)	Top	Back	R.Side	L.Side	Bottom	Flue	Ambiant	Tunnel	DGM 1 in	DGM 1 out	Filter #1	DGM 2 in	DGM 2 out	Filter #2	Pitot	Air Return	Average
	(°F)	(°F)	(°F)	(°F)	(°F)	(°F)	(°F)	(°F)	(°F)	(°F)	(°F)	(°F)	(°F)	(°F)	(°F)	(°F)	
290	365.9	206.96	222.08	248.0	213.8	214.34	80.6	106.16	77.0	77.0	80.06	77.54	77.18	79.88	106.88	78.44	251.3
300	358.34	205.34	220.46	245.84	211.28	206.78	80.78	104.36	77.18	77.0	79.88	77.72	77.36	80.06	106.16	79.34	248.3
310	338.18	204.26	220.64	246.02	209.66	193.46	81.14	102.2	77.0	77.18	79.7	77.72	77.54	79.52	104.54	78.98	243.8
320	294.62	203.18	219.2	243.32	208.22	175.82	81.14	98.96	77.36	77.36	79.34	77.9	77.54	79.52	102.38	79.34	233.7
330	277.34	200.66	216.14	236.48	208.04	317.3	82.4	140.9	77.54	77.36	79.16	78.08	77.9	79.34	104.72	80.24	227.7
340	313.7	201.38	220.1	236.84	208.94	192.74	81.86	103.46	77.9	77.9	79.88	78.44	78.08	79.52	104.18	79.7	236.2
350	293.72	202.64	221.72	239.0	211.1	177.08	82.4	99.14	77.9	77.9	79.7	78.62	78.26	78.98	102.56	79.88	233.6
360	284.72	203.9	226.04	241.34	213.26	185.18	80.96	104.72	78.08	78.08	79.16	78.62	78.44	78.44	102.74	79.16	233.9
370	246.02	205.16	226.58	239.36	215.6	149.9	82.58	94.64	77.9	78.08	78.08	78.62	78.26	74.66	99.14	79.52	226.5
380	227.3	201.74	221.0	232.52	217.76	168.8	82.58	103.28	78.08	78.08	78.26	78.8	78.44	75.02	99.32	79.88	220.1
390	219.56	200.66	219.38	230.0	219.56	165.38	83.12	102.56	78.26	78.26	79.7	78.98	78.62	76.82	98.78	80.06	217.8
400	209.66	200.84	217.94	227.84	221.36	162.14	82.94	102.2	78.08	78.26	80.78	78.8	78.62	78.8	98.06	79.34	215.5
410	204.44	199.76	216.5	226.4	223.7	158.54	80.78	101.12	78.26	78.26	81.14	78.8	78.62	79.52	97.7	80.06	214.2
420	199.04	198.68	214.7	225.14	225.86	156.92	80.78	100.4	78.08	78.26	81.32	78.62	78.62	80.06	96.98	79.52	212.7
430	197.42	197.24	212.72	224.6	228.02	155.12	82.22	99.5	78.26	78.26	81.32	78.8	78.62	80.06	96.44	78.44	212.0
440	195.08	196.88	211.82	223.34	230.0	153.86	80.6	98.96	78.26	78.08	81.32	78.62	78.44	80.24	96.44	79.52	211.4
450	192.02	195.98	211.28	221.72	231.98	152.24	81.14	98.78	78.26	78.08	81.32	78.62	78.44	80.06	96.44	80.24	210.6
460	191.48	195.44	210.92	219.74	233.96	155.48	81.14	99.14	77.72	78.08	80.96	78.26	78.62	80.24	96.44	80.06	210.3
470	192.38	194.72	210.74	218.12	237.2	156.74	82.04	100.04	77.9	77.9	80.96	78.62	78.26	80.06	96.44	79.52	210.6
480	192.38	193.64	211.28	215.78	240.62	156.38	81.5	99.5	78.08	78.08	81.14	78.62	78.26	80.06	95.9	78.26	210.7
490	194.18	194.36	211.64	214.88	244.4	155.84	82.4	99.14	78.26	78.08	80.78	78.62	78.44	79.88	95.72	78.62	211.9
500	193.1	192.38	212.0	212.54	248.36	153.5	82.04	98.42	77.9	78.08	80.78	78.44	78.26	79.7	96.08	79.34	211.7
510	189.5	190.76	212.18	209.84	251.6	151.52	81.5	97.88	78.08	78.26	80.96	78.62	78.26	79.7	95.18	78.8	210.8
520	186.08	188.42	211.28	207.68	254.12	150.44	81.68	97.52	77.9	78.08	80.6	78.26	78.08	79.34	94.1	76.82	209.5
530	177.98	185.36	209.12	204.44	255.92	135.86	80.24	92.12	78.08	78.08	80.24	78.26	78.08	79.34	93.92	78.62	206.6
540	174.56	182.48	205.34	200.84	257.0	132.62	80.78	91.4	78.26	78.26	80.42	78.62	78.08	79.34	93.74	78.98	204.0
550	170.24	178.34	201.38	196.34	256.82	130.64	81.5	90.68	78.44	78.44	80.6	78.8	78.26	79.7	93.56	79.7	200.6
560	170.96	179.06	203.18	197.6	257.54	131.36	80.96	90.68	78.62	78.62	80.42	78.62	78.26	79.88	93.92	79.52	201.7
570	173.3	184.64	212.54	204.44	255.02	127.76	80.96	88.52	78.44	78.44	80.6	78.8	78.44	79.7	95.36	78.44	206.0
580	169.88	181.58	208.94	200.84	253.76	126.68	80.6	87.98	78.62	78.62	80.24	78.62	78.44	79.7	94.64	78.26	203.0
590	168.08	177.08	205.34	195.8	251.24	125.24	81.14	87.98	78.44	78.44	80.42	78.62	78.62	79.7	94.1	78.44	199.5
600	165.02	173.12	201.56	190.94	249.44	125.24	81.5	87.98	78.44	78.26	80.24	78.62	78.26	79.52	93.92	79.16	196.0

DROLET POÊLES FOYERS
Fichier: Cert_B415_2010-02-04
Onglet: Sheet1

page 1 de 1

imprimé le: 2016-09-06

002- Appendix B- Data and Calculation Forms (page 12 of 39)

Intertek

E&E Boiler Tunnel Traverse Worksheet

Static Pressure: 0.0575

Barometer: 30.24

	TUNNEL VELOCITY	TUNNEL TEMP	SQUARE ROOT
A CENTER	0.053	126.4	0.2291
B CENTER	0.053	140.4	0.2291
A1	0.043	131.2	0.2062
A2	0.050	135.4	0.2236
A3	0.045	135.6	0.2121
A4	0.033	135.4	0.1803
B1	0.058	134.2	0.2398
B2	0.055	130.6	0.2345
B3	0.055	129.2	0.2345
B4	0.058	128.6	0.2398
AVERAGE		132.7	0.2229

PITOT CONSTANT= 0.9728

002- Appendix B- Data and Calculation Forms (page 13 of 39)

Intertek

E&E FUEL LOAD DATA SHEET

Manufacturer: SBI
Model: MAX Caddy
Run #: 6
Test Date: 2010-02-05

Control#: 14.27
Tech: C. Paré

Test Load Weight:

	Lower	Ideal	Upper
	40.50	45.00	49.50

Firebox Volume: 4.5 cu. ft

Load Volume: 0.0000 cu. ft

Loading Density: 10.369 lbs./ft3

Number of Spaces:

Spacer weight:

Load Density (wet): #DIV/0! lbs./ft3

Dry Wood Density: #DIV/0!

Piece Size: Thick	x Wide	x Length	Weight lbs	Meter Moisture Content Dry Uncorrected %			Ave. MC x Weight	Volume Cubic Inches
			9.06	19.20	22.80	20.80	20.93	0.00
			9.66	23.30	23.70	28.40	25.13	0.00
			6.80	21.90	21.00	22.20	21.70	0.00
			6.99	20.40	23.10	23.00	22.17	0.00
			6.49	18.10	20.40	23.70	20.73	0.00
			7.66	18.90	18.20	21.80	19.63	0.00
						SUM MCxWT	21.72	

Test Load Weight: 46.66 lbs.

Dry Weight: 17.39 kg.

Wet: 17.84 must be 15-25

Average Moisture Content: %

Dry: 21.72

21.72 Must be 18-28

002- Appendix B- Data and Calculation Forms (page 14 of 39)

002- Appendix B- Data and Calculation Forms (page 15 of 39)

05.02.2010	05.02.2010	11:21:10											
05.02.2010	11:21:10	COM1: SBI_1: U230015606	Measure	C1: CO	1.5 %	C2: CO2	13.1 %	C3: CO	900 vpm	C4: O2	5.24 %		
05.02.2010	11:31:10	COM1: SBI_1: U230015606	Measure	C1: CO	0.2 %	C2: CO2	8.91 %	C3: CO	788 vpm	C4: O2	11.5 %		
05.02.2010	11:41:10	COM1: SBI_1: U230015606	Measure	C1: CO	0.3 %	C2: CO2	9.04 %	C3: CO	788 vpm	C4: O2	11.2 %		
05.02.2010	11:51:10	COM1: SBI_1: U230015606	Measure	C1: CO	0.3 %	C2: CO2	8.63 %	C3: CO	788 vpm	C4: O2	11.6 %		
05.02.2010	12:01:10	COM1: SBI_1: U230015606	Measure	C1: CO	0.4 %	C2: CO2	8.75 %	C3: CO	788 vpm	C4: O2	11.2 %		
05.02.2010	12:11:10	COM1: SBI_1: U230015606	Measure	C1: CO	0.4 %	C2: CO2	8.22 %	C3: CO	788 vpm	C4: O2	11.8 %		
05.02.2010	12:21:10	COM1: SBI_1: U230015606	Measure	C1: CO	0.4 %	C2: CO2	9.07 %	C3: CO	788 vpm	C4: O2	10.9 %		
05.02.2010	12:31:10	COM1: SBI_1: U230015606	Measure	C1: CO	0.4 %	C2: CO2	8.82 %	C3: CO	788 vpm	C4: O2	11.4 %		
05.02.2010	12:41:10	COM1: SBI_1: U230015606	Measure	C1: CO	0.3 %	C2: CO2	8.88 %	C3: CO	788 vpm	C4: O2	11.1 %		
05.02.2010	12:51:10	COM1: SBI_1: U230015606	Measure	C1: CO	0.2 %	C2: CO2	8.11 %	C3: CO	788 vpm	C4: O2	12.1 %		
05.02.2010	13:01:10	COM1: SBI_1: U230015606	Measure	C1: CO	0.2 %	C2: CO2	8.37 %	C3: CO	788 vpm	C4: O2	11.9 %		
05.02.2010	13:11:10	COM1: SBI_1: U230015606	Measure	C1: CO	0.2 %	C2: CO2	8.32 %	C3: CO	788 vpm	C4: O2	12.1 %		
05.02.2010	13:21:10	COM1: SBI_1: U230015606	Measure	C1: CO	0.3 %	C2: CO2	8.34 %	C3: CO	788 vpm	C4: O2	11.9 %		
05.02.2010	13:31:10	COM1: SBI_1: U230015606	Measure	C1: CO	0.3 %	C2: CO2	7.55 %	C3: CO	788 vpm	C4: O2	12.3 %		
05.02.2010	13:41:10	COM1: SBI_1: U230015606	Measure	C1: CO	0.4 %	C2: CO2	8.53 %	C3: CO	788 vpm	C4: O2	11.2 %		
05.02.2010	13:51:10	COM1: SBI_1: U230015606	Measure	C1: CO	0.4 %	C2: CO2	9.15 %	C3: CO	788 vpm	C4: O2	10.9 %		
05.02.2010	14:01:10	COM1: SBI_1: U230015606	Measure	C1: CO	0.2 %	C2: CO2	8.54 %	C3: CO	788 vpm	C4: O2	11 %		
05.02.2010	14:11:10	COM1: SBI_1: U230015606	Measure	C1: CO	0.3 %	C2: CO2	7.24 %	C3: CO	788 vpm	C4: O2	12.7 %		
05.02.2010	14:21:10	COM1: SBI_1: U230015606	Measure	C1: CO	0.4 %	C2: CO2	7.13 %	C3: CO	788 vpm	C4: O2	12.8 %		
05.02.2010	14:31:10	COM1: SBI_1: U230015606	Measure	C1: CO	0.4 %	C2: CO2	6.63 %	C3: CO	788 vpm	C4: O2	12.5 %		
05.02.2010	14:41:10	COM1: SBI_1: U230015606	Measure	C1: CO	0.5 %	C2: CO2	5.16 %	C3: CO	788 vpm	C4: O2	13.7 %		
05.02.2010	14:51:10	COM1: SBI_1: U230015606	Measure	C1: CO	0.5 %	C2: CO2	4.68 %	C3: CO	788 vpm	C4: O2	14.5 %		
05.02.2010	15:01:10	COM1: SBI_1: U230015606	Measure	C1: CO	0.6 %	C2: CO2	4.4 %	C3: CO	788 vpm	C4: O2	15 %		
05.02.2010	15:11:10	COM1: SBI_1: U230015606	Measure	C1: CO	0.4 %	C2: CO2	5.03 %	C3: CO	788 vpm	C4: O2	15 %		
05.02.2010	15:21:10	COM1: SBI_1: U230015606	Measure	C1: CO	0.3 %	C2: CO2	5.03 %	C3: CO	788 vpm	C4: O2	14.8 %		
05.02.2010	15:31:10	COM1: SBI_1: U230015606	Measure	C1: CO	0.4 %	C2: CO2	4.63 %	C3: CO	788 vpm	C4: O2	14.9 %		
05.02.2010	15:41:10	COM1: SBI_1: U230015606	Measure	C1: CO	0.4 %	C2: CO2	4.51 %	C3: CO	788 vpm	C4: O2	15.3 %		
05.02.2010	15:51:10	COM1: SBI_1: U230015606	Measure	C1: CO	0.3 %	C2: CO2	4.77 %	C3: CO	788 vpm	C4: O2	15.1 %		
05.02.2010	16:01:10	COM1: SBI_1: U230015606	Measure	C1: CO	0.4 %	C2: CO2	4.15 %	C3: CO	788 vpm	C4: O2	15.3 %		
05.02.2010	16:11:10	COM1: SBI_1: U230015606	Measure	C1: CO	0.4 %	C2: CO2	3.71 %	C3: CO	788 vpm	C4: O2	15.7 %		
05.02.2010	16:21:10	COM1: SBI_1: U230015606	Measure	C1: CO	0.5 %	C2: CO2	3.8 %	C3: CO	788 vpm	C4: O2	15.7 %		
05.02.2010	16:31:10	COM1: SBI_1: U230015606	Measure	C1: CO	0.5 %	C2: CO2	3.82 %	C3: CO	788 vpm	C4: O2	15.9 %		
05.02.2010	16:41:10	COM1: SBI_1: U230015606	Measure	C1: CO	0.5 %	C2: CO2	3.84 %	C3: CO	788 vpm	C4: O2	16 %		

002- Appendix B- Data and Calculation Forms (page 16 of 39)

05.02.2010	16:51:10	COM1: SBI_1: U230015606	Measure	C1: CO	0.5 %	C2: CO2	3.84 %	C3: CO	788 vpm	C4: O2	16 %
05.02.2010	17:01:10	COM1: SBI_1: U230015606	Measure	C1: CO	0.5 %	C2: CO2	3.65 %	C3: CO	788 vpm	C4: O2	16.2 %
05.02.2010	17:11:10	COM1: SBI_1: U230015606	Measure	C1: CO	0.5 %	C2: CO2	3.53 %	C3: CO	788 vpm	C4: O2	16.2 %
05.02.2010	17:21:10	COM1: SBI_1: U230015606	Measure	C1: CO	0.6 %	C2: CO2	3.54 %	C3: CO	788 vpm	C4: O2	16.2 %
05.02.2010	17:31:10	COM1: SBI_1: U230015606	Measure	C1: CO	0.6 %	C2: CO2	3.6 %	C3: CO	788 vpm	C4: O2	16.2 %
05.02.2010	17:41:10	COM1: SBI_1: U230015606	Measure	C1: CO	0.5 %	C2: CO2	3.49 %	C3: CO	788 vpm	C4: O2	16.3 %
05.02.2010	17:51:10	COM1: SBI_1: U230015606	Measure	C1: CO	0.5 %	C2: CO2	3.33 %	C3: CO	788 vpm	C4: O2	16.4 %
05.02.2010	18:01:10	COM1: SBI_1: U230015606	Measure	C1: CO	0.5 %	C2: CO2	3.23 %	C3: CO	788 vpm	C4: O2	16.6 %
05.02.2010	18:11:10	COM1: SBI_1: U230015606	Measure	C1: CO	0.5 %	C2: CO2	3.24 %	C3: CO	788 vpm	C4: O2	16.6 %
05.02.2010	18:21:10	COM1: SBI_1: U230015606	Measure	C1: CO	0.5 %	C2: CO2	3.28 %	C3: CO	788 vpm	C4: O2	16.7 %
05.02.2010	18:31:10	COM1: SBI_1: U230015606	Measure	C1: CO	0.5 %	C2: CO2	3.2 %	C3: CO	788 vpm	C4: O2	16.7 %
05.02.2010	18:41:10	COM1: SBI_1: U230015606	Measure	C1: CO	0.5 %	C2: CO2	3.08 %	C3: CO	788 vpm	C4: O2	16.8 %
05.02.2010	18:51:10	COM1: SBI_1: U230015606	Measure	C1: CO	0.5 %	C2: CO2	3.02 %	C3: CO	788 vpm	C4: O2	16.9 %
05.02.2010	19:01:10	COM1: SBI_1: U230015606	Measure	C1: CO	0.5 %	C2: CO2	3.07 %	C3: CO	788 vpm	C4: O2	16.9 %
05.02.2010	19:11:10	COM1: SBI_1: U230015606	Measure	C1: CO	0.4 %	C2: CO2	2.96 %	C3: CO	788 vpm	C4: O2	16.9 %
05.02.2010	19:21:10	COM1: SBI_1: U230015606	Measure	C1: CO	0.4 %	C2: CO2	2.89 %	C3: CO	788 vpm	C4: O2	16.9 %
05.02.2010	19:23:07										

002- Appendix B- Data and Calculation Forms (page 17 of 39)

Données brutes du Multiscan

DATE: 05-02-10 **Test :** 6

Mean	285.0	196.9	225.7	236.5	242.3	215.4	80.0	119.2	75.2	75.5	-652.5	75.8	75.8	-744.9	103.7	77.2		
MAXIMUM	444.0	231.3	271.0	270.1	365.4	411.1	84.0	218.5	78.6	78.1	85.5	78.6	77.9	85.5	119.1	79.9		
MINIMUM	162.0	96.1	125.1	136.9	131.2	118.6	74.1	82.6	68.7	68.7	-5866.1	68.5	68.4	-5866.1	91.0	70.7		
Time (min)	Top	Back	R.Side	L.Side	Bottom	Flue	Ambiant	Tunnel	DGM 1 in	DGM 1 out	Filter #1	DGM 2 in	DGM 2 out	Filter #2	Pitot	Air Return	Average	
	(°F)	(°F)	(°F)	(°F)	(°F)	(°F)	(°F)	(°F)	(°F)	(°F)	(°F)	(°F)	(°F)	(°F)	(°F)	(°F)		
	1	2	3	4	5	6	7	8	9	10	11	12	13	14	15	16		
0	279.86	96.08	125.06	136.94	131.18	376.16	74.3	195.8	68.72	68.72	######	68.54	68.36	######	96.44	70.7	153.8	
10	367.34	107.06	136.22	159.98	153.32	377.06	74.12	200.12	69.8	69.26	######	69.26	69.08	######	101.84	71.06	184.8	
20	377.06	117.5	152.24	185.72	164.66	377.96	75.92	200.48	70.52	70.34	######	69.8	69.8	######	104.54	72.68	199.4	
30	382.82	127.22	167.36	206.78	175.64	377.24	78.98	201.56	71.6	71.24	######	70.88	70.88	######	107.6	73.94	212.0	
40	384.26	136.76	181.22	225.5	186.62	380.12	79.16	203.36	72.5	72.14	######	71.78	71.6	######	109.04	75.02	222.9	
50	412.88	146.66	196.52	240.44	197.96	411.08	79.88	217.58	72.86	72.86	######	72.5	72.32	######	114.8	75.56	238.9	
60	425.3	158.72	216.86	250.16	210.74	404.06	78.62	218.48	73.94	73.58	######	73.22	73.04	######	117.14	76.28	252.4	
70	409.1	171.86	235.76	256.64	226.94	401.9	80.42	213.62	74.66	74.3	######	74.12	73.76	######	118.22	77.18	260.1	
80	393.62	185.18	251.6	258.98	247.28	383.0	80.24	205.16	75.56	75.56	76.46	75.02	74.66	######	116.6	77.54	267.3	
90	423.32	197.6	261.86	259.34	269.42	309.74	81.14	152.06	76.46	76.28	79.7	75.38	75.56	77.18	118.76	78.26	282.3	
100	366.08	212.72	270.14	259.52	293.36	295.88	82.58	135.68	76.46	76.28	80.6	76.1	76.1	78.08	114.44	78.62	280.4	
110	347.36	217.58	270.32	256.64	311.0	317.66	84.02	138.2	76.1	76.1	80.78	76.1	76.1	78.62	113.54	78.44	280.6	
120	318.38	224.24	271.04	255.2	327.74	257.0	81.14	123.62	76.28	76.1	80.96	76.46	76.28	78.62	109.94	78.8	279.3	
130	276.62	227.12	263.66	251.42	342.32	215.42	80.24	107.78	76.46	76.46	80.78	76.46	76.64	78.62	105.98	77.72	272.2	
140	256.46	222.44	251.42	244.58	350.42	215.96	81.68	112.46	76.46	76.46	80.78	76.64	76.64	78.62	104.72	78.8	265.1	
150	192.56	215.06	241.7	239.72	357.98	310.46	81.32	156.2	76.46	76.46	80.6	76.82	76.64	79.16	105.8	79.52	249.4	start
160	444.02	220.64	242.24	248.9	365.36	296.42	82.94	161.42	76.46	76.46	83.84	76.82	76.64	82.94	119.12	78.98	304.2	
170	405.32	231.26	231.62	248.72	354.2	248.36	82.58	124.7	76.46	76.82	85.46	77.18	76.82	85.46	114.26	79.52	294.2	
180	398.84	228.02	221.9	244.4	334.04	242.96	82.04	120.74	77.0	77.0	84.2	77.36	77.36	84.56	113.18	79.34	285.4	
190	382.28	222.08	214.52	243.68	312.8	234.68	81.32	117.14	76.82	77.18	83.3	77.36	77.36	82.94	111.2	79.16	275.1	
200	374.9	216.68	210.92	244.76	293.54	233.6	80.78	116.6	76.46	77.0	82.4	77.36	77.18	82.04	111.02	78.98	268.2	
210	361.76	212.36	209.84	246.92	276.98	226.58	81.68	113.72	76.64	77.0	82.04	77.54	77.36	81.5	109.58	79.16	261.6	
220	376.88	209.66	210.56	250.16	262.76	233.6	82.04	115.16	76.64	77.0	81.68	77.36	77.36	81.14	110.66	79.88	262.0	
230	370.4	211.28	212.18	254.48	251.42	227.48	81.68	113.72	77.0	77.18	81.68	77.54	77.36	80.96	109.76	79.52	260.0	
240	368.78	212.9	215.24	258.26	242.6	226.76	80.6	113.36	76.28	76.82	81.5	77.18	77.54	80.42	109.4	78.8	259.6	
250	347.54	215.96	217.22	259.88	235.94	215.78	80.42	110.12	76.28	76.82	81.14	77.18	77.36	80.06	107.78	79.52	255.3	
260	338.36	216.68	219.38	260.78	231.62	212.9	81.68	109.04	76.64	76.82	80.96	77.36	77.36	80.24	107.6	79.88	253.4	
270	329.0	216.14	221.36	261.68	228.74	208.58	81.32	107.78	76.82	77.0	80.78	77.54	77.36	79.88	107.06	79.34	251.4	
280	332.6	215.24	224.6	262.94	226.58	210.2	81.68	107.96	77.0	77.0	80.78	77.72	77.54	79.88	107.78	79.52	252.4	

DROLET POÊLES FOYERS
Fichier: Cert_B415_2010-02-05
Onglet: Sheet1

page 1 de 1

imprimé le: 2016-09-06

002- Appendix B- Data and Calculation Forms (page 18 of 39)

Données brutes du Multiscan

	Top	Back	R.Side	L.Side	Bottom	Flue	Ambiant	Tunnel	DGM 1 in	DGM 1 out	Filter #1	DGM 2 in	DGM 2 out	Filter #2	Pitot	Air Return	Average
Mean	285.0	196.9	225.7	236.5	242.3	215.4	80.0	119.2	75.2	75.5	-652.5	75.8	75.8	-744.9	103.7	77.2	
MAXIMUM	444.0	231.3	271.0	270.1	365.4	411.1	84.0	218.5	78.6	78.1	85.5	78.6	77.9	85.5	119.1	79.9	
MINIMUM	162.0	96.1	125.1	136.9	131.2	118.6	74.1	82.6	68.7	68.7	-5866.1	68.5	68.4	-5866.1	91.0	70.7	
Time (min)	(°F)	(°F)	(°F)	(°F)	(°F)	(°F)	(°F)	(°F)	(°F)	(°F)	(°F)	(°F)	(°F)	(°F)	(°F)	(°F)	
290	322.7	217.58	227.12	264.2	224.96	199.22	81.14	105.44	76.82	77.0	80.6	77.72	77.72	79.52	105.98	78.44	251.3
300	325.76	218.12	228.38	265.64	223.34	205.88	80.6	106.34	76.46	77.0	80.42	77.54	77.54	79.16	106.7	78.8	252.2
310	337.1	217.4	231.44	269.24	221.9	215.24	81.14	107.96	76.64	77.18	80.24	77.36	77.72	78.98	108.32	79.16	255.4
320	359.24	216.32	233.78	270.14	220.64	207.68	82.4	106.52	76.64	77.18	79.88	77.72	77.54	78.98	107.96	78.62	260.0
330	324.14	214.7	232.52	266.54	219.2	192.92	81.32	103.28	76.46	77.0	79.7	77.36	77.54	78.8	105.98	78.8	251.4
340	308.84	210.56	229.64	259.88	217.76	186.62	82.76	101.84	76.64	77.18	79.7	77.54	77.72	78.26	104.72	78.62	245.3
350	289.58	207.32	226.76	253.22	216.32	169.34	81.86	98.78	76.82	77.18	79.7	77.72	77.72	78.08	102.92	79.34	238.6
360	259.52	204.44	223.52	244.94	215.24	165.38	81.14	100.04	76.82	77.36	79.52	77.72	77.54	77.36	101.3	79.34	229.5
370	246.38	202.1	221.54	240.26	214.7	179.6	80.78	106.52	76.64	77.36	78.44	77.36	77.9	77.18	100.76	79.16	225.0
380	239.54	204.08	223.88	240.8	215.06	178.88	82.58	106.88	76.64	77.36	75.56	77.72	77.72	76.64	100.4	78.62	224.7
390	243.5	206.78	229.1	242.06	216.14	192.92	80.78	112.64	76.46	77.18	75.92	77.54	77.54	76.46	100.94	78.62	227.5
400	251.78	211.46	238.46	246.2	218.84	198.14	81.14	114.44	76.28	77.0	78.08	77.36	77.18	75.56	101.66	77.9	233.3
410	249.26	216.86	247.1	249.98	222.98	183.02	79.88	105.08	75.56	76.46	79.16	76.82	77.0	73.76	100.58	77.18	237.2
420	239.9	219.38	254.12	252.32	228.02	177.98	81.68	113.72	77.36	77.0	80.24	77.72	77.18	75.38	101.12	78.8	238.7
430	237.56	221.72	260.78	254.3	233.42	178.34	83.84	109.58	78.62	78.08	82.04	78.62	77.9	78.08	101.66	78.44	241.6
440	229.46	222.08	263.3	255.2	238.82	163.76	80.78	100.04	77.54	77.72	81.86	78.08	77.9	79.34	100.04	78.44	241.8
450	213.26	219.74	259.88	251.6	242.42	154.94	80.96	97.88	76.82	77.18	81.14	77.72	77.72	79.34	98.24	77.18	237.4
460	201.92	213.62	254.12	245.48	244.58	146.84	80.42	93.92	75.74	76.46	80.24	77.0	77.18	78.98	96.44	76.82	231.9
470	194.72	208.04	246.92	237.92	244.58	139.64	78.8	91.58	75.38	75.92	79.34	76.64	76.82	78.62	95.18	76.64	226.4
480	186.44	200.48	238.1	230.18	243.68	132.8	79.16	89.42	74.84	75.56	78.62	76.1	76.46	78.08	93.74	76.64	219.8
490	185.9	201.74	242.24	233.42	242.96	133.52	78.98	88.52	74.48	75.38	78.08	75.92	75.92	77.36	94.64	75.56	221.3
500	180.86	197.42	236.84	228.02	241.7	131.54	78.26	87.8	73.94	75.02	77.36	75.56	75.56	76.82	93.56	74.48	217.0
510	176.9	189.14	226.94	217.4	239.9	128.3	78.08	86.72	73.4	74.3	76.64	75.02	75.02	76.46	92.3	75.38	210.1
520	184.82	195.98	237.92	224.78	237.2	130.28	77.72	86.18	73.4	74.3	76.28	74.66	74.84	75.74	94.64	75.2	216.1
530	176.36	183.92	222.44	212.18	234.32	127.4	78.8	86.18	73.4	74.12	76.1	74.48	74.66	75.74	92.84	75.56	205.8
540	195.08	195.26	240.8	226.04	231.08	127.58	76.46	85.1	73.22	73.94	76.1	74.3	74.48	75.38	100.58	75.02	217.7
550	171.86	179.96	216.32	208.04	229.1	125.78	77.9	85.28	73.4	73.94	76.1	74.3	74.48	75.2	92.12	75.02	201.1
560	178.7	186.26	224.06	214.16	226.76	126.68	77.72	84.92	73.04	73.94	75.92	74.3	74.48	75.2	93.92	75.2	206.0
570	182.12	184.46	224.24	211.64	225.68	123.62	77.36	84.38	73.22	73.76	75.92	74.12	74.3	75.2	97.88	74.84	205.6
580	168.44	176.9	211.28	201.38	224.6	124.34	78.08	84.74	73.22	73.76	75.92	74.3	74.12	75.02	92.12	75.92	196.5
590	171.68	180.86	216.5	203.9	223.52	124.7	77.9	84.56	73.22	73.94	75.74	74.3	74.3	75.2	92.84	75.2	199.3
600	185.72	186.44	227.84	209.84	222.44	123.08	77.36	84.2	73.22	73.76	75.56	74.3	74.12	75.02	99.32	74.3	206.5
610	176.72	178.88	217.04	200.12	222.08	121.1	77.36	83.84	73.22	73.76	75.56	74.12	74.12	74.84	96.8	75.02	199.0
620	162.14	171.14	203.0	189.32	221.36	118.94	77.9	83.48	73.4	73.76	75.56	74.3	74.12	74.84	91.04	75.92	189.4
630	161.96	172.94	205.16	190.76	221.0	118.94	77.54	83.12	73.22	73.58	75.56	74.12	74.12	74.84	91.4	74.84	190.4
640	163.76	174.2	205.52	190.76	220.82	118.58	77.54	82.58	73.22	73.76	75.56	74.12	74.12	74.84	91.76	74.84	191.0

DROLET POÊLES FOYERS
Fichier: Cert_B415_2010-02-05
Onglet: Sheet1

page 1 de 1

imprimé le: 2016-09-06

002- Appendix B- Data and Calculation Forms (page 19 of 39)

E&E Boiler Tunnel Traverse Worksheet

Static Pressure: **0.14**

Barometer: 30.19

	TUNNEL VELOCITY	TUNNEL TEMP	SQUARE ROOT
A CENTER	0.073	115	0.2693
B CENTER	0.040	105.6	0.2000
A1	0.048	114	0.2179
A2	0.060	112.4	0.2449
A3	0.075	111	0.2739
A4	0.048	110.6	0.2179
B1	0.050	105	0.2236
B2	0.053	104.6	0.2291
B3	0.058	104	0.2398
B4	0.045	104	0.2121
AVERAGE		108.62	0.2329

PITOT CONSTANT= 0.9925

002- Appendix B- Data and Calculation Forms (page 20 of 39)

Intertek

E&E FUEL LOAD DATA SHEET

Manufacturer: SBI
Model: MAX Caddy
Run #: 1
Test Date: 2010-01-12

Control#: 3198245/20712-0000121
Tech: C. Paré

Test Load Weight:

		Lower	Ideal	Upper
Firebox Volume:	4.5 cu. ft	40.50	45.00	49.50
Load Volume:	0.0000 cu. ft		Loading Density:	10.520 lbs./ft3
Number of Spaces:			Load Density (wet):	#DIV/0! lbs./ft3
Spacer weight:			Dry Wood Density:	#DIV/0!

Piece Size: Thick	x Wide	x Length	Weight lbs	Meter Moisture Content Dry Uncorrected %			Ave. MC x Weight	Volume Cubic Inches
			7.26	18.10	22.00	18.80	142.54	0.00
			6.67	21.90	19.00	23.00	142.07	0.00
			7.52	24.30	19.50	22.10	165.19	0.00
			8.28	20.60	21.00	28.30	192.92	0.00
			6.50	17.60	18.80	25.50	134.12	0.00
			11.11	20.50	23.30	19.40	234.05	0.00
						SUM MCxWT	1010.889667	

Test Load Weight: 47.34 lbs.

Dry Weight: 17.69 kg.

Average Moisture Content: %

Dry: 21.35

21.35
Must be 18-28

Wet: 17.60
must be 15-25

002- Appendix B- Data and Calculation Forms (page 21 of 39)

12.01.2010	12.01.2010	11:28:31											
12.01.2010		11:28:31	COM1: SBI_1: U230015606	Measure	C1: CO	1.6 %	C2: CO2	15.4 %	C3: CO	900 vpm	C4: O2	3.41 %
12.01.2010		11:38:31	COM1: SBI_1: U230015606	Measure	C1: CO	0.3 %	C2: CO2	14.4 %	C3: CO	788 vpm	C4: O2	5.79 %
12.01.2010		11:48:31	COM1: SBI_1: U230015606	Measure	C1: CO	0.2 %	C2: CO2	12.8 %	C3: CO	583 vpm	C4: O2	7.44 %
12.01.2010		11:58:31	COM1: SBI_1: U230015606	Measure	C1: CO	0.1 %	C2: CO2	12.6 %	C3: CO	240 vpm	C4: O2	7.67 %
12.01.2010		12:08:31	COM1: SBI_1: U230015606	Measure	C1: CO	0.1 %	C2: CO2	10.4 %	C3: CO	347 vpm	C4: O2	9.84 %
12.01.2010		12:18:31	COM1: SBI_1: U230015606	Measure	C1: CO	0.1 %	C2: CO2	9.56 %	C3: CO	208 vpm	C4: O2	10.7 %
12.01.2010		12:28:31	COM1: SBI_1: U230015606	Measure	C1: CO	0.1 %	C2: CO2	8.83 %	C3: CO	310 vpm	C4: O2	11.5 %
12.01.2010		12:38:31	COM1: SBI_1: U230015606	Measure	C1: CO	0.1 %	C2: CO2	8.18 %	C3: CO	392 vpm	C4: O2	12 %
12.01.2010		12:48:31	COM1: SBI_1: U230015606	Measure	C1: CO	0.1 %	C2: CO2	8.04 %	C3: CO	248 vpm	C4: O2	12.1 %
12.01.2010		12:58:31	COM1: SBI_1: U230015606	Measure	C1: CO	0.1 %	C2: CO2	6.78 %	C3: CO	281 vpm	C4: O2	13.2 %
12.01.2010		13:08:31	COM1: SBI_1: U230015606	Measure	C1: CO	0.1 %	C2: CO2	5.86 %	C3: CO	599 vpm	C4: O2	14.1 %
12.01.2010		13:18:31	COM1: SBI_1: U230015606	Measure	C1: CO	0.2 %	C2: CO2	5.05 %	C3: CO	788 vpm	C4: O2	15.2 %
12.01.2010		13:28:31	COM1: SBI_1: U230015606	Measure	C1: CO	0.3 %	C2: CO2	4.18 %	C3: CO	788 vpm	C4: O2	15.9 %
12.01.2010		13:38:31	COM1: SBI_1: U230015606	Measure	C1: CO	0.4 %	C2: CO2	3.65 %	C3: CO	788 vpm	C4: O2	16.4 %
12.01.2010		13:48:31	COM1: SBI_1: U230015606	Measure	C1: CO	0.4 %	C2: CO2	3.22 %	C3: CO	788 vpm	C4: O2	16.8 %
12.01.2010		13:58:31	COM1: SBI_1: U230015606	Measure	C1: CO	0.4 %	C2: CO2	2.9 %	C3: CO	788 vpm	C4: O2	17.2 %
12.01.2010		14:08:31	COM1: SBI_1: U230015606	Measure	C1: CO	0.5 %	C2: CO2	2.72 %	C3: CO	788 vpm	C4: O2	17.3 %
12.01.2010		14:18:31	COM1: SBI_1: U230015606	Measure	C1: CO	0.4 %	C2: CO2	2.45 %	C3: CO	788 vpm	C4: O2	17.7 %
12.01.2010		14:28:31	COM1: SBI_1: U230015606	Measure	C1: CO	0.4 %	C2: CO2	2.38 %	C3: CO	788 vpm	C4: O2	17.8 %
12.01.2010		14:38:31	COM1: SBI_1: U230015606	Measure	C1: CO	0.4 %	C2: CO2	2.4 %	C3: CO	788 vpm	C4: O2	17.8 %
12.01.2010		14:48:31	COM1: SBI_1: U230015606	Measure	C1: CO	0.4 %	C2: CO2	2.29 %	C3: CO	788 vpm	C4: O2	18 %
12.01.2010		14:58:31	COM1: SBI_1: U230015606	Measure	C1: CO	0.3 %	C2: CO2	2.1 %	C3: CO	788 vpm	C4: O2	18.2 %

002- Appendix B- Data and Calculation Forms (page 22 of 39)

Données brutes du Multiscan

DATE: 12-01-10 **Test :** 1

Mean	373.9	246.0	273.8	290.6	327.3	360.0	88.2	202.0	81.0	81.2	-326.7	81.7	81.9	-329.3	124.1	84.8		
MAXIMUM	597.9	277.9	300.0	322.7	405.5	524.1	93.4	283.3	83.5	84.0	86.5	84.2	84.2	84.4	144.3	87.8		
MINIMUM	222.4	181.0	229.3	256.3	288.9	235.8	82.9	126.1	75.9	76.1	-5866.1	75.9	76.6	-5866.1	109.2	80.6		
Temps (min)	Top	Back	R.Side	L.Side	Bottom	Flue	Ambiant	Tunnel	DGM 1 in	DGM 1 out	Filter #1	DGM 2 in	DGM 2 out	Filter #2	Pitot	Air Return	Average	
	(°F)	(°F)	(°F)	(°F)	(°F)	(°F)	(°F)	(°F)	(°F)	(°F)	(°F)	(°F)	(°F)	(°F)	(°F)	(°F)		
	1	2	3	4	5	6	7	8	9	10	11	12	13	14	15	16		
0	448.16	181.04	229.28	258.44	288.86	443.84	82.94	240.8	75.92	76.1	######	75.92	76.64	######	126.32	81.68	281.2	
10	515.48	192.74	245.3	272.48	306.86	464.36	84.2	247.64	76.82	77.18	######	77.18	77.54	######	131.54	82.04	306.6	
20	503.42	210.92	273.2	292.82	318.2	415.94	87.08	226.94	77.72	78.08	81.5	78.08	78.62	78.44	127.58	81.86	319.7	
30	399.38	225.14	284.18	304.88	365.54	383.18	88.34	208.58	78.44	78.98	84.2	78.98	79.52	80.42	121.82	82.58	315.8	
40	357.98	236.48	287.78	312.8	384.8	347.54	85.64	174.74	78.98	79.34	84.56	79.34	79.88	81.5	118.94	81.68	316.0	
50	309.2	241.7	288.14	309.92	397.22	321.98	86.9	162.5	78.8	79.34	84.02	79.52	80.06	81.86	115.52	82.58	309.2	
60	304.88	242.78	287.78	308.84	399.74	320.36	85.28	164.12	78.8	79.34	83.84	79.88	80.06	81.5	115.16	84.02	308.8	Start
70	597.92	233.06	277.34	295.34	405.5	511.16	85.82	248.72	79.34	79.52	84.56	80.24	80.24	81.86	141.98	85.46	361.8	
80	567.14	228.92	256.64	278.42	388.76	524.12	89.78	254.12	79.7	79.88	86.18	80.96	80.96	83.12	144.32	86.36	344.0	
90	527.36	231.26	254.66	279.14	366.26	488.66	89.24	283.28	80.96	80.78	86.54	81.86	81.5	84.38	141.98	87.08	331.7	
100	528.44	236.66	264.02	284.9	346.64	488.12	91.58	281.66	80.78	80.6	84.92	81.5	81.5	82.58	142.88	87.26	332.1	
110	499.46	243.5	269.06	289.94	329.72	447.98	86.9	269.96	81.5	81.14	84.02	82.04	82.04	82.76	137.12	86.72	326.3	
120	465.98	249.8	275.9	296.6	316.22	424.58	90.32	261.68	82.04	82.04	83.48	82.76	82.58	82.4	132.8	86.9	320.9	
130	439.88	257.54	283.1	301.64	306.86	410.18	88.52	254.84	82.22	81.86	83.48	82.94	82.58	81.86	129.74	86.18	317.8	
140	425.12	263.84	288.32	307.04	300.74	396.86	92.3	248.9	82.58	82.4	83.48	83.3	83.12	81.86	128.3	87.44	317.0	
150	390.38	265.82	291.02	314.42	296.96	389.84	91.58	245.12	82.76	82.94	83.84	83.48	83.3	81.68	127.04	86.9	311.7	
160	381.56	270.32	294.98	322.7	295.7	369.14	93.38	207.86	83.12	83.3	84.02	83.84	83.66	81.5	124.88	86.0	313.1	
170	352.4	273.92	297.14	319.1	295.7	346.82	91.22	210.2	83.3	83.66	83.48	84.02	84.02	81.32	122.36	87.8	307.7	
180	331.52	277.88	300.02	316.22	297.14	330.44	88.16	201.2	83.48	83.84	84.2	84.02	84.2	82.04	121.1	87.08	304.6	
190	299.3	273.56	293.0	305.24	300.02	307.76	89.42	190.22	83.3	83.48	84.38	84.02	84.2	81.68	117.86	86.9	294.2	
200	271.94	267.08	282.74	292.1	301.64	289.58	91.22	178.88	83.48	83.66	84.2	84.02	84.02	81.14	115.16	86.18	283.1	
210	251.78	258.08	271.04	277.88	303.26	273.38	89.24	155.66	83.48	84.02	84.02	84.2	84.02	80.96	112.28	86.18	272.4	
220	252.32	264.02	278.24	282.92	306.5	267.26	90.14	152.06	82.94	83.3	83.12	83.66	83.84	80.6	114.08	84.92	276.8	
230	246.02	261.68	273.2	277.34	309.56	260.24	87.8	138.38	82.4	83.12	81.68	83.48	83.66	80.24	113.18	84.02	273.6	
240	231.98	252.14	261.14	267.26	311.54	250.34	87.98	133.52	81.86	82.22	81.5	83.12	83.3	79.52	110.66	84.02	264.8	
250	248.9	257.72	272.48	277.16	312.44	245.66	86.54	131.36	81.32	81.86	81.68	82.58	82.76	77.9	123.26	82.04	273.7	
260	222.44	242.06	248.54	256.28	312.44	243.14	86.36	129.74	80.96	81.68	81.86	82.22	82.4	76.82	109.22	85.64	256.4	
270	233.96	247.46	253.94	261.68	312.8	242.06	84.92	129.56	80.6	81.14	82.4	81.68	81.86	76.82	110.84	82.22	262.0	
280	238.1	245.84	257.9	263.12	313.34	235.76	84.56	126.14	80.24	80.78	82.4	81.32	81.68	76.46	121.1	80.6	263.7	

DROLET POÊLES FOYERS
Fichier: Cert_B415_2010-01-12
Onglet: Sheet1

page 1 de 1

imprimé le: 2016-09-06

002- Appendix B- Data and Calculation Forms (page 23 of 39)

Intertek

E&E Boiler Tunnel Traverse Worksheet

Static Pressure: 0.1

Barometer: 29.97

	TUNNEL VELOCITY	TUNNEL TEMP	SQUARE ROOT
A CENTER	0.065	205.8	0.2550
B CENTER	0.065	205.8	0.2550
A1	0.058	204	0.2408
A2	0.075	202	0.2739
A3	0.064	199.6	0.2530
A4	0.050	199.2	0.2236
B1	0.058	204	0.2408
B2	0.075	202	0.2739
B3	0.064	199.6	0.2530
B4	0.050	199.2	0.2236
AVERAGE		202.12	0.2492

PITOT CONSTANT= 0.9776

002- Appendix B- Data and Calculation Forms (page 24 of 39)

Intertek

E&E FUEL LOAD DATA SHEET

Manufacturer: SBI
Model: MAX Caddy
Run #: 2
Test Date: 2010-01-13

Control#: 3198245/20712-0000121
Tech: C. Paré

Test Load Weight:

	Lower	Ideal	Upper
	40.50	45.00	49.50

Firebox Volume: 4.5 cu. ft

Load Volume: 0.0000 cu. ft

Loading Density: 13.756 lbs./ft3

Number of Spaces:

Spacer weight:

Load Density (wet): #DIV/0! lbs./ft3

Dry Wood Density: #DIV/0!

Piece Size: Thick	x Wide	x Length	Weight lbs	Meter Moisture Content Dry	Uncorrected %	Ave. MC x Weight	Volume Cubic Inches
			9.60	17.10	20.90	25.20	202.24	0.00
			6.28	17.50	20.80	25.20	132.93	0.00
			7.19	23.00	26.30	25.90	180.23	0.00
			8.26	17.60	20.80	24.20	172.36	0.00
			8.01	18.10	17.60	24.20	159.93	0.00
			8.94	20.90	18.50	28.60	202.64	0.00
			5.69	19.30	25.20	16.40	115.51	0.00
			7.93	17.10	21.20	25.90	169.70	0.00
						SUM MCxWT	1335.536667	

Test Load Weight: 61.90 lbs.

Dry Weight: 23.09 kg.

Wet: 17.75 must be 15-25

Average Moisture Content: %

Dry: 21.58

21.58 Must be 18-28

002- Appendix B- Data and Calculation Forms (page 25 of 39)

13.01.2010	13.01.2010	11:57:03											
13.01.2010		11:57:03	COM1: SBI_1: U230015606	Measure	C1: CO	0.7 %	C2: CO2	3.72 %	C3: CO	788 vpm	C4: O2	11.5 %	
13.01.2010		12:07:03	COM1: SBI_1: U230015606	Measure	C1: CO	0.5 %	C2: CO2	5.23 %	C3: CO	788 vpm	C4: O2	14.9 %	
13.01.2010		12:17:03	COM1: SBI_1: U230015606	Measure	C1: CO	0.5 %	C2: CO2	5.42 %	C3: CO	788 vpm	C4: O2	14.6 %	
13.01.2010		12:27:03	COM1: SBI_1: U230015606	Measure	C1: CO	0.7 %	C2: CO2	4.59 %	C3: CO	788 vpm	C4: O2	15.3 %	
13.01.2010		12:37:03	COM1: SBI_1: U230015606	Measure	C1: CO	0.4 %	C2: CO2	7.54 %	C3: CO	788 vpm	C4: O2	13.2 %	
13.01.2010		12:47:03	COM1: SBI_1: U230015606	Measure	C1: CO	0.3 %	C2: CO2	10.4 %	C3: CO	788 vpm	C4: O2	9.89 %	
13.01.2010		12:57:03	COM1: SBI_1: U230015606	Measure	C1: CO	0.3 %	C2: CO2	8.01 %	C3: CO	788 vpm	C4: O2	12.4 %	
13.01.2010		13:07:03	COM1: SBI_1: U230015606	Measure	C1: CO	0.3 %	C2: CO2	8.69 %	C3: CO	788 vpm	C4: O2	11.8 %	
13.01.2010		13:17:03	COM1: SBI_1: U230015606	Measure	C1: CO	0.4 %	C2: CO2	9.3 %	C3: CO	788 vpm	C4: O2	11.1 %	
13.01.2010		13:27:03	COM1: SBI_1: U230015606	Measure	C1: CO	0.3 %	C2: CO2	9.41 %	C3: CO	788 vpm	C4: O2	11.1 %	
13.01.2010		13:37:03	COM1: SBI_1: U230015606	Measure	C1: CO	0.4 %	C2: CO2	8.21 %	C3: CO	788 vpm	C4: O2	12.2 %	
13.01.2010		13:47:03	COM1: SBI_1: U230015606	Measure	C1: CO	0.3 %	C2: CO2	8.59 %	C3: CO	788 vpm	C4: O2	11.9 %	
13.01.2010		13:57:03	COM1: SBI_1: U230015606	Measure	C1: CO	0.3 %	C2: CO2	8.67 %	C3: CO	788 vpm	C4: O2	11.9 %	
13.01.2010		14:07:03	COM1: SBI_1: U230015606	Measure	C1: CO	0.3 %	C2: CO2	9.18 %	C3: CO	788 vpm	C4: O2	11.4 %	
13.01.2010		14:17:03	COM1: SBI_1: U230015606	Measure	C1: CO	0.2 %	C2: CO2	10.1 %	C3: CO	788 vpm	C4: O2	10.8 %	
13.01.2010		14:27:03	COM1: SBI_1: U230015606	Measure	C1: CO	0.3 %	C2: CO2	10.3 %	C3: CO	788 vpm	C4: O2	10.3 %	
13.01.2010		14:37:03	COM1: SBI_1: U230015606	Measure	C1: CO	0.3 %	C2: CO2	9.94 %	C3: CO	788 vpm	C4: O2	10.6 %	
13.01.2010		14:47:03	COM1: SBI_1: U230015606	Measure	C1: CO	0.2 %	C2: CO2	10.1 %	C3: CO	788 vpm	C4: O2	10.5 %	
13.01.2010		14:57:03	COM1: SBI_1: U230015606	Measure	C1: CO	0.2 %	C2: CO2	9.88 %	C3: CO	788 vpm	C4: O2	10.6 %	
13.01.2010		15:07:03	COM1: SBI_1: U230015606	Measure	C1: CO	0.2 %	C2: CO2	9.93 %	C3: CO	788 vpm	C4: O2	10.6 %	
13.01.2010		15:17:03	COM1: SBI_1: U230015606	Measure	C1: CO	0.2 %	C2: CO2	9.79 %	C3: CO	788 vpm	C4: O2	10.5 %	
13.01.2010		15:27:03	COM1: SBI_1: U230015606	Measure	C1: CO	0.2 %	C2: CO2	8.9 %	C3: CO	447 vpm	C4: O2	11.5 %	
13.01.2010		15:37:03	COM1: SBI_1: U230015606	Measure	C1: CO	0.2 %	C2: CO2	7.03 %	C3: CO	788 vpm	C4: O2	13.1 %	
13.01.2010		15:47:03	COM1: SBI_1: U230015606	Measure	C1: CO	0.3 %	C2: CO2	6.52 %	C3: CO	788 vpm	C4: O2	13.5 %	
13.01.2010		15:57:03	COM1: SBI_1: U230015606	Measure	C1: CO	0.5 %	C2: CO2	4.57 %	C3: CO	788 vpm	C4: O2	15.3 %	
13.01.2010		16:07:03	COM1: SBI_1: U230015606	Measure	C1: CO	0.9 %	C2: CO2	4.48 %	C3: CO	900 vpm	C4: O2	15 %	
13.01.2010		16:17:03	COM1: SBI_1: U230015606	Measure	C1: CO	1.2 %	C2: CO2	4.06 %	C3: CO	900 vpm	C4: O2	15.4 %	
13.01.2010		16:27:03	COM1: SBI_1: U230015606	Measure	C1: CO	1.3 %	C2: CO2	4.41 %	C3: CO	900 vpm	C4: O2	14.9 %	
13.01.2010		16:37:03	COM1: SBI_1: U230015606	Measure	C1: CO	1.2 %	C2: CO2	4.81 %	C3: CO	900 vpm	C4: O2	14.6 %	
13.01.2010		16:47:03	COM1: SBI_1: U230015606	Measure	C1: CO	1.3 %	C2: CO2	4.73 %	C3: CO	900 vpm	C4: O2	14.6 %	
13.01.2010		16:57:03	COM1: SBI_1: U230015606	Measure	C1: CO	1.4 %	C2: CO2	4.85 %	C3: CO	900 vpm	C4: O2	14.5 %	
13.01.2010		17:07:03	COM1: SBI_1: U230015606	Measure	C1: CO	1.6 %	C2: CO2	4.93 %	C3: CO	900 vpm	C4: O2	14.5 %	
13.01.2010		17:17:03	COM1: SBI_1: U230015606	Measure	C1: CO	1.1 %	C2: CO2	4.31 %	C3: CO	900 vpm	C4: O2	14.7 %	

002- Appendix B- Data and Calculation Forms (page 26 of 39)

13.01.2010	17:27:03	COM1: SBI_1: U230015606	Measure	C1: CO	1 %	C2: CO2	4.63 %	C3: CO	900 vpm	C4: O2	14.4 %
13.01.2010	17:37:03	COM1: SBI_1: U230015606	Measure	C1: CO	1 %	C2: CO2	4.71 %	C3: CO	900 vpm	C4: O2	14.4 %
13.01.2010	17:47:03	COM1: SBI_1: U230015606	Measure	C1: CO	0.9 %	C2: CO2	4.63 %	C3: CO	900 vpm	C4: O2	14.6 %
13.01.2010	17:57:03	COM1: SBI_1: U230015606	Measure	C1: CO	0.9 %	C2: CO2	4.71 %	C3: CO	900 vpm	C4: O2	14.6 %
13.01.2010	18:07:03	COM1: SBI_1: U230015606	Measure	C1: CO	0.9 %	C2: CO2	4.81 %	C3: CO	900 vpm	C4: O2	14.6 %
13.01.2010	18:17:03	COM1: SBI_1: U230015606	Measure	C1: CO	0.9 %	C2: CO2	4.9 %	C3: CO	900 vpm	C4: O2	14.6 %
13.01.2010	18:27:03	COM1: SBI_1: U230015606	Measure	C1: CO	0.8 %	C2: CO2	4.73 %	C3: CO	900 vpm	C4: O2	14.8 %
13.01.2010	18:37:03	COM1: SBI_1: U230015606	Measure	C1: CO	0.8 %	C2: CO2	4.74 %	C3: CO	900 vpm	C4: O2	14.7 %
13.01.2010	18:47:03	COM1: SBI_1: U230015606	Measure	C1: CO	0.8 %	C2: CO2	4.46 %	C3: CO	900 vpm	C4: O2	14.8 %
13.01.2010	18:57:03	COM1: SBI_1: U230015606	Measure	C1: CO	0.8 %	C2: CO2	4.58 %	C3: CO	900 vpm	C4: O2	15 %
13.01.2010	19:07:03	COM1: SBI_1: U230015606	Measure	C1: CO	0.8 %	C2: CO2	4.54 %	C3: CO	788 vpm	C4: O2	15 %
13.01.2010	19:17:03	COM1: SBI_1: U230015606	Measure	C1: CO	0.7 %	C2: CO2	4.5 %	C3: CO	788 vpm	C4: O2	15.1 %
13.01.2010	19:27:03	COM1: SBI_1: U230015606	Measure	C1: CO	0.7 %	C2: CO2	4.25 %	C3: CO	788 vpm	C4: O2	15.3 %
13.01.2010	19:37:03	COM1: SBI_1: U230015606	Measure	C1: CO	0.7 %	C2: CO2	4.22 %	C3: CO	788 vpm	C4: O2	15.4 %
13.01.2010	19:47:03	COM1: SBI_1: U230015606	Measure	C1: CO	0.7 %	C2: CO2	4.29 %	C3: CO	788 vpm	C4: O2	15.5 %
13.01.2010	19:57:03	COM1: SBI_1: U230015606	Measure	C1: CO	0.7 %	C2: CO2	4.36 %	C3: CO	788 vpm	C4: O2	15.3 %
13.01.2010	20:07:03	COM1: SBI_1: U230015606	Measure	C1: CO	0.7 %	C2: CO2	4.25 %	C3: CO	788 vpm	C4: O2	15.3 %
13.01.2010	20:17:03	COM1: SBI_1: U230015606	Measure	C1: CO	0.6 %	C2: CO2	4.14 %	C3: CO	788 vpm	C4: O2	15.6 %
13.01.2010	20:27:03	COM1: SBI_1: U230015606	Measure	C1: CO	0.7 %	C2: CO2	4.35 %	C3: CO	788 vpm	C4: O2	15.4 %
13.01.2010	20:37:03	COM1: SBI_1: U230015606	Measure	C1: CO	0.7 %	C2: CO2	4.01 %	C3: CO	788 vpm	C4: O2	15.6 %
13.01.2010	20:47:03	COM1: SBI_1: U230015606	Measure	C1: CO	0.6 %	C2: CO2	4.07 %	C3: CO	788 vpm	C4: O2	15.8 %
13.01.2010	20:57:03	COM1: SBI_1: U230015606	Measure	C1: CO	0.6 %	C2: CO2	4.11 %	C3: CO	788 vpm	C4: O2	15.7 %
13.01.2010	21:07:03	COM1: SBI_1: U230015606	Measure	C1: CO	0.6 %	C2: CO2	3.73 %	C3: CO	788 vpm	C4: O2	16 %
13.01.2010	21:17:03	COM1: SBI_1: U230015606	Measure	C1: CO	0.6 %	C2: CO2	3.69 %	C3: CO	788 vpm	C4: O2	16.2 %
13.01.2010	21:27:03	COM1: SBI_1: U230015606	Measure	C1: CO	0.6 %	C2: CO2	3.73 %	C3: CO	788 vpm	C4: O2	16 %
13.01.2010	21:37:03	COM1: SBI_1: U230015606	Measure	C1: CO	0.6 %	C2: CO2	3.72 %	C3: CO	788 vpm	C4: O2	16.3 %
13.01.2010	21:47:03	COM1: SBI_1: U230015606	Measure	C1: CO	0.6 %	C2: CO2	3.71 %	C3: CO	788 vpm	C4: O2	16.1 %
13.01.2010	21:57:03	COM1: SBI_1: U230015606	Measure	C1: CO	0.6 %	C2: CO2	3.71 %	C3: CO	788 vpm	C4: O2	16.2 %
13.01.2010	22:07:03	COM1: SBI_1: U230015606	Measure	C1: CO	0.6 %	C2: CO2	3.67 %	C3: CO	788 vpm	C4: O2	16.1 %
13.01.2010	22:17:03	COM1: SBI_1: U230015606	Measure	C1: CO	0.6 %	C2: CO2	3.7 %	C3: CO	788 vpm	C4: O2	16.3 %
13.01.2010	22:27:03	COM1: SBI_1: U230015606	Measure	C1: CO	0.5 %	C2: CO2	3.44 %	C3: CO	788 vpm	C4: O2	16.4 %
13.01.2010	22:37:03	COM1: SBI_1: U230015606	Measure	C1: CO	0.6 %	C2: CO2	3.63 %	C3: CO	788 vpm	C4: O2	16.2 %
13.01.2010	22:47:03	COM1: SBI_1: U230015606	Measure	C1: CO	0.6 %	C2: CO2	3.59 %	C3: CO	788 vpm	C4: O2	16.5 %
13.01.2010	22:57:03	COM1: SBI_1: U230015606	Measure	C1: CO	0.5 %	C2: CO2	3.45 %	C3: CO	788 vpm	C4: O2	16.4 %

002- Appendix B- Data and Calculation Forms (page 27 of 39)

13.01.2010	23:07:03	COM1: SBI_1: U230015606	Measure	C1: CO	0.6 %	C2: CO2	3.46 %	C3: CO	788 vpm	C4: O2	16.4 %
13.01.2010	23:17:03	COM1: SBI_1: U230015606	Measure	C1: CO	0.6 %	C2: CO2	3.4 %	C3: CO	788 vpm	C4: O2	16.7 %
13.01.2010	23:27:03	COM1: SBI_1: U230015606	Measure	C1: CO	0.6 %	C2: CO2	3.2 %	C3: CO	788 vpm	C4: O2	16.7 %
13.01.2010	23:37:03	COM1: SBI_1: U230015606	Measure	C1: CO	0.6 %	C2: CO2	3.26 %	C3: CO	788 vpm	C4: O2	16.6 %
13.01.2010	23:47:03	COM1: SBI_1: U230015606	Measure	C1: CO	0.6 %	C2: CO2	3.37 %	C3: CO	788 vpm	C4: O2	16.6 %
13.01.2010	23:57:03	COM1: SBI_1: U230015606	Measure	C1: CO	0.6 %	C2: CO2	3.29 %	C3: CO	788 vpm	C4: O2	16.8 %
14.01.2010	00:07:03	COM1: SBI_1: U230015606	Measure	C1: CO	0.6 %	C2: CO2	3.23 %	C3: CO	788 vpm	C4: O2	16.7 %
14.01.2010	00:17:03	COM1: SBI_1: U230015606	Measure	C1: CO	0.6 %	C2: CO2	3.36 %	C3: CO	788 vpm	C4: O2	16.6 %
14.01.2010	00:27:03	COM1: SBI_1: U230015606	Measure	C1: CO	0.6 %	C2: CO2	3.4 %	C3: CO	788 vpm	C4: O2	16.6 %
14.01.2010	00:37:03	COM1: SBI_1: U230015606	Measure	C1: CO	0.6 %	C2: CO2	3.3 %	C3: CO	788 vpm	C4: O2	16.6 %
14.01.2010	00:47:03	COM1: SBI_1: U230015606	Measure	C1: CO	0.6 %	C2: CO2	3.28 %	C3: CO	788 vpm	C4: O2	16.6 %
14.01.2010	00:57:03	COM1: SBI_1: U230015606	Measure	C1: CO	0.6 %	C2: CO2	3.34 %	C3: CO	788 vpm	C4: O2	16.8 %
14.01.2010	01:07:03	COM1: SBI_1: U230015606	Measure	C1: CO	0.6 %	C2: CO2	3.27 %	C3: CO	788 vpm	C4: O2	16.8 %
14.01.2010	01:17:03	COM1: SBI_1: U230015606	Measure	C1: CO	0.6 %	C2: CO2	3.12 %	C3: CO	788 vpm	C4: O2	16.8 %
14.01.2010	01:27:03	COM1: SBI_1: U230015606	Measure	C1: CO	0.6 %	C2: CO2	3.24 %	C3: CO	788 vpm	C4: O2	16.7 %
14.01.2010	01:37:03	COM1: SBI_1: U230015606	Measure	C1: CO	0.6 %	C2: CO2	3.21 %	C3: CO	788 vpm	C4: O2	16.9 %
14.01.2010	01:47:03	COM1: SBI_1: U230015606	Measure	C1: CO	0.6 %	C2: CO2	3.11 %	C3: CO	788 vpm	C4: O2	16.9 %
14.01.2010	01:57:03	COM1: SBI_1: U230015606	Measure	C1: CO	0.6 %	C2: CO2	3.12 %	C3: CO	788 vpm	C4: O2	16.9 %
14.01.2010	02:07:03	COM1: SBI_1: U230015606	Measure	C1: CO	0.6 %	C2: CO2	3.18 %	C3: CO	788 vpm	C4: O2	16.9 %
14.01.2010	02:17:03	COM1: SBI_1: U230015606	Measure	C1: CO	0.6 %	C2: CO2	3.03 %	C3: CO	788 vpm	C4: O2	17.2 %
14.01.2010	02:27:03	COM1: SBI_1: U230015606	Measure	C1: CO	0.5 %	C2: CO2	2.94 %	C3: CO	788 vpm	C4: O2	17.1 %
14.01.2010	02:37:03	COM1: SBI_1: U230015606	Measure	C1: CO	0.5 %	C2: CO2	2.97 %	C3: CO	788 vpm	C4: O2	17.1 %
14.01.2010	02:47:03	COM1: SBI_1: U230015606	Measure	C1: CO	0.5 %	C2: CO2	2.99 %	C3: CO	788 vpm	C4: O2	17.3 %
14.01.2010	02:57:03	COM1: SBI_1: U230015606	Measure	C1: CO	0.5 %	C2: CO2	2.88 %	C3: CO	788 vpm	C4: O2	17.4 %
14.01.2010	03:07:03	COM1: SBI_1: U230015606	Measure	C1: CO	0.5 %	C2: CO2	2.79 %	C3: CO	788 vpm	C4: O2	17.4 %
14.01.2010	03:17:03	COM1: SBI_1: U230015606	Measure	C1: CO	0.5 %	C2: CO2	2.74 %	C3: CO	788 vpm	C4: O2	17.4 %
14.01.2010	03:27:03	COM1: SBI_1: U230015606	Measure	C1: CO	0.5 %	C2: CO2	2.65 %	C3: CO	788 vpm	C4: O2	17.5 %
14.01.2010	03:37:03	COM1: SBI_1: U230015606	Measure	C1: CO	0.5 %	C2: CO2	2.61 %	C3: CO	788 vpm	C4: O2	17.5 %
14.01.2010	03:47:03	COM1: SBI_1: U230015606	Measure	C1: CO	0.5 %	C2: CO2	2.6 %	C3: CO	788 vpm	C4: O2	17.5 %
14.01.2010	03:57:03	COM1: SBI_1: U230015606	Measure	C1: CO	0.5 %	C2: CO2	2.53 %	C3: CO	788 vpm	C4: O2	17.7 %
14.01.2010	04:07:03	COM1: SBI_1: U230015606	Measure	C1: CO	0.5 %	C2: CO2	2.47 %	C3: CO	788 vpm	C4: O2	17.8 %
14.01.2010	04:17:03	COM1: SBI_1: U230015606	Measure	C1: CO	0.5 %	C2: CO2	2.39 %	C3: CO	788 vpm	C4: O2	17.9 %
14.01.2010	04:27:03	COM1: SBI_1: U230015606	Measure	C1: CO	0.5 %	C2: CO2	2.32 %	C3: CO	788 vpm	C4: O2	17.9 %
14.01.2010	04:37:03	COM1: SBI_1: U230015606	Measure	C1: CO	0.4 %	C2: CO2	2.26 %	C3: CO	788 vpm	C4: O2	18 %

002- Appendix B- Data and Calculation Forms (page 28 of 39)

14.01.2010	04:47:03	COM1: SBI_1: U230015606	Measure	C1: CO	0.5 %	C2: CO2	2.26 %	C3: CO	788 vpm	C4: O2	18 %
14.01.2010	04:57:03	COM1: SBI_1: U230015606	Measure	C1: CO	0.4 %	C2: CO2	2.16 %	C3: CO	788 vpm	C4: O2	18.1 %
14.01.2010	05:07:03	COM1: SBI_1: U230015606	Measure	C1: CO	0.4 %	C2: CO2	2.05 %	C3: CO	788 vpm	C4: O2	18.2 %
14.01.2010	05:17:03	COM1: SBI_1: U230015606	Measure	C1: CO	0.4 %	C2: CO2	2.05 %	C3: CO	788 vpm	C4: O2	18.3 %
14.01.2010	05:27:03	COM1: SBI_1: U230015606	Measure	C1: CO	0.4 %	C2: CO2	1.99 %	C3: CO	788 vpm	C4: O2	18.5 %
14.01.2010	05:37:03	COM1: SBI_1: U230015606	Measure	C1: CO	0.4 %	C2: CO2	1.9 %	C3: CO	788 vpm	C4: O2	18.5 %
14.01.2010	05:47:03	COM1: SBI_1: U230015606	Measure	C1: CO	0.4 %	C2: CO2	1.85 %	C3: CO	788 vpm	C4: O2	18.5 %
14.01.2010	05:57:03	COM1: SBI_1: U230015606	Measure	C1: CO	0.4 %	C2: CO2	1.87 %	C3: CO	788 vpm	C4: O2	18.5 %
14.01.2010	06:07:03	COM1: SBI_1: U230015606	Measure	C1: CO	0.4 %	C2: CO2	1.9 %	C3: CO	788 vpm	C4: O2	18.6 %
14.01.2010	06:17:03	COM1: SBI_1: U230015606	Measure	C1: CO	0.4 %	C2: CO2	1.82 %	C3: CO	788 vpm	C4: O2	18.6 %
14.01.2010	06:27:03	COM1: SBI_1: U230015606	Measure	C1: CO	0.4 %	C2: CO2	1.83 %	C3: CO	788 vpm	C4: O2	18.5 %
14.01.2010	14.01.2010 06:36:00										

002- Appendix B- Data and Calculation Forms (page 29 of 39)

Données brutes du Multiscan

DATE: 13-01-10 **Test :** 2

	Top	Back	R.Side	L.Side	Bottom	Flue	Ambiant	Tunnel	DGM 1 in	DGM 1 out	Filter #1	DGM 2 in	DGM 2 out	Filter #2	Pitot	Air Return	Average	
Mean	227.5	184.4	193.0	199.0	216.3	152.5	81.7	95.1	76.9	77.1	-392.3	77.4	77.3	-440.3	99.3	78.5		
MAXIMUM	488.3	253.0	291.0	304.3	380.8	459.5	88.2	229.3	80.1	80.1	84.6	80.4	80.2	82.0	128.5	82.8		
MINIMUM	142.5	123.1	145.6	153.5	180.3	104.0	73.8	77.0	70.3	70.2	-5866.1	69.6	69.6	-5866.1	87.1	70.3		
Time (min)	(°F)	(°F)	(°F)	(°F)	(°F)	(°F)	(°F)	(°F)	(°F)	(°F)	(°F)	(°F)	(°F)	(°F)	(°F)	(°F)		
	1	2	3	4	5	6	7	8	9	10	11	12	13	14	15	16		
0	463.46	123.08	159.98	157.64	257.9	446.54	77.72	217.76	70.34	70.16	######	69.62	69.62	######	115.16	74.84	232.4	
10	483.62	138.02	181.94	176.36	249.8	446.72	79.7	218.66	71.6	71.6	######	70.7	70.7	######	119.66	77.36	245.9	
20	480.38	152.24	206.24	200.12	243.86	459.5	79.88	228.2	72.68	72.86	######	71.96	71.78	######	124.16	78.98	256.6	
30	479.48	169.88	230.72	225.14	245.48	459.32	81.68	229.28	73.76	73.94	######	73.22	73.04	######	126.86	79.88	270.1	
40	488.3	194.54	254.48	249.26	258.08	454.46	86.18	224.6	74.84	74.66	######	74.12	74.3	######	128.48	80.78	288.9	
50	460.4	214.34	274.28	271.76	280.94	424.58	88.16	213.26	75.56	75.56	######	75.2	75.2	######	126.68	79.88	300.3	
60	469.22	234.86	288.14	294.44	347.36	306.32	85.1	139.28	76.28	76.46	######	76.1	76.1	######	123.8	80.96	326.8	
70	371.84	253.04	291.02	304.34	376.7	211.28	85.82	108.14	76.82	76.82	######	76.64	76.64	######	114.8	81.5	319.4	
80	297.86	251.42	275.0	288.14	380.84	175.82	83.3	98.96	77.0	77.18	######	77.18	77.0	######	108.68	80.6	298.7	
90	267.98	242.06	254.3	267.26	380.66	163.22	83.12	95.72	77.0	77.18	######	77.18	77.18	######	105.26	80.6	282.5	
100	240.62	230.0	235.94	248.72	377.06	151.34	83.48	92.66	77.36	77.18	77.9	77.54	77.54	######	102.56	80.24	266.5	
110	221.9	217.4	220.1	231.8	370.4	142.7	84.02	92.12	77.36	77.36	79.34	77.72	77.54	77.9	100.4	80.24	252.3	
120	201.38	205.88	207.68	218.12	364.64	131.54	83.84	89.96	77.54	77.54	80.24	77.9	77.72	78.44	98.24	80.78	239.5	
130	185.9	196.16	197.24	204.62	359.06	123.62	83.48	88.16	77.72	77.9	80.42	77.9	77.9	78.8	96.44	80.06	228.6	
140	182.3	193.28	195.98	201.74	358.34	162.68	84.2	98.24	77.72	77.9	80.6	78.08	77.9	78.8	96.62	80.06	226.3	Start
150	266.36	189.32	193.28	195.08	354.56	198.86	84.56	112.28	78.08	77.9	81.86	78.08	78.08	80.6	102.56	80.78	239.7	
160	246.74	180.86	176.18	181.22	339.8	172.4	83.84	100.22	78.08	78.08	82.4	78.44	78.26	81.5	99.68	80.6	225.0	
170	255.2	168.8	161.96	169.16	320.18	171.68	83.66	99.14	78.08	78.08	81.68	78.62	78.26	80.42	98.96	80.78	215.1	
180	242.06	159.62	151.7	159.98	300.56	163.04	84.02	96.98	78.26	78.26	80.78	78.62	78.26	79.16	97.52	80.78	202.8	
190	284.0	151.88	145.58	154.22	282.74	202.64	84.02	104.36	78.08	78.26	81.14	78.62	78.44	79.34	100.76	80.6	203.7	
200	387.68	143.96	149.0	159.26	267.26	234.5	83.84	111.02	78.08	78.26	82.22	78.62	78.44	80.96	107.42	80.78	221.4	
210	378.5	144.32	156.92	170.06	254.3	221.0	84.38	107.24	78.44	78.44	82.58	78.8	78.44	81.68	107.06	81.5	220.8	
220	371.84	142.52	159.98	173.84	243.14	221.9	84.2	106.34	78.44	78.44	82.58	78.62	78.62	81.68	106.52	80.24	218.3	
230	372.38	142.52	164.66	180.68	233.6	225.68	84.38	106.52	78.8	78.8	82.4	78.98	78.62	81.5	107.96	81.32	218.8	
240	375.8	143.42	174.56	192.92	225.32	222.8	83.84	105.98	78.44	78.62	82.22	78.98	78.8	81.32	107.96	81.32	222.4	
250	364.46	144.86	184.1	202.46	218.12	212.72	85.46	104.0	78.62	78.44	81.5	79.16	78.8	80.6	107.24	81.14	222.8	
260	356.54	145.76	189.14	206.6	211.28	212.72	86.18	103.82	78.98	78.62	82.04	79.34	79.16	80.24	107.24	81.68	221.9	
270	355.64	147.38	194.18	210.74	205.34	212.0	86.0	104.18	79.16	78.98	82.58	79.52	79.34	80.06	107.24	81.5	222.7	
280	364.82	149.0	199.58	215.42	200.3	216.14	86.54	104.9	79.34	79.34	82.94	79.88	79.34	80.24	107.96	82.04	225.8	

DROLET POÊLES FOYERS
Fichier: Cert_B415_2010-01-13
Onglet: Sheet1

page 1 de 1

imprimé le: 2016-09-06

002- Appendix B- Data and Calculation Forms (page 30 of 39)

Données brutes du Multiscan

Mean	227.5	184.4	193.0	199.0	216.3	152.5	81.7	95.1	76.9	77.1	-392.3	77.4	77.3	-440.3	99.3	78.5		
MAXIMUM	488.3	253.0	291.0	304.3	380.8	459.5	88.2	229.3	80.1	80.1	84.6	80.4	80.2	82.0	128.5	82.8		
MINIMUM	142.5	123.1	145.6	153.5	180.3	104.0	73.8	77.0	70.3	70.2	-5866.1	69.6	69.6	-5866.1	87.1	70.3		
Time (min)	Top	Back	R.Side	L.Side	Bottom	Flue	Ambiant	Tunnel	DGM 1 in	DGM 1 out	Filter #1	DGM 2 in	DGM 2 out	Filter #2	Pitot	Air Return	Average	
	(°F)	(°F)	(°F)	(°F)	(°F)	(°F)	(°F)	(°F)	(°F)	(°F)	(°F)	(°F)	(°F)	(°F)	(°F)	(°F)		
290	377.24	150.98	205.52	221.18	195.44	224.24	86.54	105.62	79.52	79.34	83.66	80.06	79.52	80.78	109.58	82.22	230.1	
300	397.58	153.68	212.18	228.02	191.48	228.56	86.0	107.06	79.52	79.52	83.66	80.06	79.7	80.96	111.56	81.86	236.6	
310	412.7	156.56	217.76	234.68	188.06	225.68	86.54	107.06	79.52	79.7	83.84	80.06	79.7	80.96	112.28	81.86	242.0	
320	410.0	159.8	222.44	240.98	185.18	225.14	84.38	107.24	79.7	79.7	84.2	80.06	79.88	80.78	111.92	81.14	243.7	
330	403.34	163.04	225.32	245.48	182.84	222.26	86.54	106.7	79.88	79.88	84.38	80.42	80.06	81.14	112.46	82.22	244.0	
340	393.44	165.38	228.2	249.8	181.22	221.18	85.1	106.16	80.06	80.06	84.56	80.42	80.24	80.78	112.28	82.76	243.6	
350	394.52	168.44	230.18	254.48	180.68	218.84	86.18	105.62	79.7	79.88	84.56	80.24	80.06	80.78	111.92	81.86	245.7	
360	375.44	171.86	232.16	257.54	180.32	206.42	86.72	103.28	79.34	79.7	84.38	80.24	80.06	80.96	110.48	81.14	243.5	
370	334.04	176.36	231.8	257.9	180.5	187.52	86.9	99.32	79.52	79.88	83.84	80.24	80.24	81.32	107.42	81.32	236.1	
380	302.9	178.34	229.1	254.12	181.04	176.36	86.18	96.62	79.34	79.7	83.66	80.06	80.06	81.86	105.26	81.68	229.1	
390	263.12	178.88	223.34	246.56	181.94	153.86	86.36	93.38	79.34	79.52	83.66	80.24	80.06	82.04	102.02	81.86	218.8	
400	233.06	177.26	212.36	233.78	182.66	141.62	85.64	91.04	79.34	79.7	83.3	80.06	79.88	82.04	99.68	82.58	207.8	
410	212.72	174.38	202.1	222.26	183.74	135.14	86.0	90.14	79.7	79.7	82.94	80.24	79.88	82.04	97.7	82.76	199.0	
420	197.24	171.14	194.36	213.44	185.36	130.46	84.2	89.06	79.7	79.7	82.94	80.24	80.06	82.04	96.26	81.68	192.3	
430	190.22	169.16	189.14	206.42	186.98	127.58	84.74	89.24	79.7	79.7	82.94	80.24	80.06	81.86	95.72	82.4	188.4	
440	184.1	167.36	186.44	201.92	188.6	125.6	85.64	88.88	79.88	79.88	83.12	80.42	80.06	81.86	95.36	82.4	185.7	
450	178.34	166.28	184.64	198.14	190.58	124.52	85.1	87.98	79.88	79.88	82.58	80.42	80.06	81.86	94.82	81.68	183.6	
460	179.6	165.38	183.74	195.08	192.74	125.24	84.38	87.62	79.52	79.52	82.58	80.06	80.06	81.68	94.46	81.32	183.3	
470	183.92	171.86	194.0	205.16	195.44	123.44	83.84	86.9	78.8	79.16	81.86	79.7	79.7	81.5	95.72	81.14	190.1	
480	185.18	177.08	198.86	208.76	197.78	122.18	83.84	86.72	78.62	78.98	81.86	79.34	79.52	80.96	96.26	80.42	193.5	
490	193.82	184.1	205.52	214.16	200.3	121.1	83.66	86.36	78.44	78.8	81.5	79.34	79.34	80.78	97.7	79.88	199.6	
500	174.56	170.78	185.72	193.28	202.64	115.88	84.2	86.36	78.98	79.16	81.68	79.52	79.34	80.6	94.46	81.32	185.4	
510	173.48	172.4	184.64	192.2	204.98	115.88	84.38	86.36	78.8	78.98	81.5	79.52	79.16	80.78	94.28	80.96	185.5	
520	173.48	174.74	185.18	192.2	207.32	116.42	83.3	86.0	78.8	78.98	81.5	79.34	79.34	80.78	94.28	81.14	186.6	
530	173.66	177.44	186.8	193.64	209.12	117.5	83.66	86.18	78.98	78.98	81.68	79.52	79.34	80.78	94.64	81.5	188.1	
540	174.56	179.96	187.34	195.26	210.92	116.78	84.2	86.0	78.98	79.16	81.5	79.52	79.34	80.78	94.82	81.68	189.6	
550	175.28	182.48	186.98	196.7	212.36	116.78	84.2	85.82	79.16	79.16	81.5	79.52	79.34	80.96	94.82	81.32	190.8	
560	178.7	190.04	192.56	203.18	212.9	118.04	83.84	85.82	79.16	79.16	81.5	79.7	79.34	80.78	95.9	81.14	195.5	
570	184.82	193.64	195.08	204.44	213.08	114.26	82.22	85.28	78.98	79.16	81.5	79.52	79.34	81.14	99.32	79.88	198.2	
580	189.5	200.12	202.1	210.56	214.16	116.24	83.3	85.1	78.8	78.98	81.32	79.34	79.52	80.96	100.58	79.88	203.3	
590	181.22	197.42	195.08	204.44	213.62	116.6	83.12	85.28	78.44	78.62	81.14	78.98	79.16	80.78	96.08	79.52	198.4	
600	170.78	189.5	187.52	196.34	213.44	116.42	83.3	85.28	78.44	78.8	80.96	78.98	78.98	80.6	94.82	80.42	191.5	
610	169.7	187.7	184.46	192.74	212.9	115.34	83.3	85.28	78.44	78.62	80.96	78.98	78.98	80.24	94.28	80.42	189.5	
620	165.92	185.0	179.42	187.16	212.0	113.9	83.12	85.1	78.44	78.62	80.96	78.98	78.8	80.24	93.38	80.06	185.9	
630	181.04	195.44	193.28	199.04	211.28	113.54	82.4	84.74	78.44	78.44	80.78	78.98	78.98	80.24	98.96	79.52	196.0	
640	173.3	193.1	189.14	196.88	210.92	115.88	82.76	84.38	78.44	78.62	80.78	79.16	78.98	80.24	95.18	80.42	192.7	
650	167.72	186.08	179.96	188.24	210.74	113.54	83.12	84.74	78.44	78.44	80.6	78.98	78.8	80.06	93.38	80.06	186.5	
660	183.92	198.86	195.44	201.74	209.66	113.9	82.22	84.56	78.44	78.44	80.42	78.8	78.8	79.7	99.5	78.62	197.9	

DROLET POÊLES FOYERS
Fichier: Cert_B415_2010-01-13
Onglet: Sheet1

page 1 de 1

imprimé le: 2016-09-06

002- Appendix B- Data and Calculation Forms (page 31 of 39)

Données brutes du Multiscan

Mean	227.5	184.4	193.0	199.0	216.3	152.5	81.7	95.1	76.9	77.1	-392.3	77.4	77.3	-440.3	99.3	78.5		
MAXIMUM	488.3	253.0	291.0	304.3	380.8	459.5	88.2	229.3	80.1	80.1	84.6	80.4	80.2	82.0	128.5	82.8		
MINIMUM	142.5	123.1	145.6	153.5	180.3	104.0	73.8	77.0	70.3	70.2	-5866.1	69.6	69.6	-5866.1	87.1	70.3		
Time (min)	Top	Back	R.Side	L.Side	Bottom	Flue	Ambiant	Tunnel	DGM 1 in	DGM 1 out	Filter #1	DGM 2 in	DGM 2 out	Filter #2	Pitot	Air Return	Average	
	(°F)	(°F)	(°F)	(°F)	(°F)	(°F)	(°F)	(°F)	(°F)	(°F)	(°F)	(°F)	(°F)	(°F)	(°F)	(°F)		
670	170.78	191.12	185.36	193.64	208.94	115.34	82.4	84.74	78.44	78.26	80.42	78.8	78.8	79.88	94.46	79.88	190.0	
680	166.46	185.36	177.26	185.9	208.22	112.64	82.76	84.38	78.44	78.44	80.24	78.8	78.8	79.88	93.2	80.24	184.6	
690	183.2	199.58	194.54	200.66	206.6	113.54	82.04	84.2	78.26	78.26	80.24	78.62	78.8	79.7	99.5	78.44	196.9	
700	167.72	190.04	182.48	190.22	205.88	114.08	82.76	84.2	78.26	78.26	80.24	78.62	78.8	79.88	93.92	79.88	187.3	
710	174.02	194.72	186.26	194.0	204.8	111.74	81.32	84.02	78.26	78.26	80.24	78.8	78.62	79.88	97.52	78.62	190.8	
720	167.36	194.0	182.84	192.74	203.36	113.72	81.68	83.84	78.26	78.26	80.06	78.62	78.62	79.88	94.28	79.7	188.1	
730	170.24	193.1	181.4	191.66	202.64	111.56	81.14	83.84	77.9	78.08	79.88	78.44	78.44	79.52	96.08	78.62	187.8	
740	165.56	193.46	180.32	192.38	201.38	113.54	81.68	83.84	77.9	78.26	79.7	78.44	78.44	79.52	94.1	79.52	186.6	
750	170.78	194.36	181.04	192.2	200.48	111.38	80.96	83.84	78.08	78.08	79.7	78.44	78.26	79.52	96.44	78.26	187.8	
760	164.48	193.28	178.52	191.3	199.58	113.36	81.32	83.84	77.9	78.08	79.7	78.44	78.44	79.52	93.56	79.34	185.4	
770	177.26	201.2	186.44	198.5	198.68	111.56	80.96	83.3	77.72	77.9	79.52	78.26	78.26	79.34	98.6	78.26	192.4	
780	161.78	190.04	173.12	186.44	198.32	112.1	81.86	83.66	77.54	77.72	79.52	78.26	78.08	79.16	92.48	78.62	181.9	
790	172.4	203.0	184.82	198.5	197.24	113.54	80.96	83.66	77.72	77.9	79.34	78.08	78.08	79.16	95.0	77.9	191.2	
800	171.14	196.52	179.96	193.1	197.06	111.56	80.6	83.66	77.54	77.72	79.52	77.9	77.9	78.98	96.8	77.0	187.6	
810	160.34	191.48	172.94	186.98	196.16	112.28	80.78	83.66	77.36	77.54	79.34	77.9	77.9	78.98	92.12	78.08	181.6	
820	171.86	203.0	183.56	196.88	195.8	113.72	80.42	83.12	77.36	77.54	78.98	77.54	77.72	78.8	94.28	77.72	190.2	
830	174.74	202.82	184.82	196.16	195.44	111.56	80.78	82.94	77.18	77.18	78.98	77.72	77.54	78.8	98.24	76.82	190.8	
840	159.44	192.2	170.96	182.66	195.08	111.02	80.78	83.12	77.18	77.18	78.8	77.54	77.54	78.44	91.76	78.62	180.1	
850	162.5	198.86	177.08	187.7	194.36	112.28	80.6	82.76	77.0	77.18	78.8	77.54	77.54	78.44	92.84	78.08	184.1	
860	175.1	210.02	187.34	196.34	193.82	111.02	79.88	82.58	76.82	77.18	78.8	77.36	77.36	78.26	98.96	76.28	192.5	
870	167.36	203.72	179.96	188.42	193.1	109.94	80.24	82.76	76.64	76.82	78.8	77.18	77.18	78.08	96.26	76.64	186.5	
880	157.46	198.14	171.5	180.86	192.56	110.66	80.42	82.58	76.64	76.82	78.44	77.18	77.0	78.08	91.58	77.9	180.1	
890	167.0	210.02	180.32	189.14	191.48	111.74	79.52	82.4	76.64	77.0	78.26	77.18	77.0	78.08	93.56	77.18	187.6	
900	170.78	211.28	182.84	189.86	190.76	109.94	79.88	82.22	76.64	76.82	78.44	77.0	77.18	77.9	97.52	76.82	189.1	
910	156.2	199.76	168.98	177.62	190.04	109.94	80.24	82.4	76.64	76.82	78.44	77.18	77.0	78.08	91.4	78.08	178.5	
920	162.5	210.2	177.62	185.36	189.14	111.74	79.7	82.22	76.46	76.64	78.26	76.82	76.82	77.9	92.48	77.18	185.0	
930	173.3	218.3	185.54	192.2	188.42	110.66	79.88	82.22	76.46	76.64	78.26	76.82	76.82	77.9	98.6	76.28	191.6	
940	163.04	209.12	176.54	183.38	187.7	109.22	80.24	82.58	76.64	76.82	78.44	76.82	76.82	77.72	95.18	76.28	184.0	
950	156.92	202.82	171.32	179.42	186.98	111.02	79.88	82.04	76.46	76.64	78.08	76.82	76.82	77.72	91.58	77.36	179.5	
960	170.6	211.46	184.64	191.48	186.26	112.1	79.52	81.86	76.28	76.46	77.9	76.82	76.82	77.9	94.82	76.64	188.9	
970	171.86	202.64	183.2	188.96	185.72	110.48	79.52	82.04	76.28	76.64	78.08	76.82	76.64	77.72	97.52	76.28	186.5	
980	157.82	188.78	172.58	178.7	185.36	110.48	79.88	82.22	76.28	76.64	78.08	76.82	76.46	77.54	91.94	77.0	176.6	
990	160.88	190.4	176.54	181.76	185.0	112.28	79.7	81.86	76.1	76.28	77.9	76.46	76.46	77.54	91.76	77.0	178.9	
1000	175.64	199.4	190.22	191.84	184.46	111.74	78.8	81.68	76.1	76.28	77.72	76.28	76.46	77.54	98.6	75.74	188.3	
1010	169.34	192.38	185.18	185.54	184.46	110.66	79.16	81.5	76.1	76.28	77.72	76.46	76.28	77.54	96.62	76.28	183.4	
1020	156.92	183.56	174.74	176.0	184.28	111.02	79.52	82.04	75.92	76.1	77.72	76.46	76.28	77.18	90.68	77.0	175.1	
1030	161.96	189.68	182.48	181.76	183.92	112.28	78.98	81.68	75.92	76.1	77.54	76.28	76.1	77.18	91.94	76.64	180.0	
1040	173.12	195.62	191.12	187.88	183.56	110.84	78.44	81.32	75.74	75.92	77.54	76.28	76.1	77.18	98.24	75.92	186.3	

DROLET POÊLES FOYERS
Fichier: Cert_B415_2010-01-13
Onglet: Sheet1

page 1 de 1

imprimé le: 2016-09-06

002- Appendix B- Data and Calculation Forms (page 32 of 39)

Données brutes du Multiscan

	Top	Back	R.Side	L.Side	Bottom	Flue	Ambiant	Tunnel	DGM 1 in	DGM 1 out	Filter #1	DGM 2 in	DGM 2 out	Filter #2	Pitot	Air Return	Average
Mean	227.5	184.4	193.0	199.0	216.3	152.5	81.7	95.1	76.9	77.1	-392.3	77.4	77.3	-440.3	99.3	78.5	
MAXIMUM	488.3	253.0	291.0	304.3	380.8	459.5	88.2	229.3	80.1	80.1	84.6	80.4	80.2	82.0	128.5	82.8	
MINIMUM	142.5	123.1	145.6	153.5	180.3	104.0	73.8	77.0	70.3	70.2	-5866.1	69.6	69.6	-5866.1	87.1	70.3	
Time (min)	(°F)	(°F)	(°F)	(°F)	(°F)	(°F)	(°F)	(°F)	(°F)	(°F)	(°F)	(°F)	(°F)	(°F)	(°F)	(°F)	
1050	164.48	188.24	183.2	179.78	183.38	109.58	78.62	81.5	75.74	75.74	77.18	75.92	76.1	77.18	95.36	75.74	179.8
1060	155.84	182.66	176.0	173.66	183.56	111.02	77.54	80.78	74.84	75.2	76.64	75.74	75.74	76.46	89.24	73.94	174.3
1070	158.72	187.7	181.22	177.26	183.56	111.92	77.18	80.24	73.94	74.84	75.92	74.66	75.2	75.92	89.78	73.76	177.7
1080	161.78	191.48	185.36	179.96	183.38	112.28	76.82	80.24	73.58	74.12	75.2	74.3	74.66	75.38	90.32	73.22	180.4
1090	170.96	194.9	191.84	183.74	183.2	111.92	76.64	80.06	73.22	73.94	75.02	74.12	74.48	74.84	92.3	72.32	184.9
1100	174.56	194.9	196.7	185.72	183.56	111.38	76.1	79.7	73.04	73.58	74.66	73.76	73.94	74.3	97.88	71.96	187.1
1110	172.94	192.92	195.26	184.1	183.38	110.66	75.2	78.98	72.68	73.22	74.3	73.4	73.58	73.94	97.16	71.96	185.7
1120	171.32	190.94	194.0	182.12	183.56	110.12	75.74	78.8	72.5	72.86	73.76	73.04	73.22	73.58	96.44	71.42	184.4
1130	169.16	188.42	192.2	179.78	183.56	109.58	75.02	78.62	72.14	72.5	73.58	72.86	73.04	73.4	95.72	71.42	182.6
1140	166.28	185.0	189.86	177.44	183.74	109.4	74.3	78.26	71.78	72.14	73.22	72.68	72.68	72.86	94.82	71.24	180.5
1150	162.32	181.04	187.88	174.56	183.74	108.86	75.02	78.08	71.24	71.78	72.68	71.96	72.14	72.32	93.02	70.88	177.9
1160	152.24	174.92	179.78	167.54	183.92	109.4	74.66	77.9	71.24	71.42	72.5	71.78	71.78	71.96	87.08	71.42	171.7
1170	158.18	178.7	185.18	170.6	183.74	109.76	74.48	77.54	70.88	71.24	72.14	71.6	71.6	71.96	88.16	71.78	175.3
1180	169.16	185.0	197.78	178.16	183.92	108.86	73.76	77.36	70.88	71.24	72.14	71.24	71.42	71.6	96.8	70.34	182.8
1190	166.64	181.94	196.34	174.92	184.1	107.96	74.12	77.0	70.52	70.88	71.78	71.42	71.42	71.42	95.9	70.7	180.8
1200	161.78	177.08	191.48	169.88	184.28	106.34	75.02	77.72	71.42	71.6	72.32	71.78	71.42	71.78	94.64	72.32	176.9
1210	155.66	170.96	187.16	164.84	184.28	105.44	75.74	78.08	72.32	72.14	73.04	72.5	72.14	72.32	93.2	73.4	172.6
1220	147.02	165.2	179.6	159.08	184.28	105.62	76.1	77.9	72.68	72.32	73.58	72.68	72.14	72.86	88.34	74.48	167.0
1230	159.44	173.48	194.72	167.72	184.1	105.26	75.74	78.44	73.04	73.22	74.3	73.22	72.86	73.4	96.26	73.4	175.9
1240	155.3	168.98	190.4	162.68	184.28	104.18	76.28	78.62	73.4	73.4	74.66	73.58	73.04	73.94	95.0	73.94	172.3
1250	142.52	158.18	179.78	153.5	184.82	104.0	76.82	78.98	73.58	73.58	74.66	73.58	73.4	74.12	88.88	74.48	163.8
																	#DIV/0!
																	#DIV/0!
																	#DIV/0!
																	#DIV/0!

DROLET POÊLES FOYERS
Fichier: Cert_B415_2010-01-13
Onglet: Sheet1

page 1 de 1

imprimé le: 2016-09-06

002- Appendix B- Data and Calculation Forms (page 33 of 39)

Intertek

E&E Boiler Tunnel Traverse Worksheet

Static Pressure: 0.08

Barometer: 30.06

	TUNNEL VELOCITY	TUNNEL TEMP	SQUARE ROOT
A CENTER	0.040	90.6	0.2000
B CENTER	0.040	90.6	0.2000
A1	0.030	90.6	0.1732
A2	0.038	90.6	0.1949
A3	0.040	90.6	0.2000
A4	0.030	90.2	0.1732
B1	0.030	90.6	0.1732
B2	0.038	90.6	0.1949
B3	0.040	90.6	0.2000
B4	0.030	90.2	0.1732
AVERAGE		90.52	0.1883

PITOT CONSTANT= 0.9413

002- Appendix B- Data and Calculation Forms (page 34 of 39)

Intertek

E&E FUEL LOAD DATA SHEET

Manufacturer: SBI
Model: MAX Caddy
Run #: 3
Test Date: 2010-01-14

Control#: 3198245/20712-0000121
Tech: C. Paré

Test Load Weight:

	Lower	Ideal	Upper
	40.50	45.00	49.50

Firebox Volume: 4.5 cu. ft

Load Volume: 0.0000 cu. ft

Loading Density: 10.722 lbs./ft3

Number of Spaces:

Spacer weight:

Load Density (wet): #DIV/0! lbs./ft3

Dry Wood Density: #DIV/0!

Piece Size: Thick	x Wide	x Length	Weight lbs	Meter Moisture Content Dry	Uncorrected %	Ave. MC x Weight	Volume Cubic Inches
			7.11	22.30	17.70	20.70	143.86	0.00
			7.89	20.10	19.40	25.20	170.16	0.00
			10.14	20.00	25.50	21.80	227.47	0.00
			5.56	21.10	25.80	22.80	129.18	0.00
			7.53	21.30	18.10	27.90	168.92	0.00
			10.02	21.20	19.20	28.00	228.46	0.00
						SUM MCxWT	1068.050333	

Test Load Weight: 48.25 lbs.

Dry Weight: 17.92 kg.

Wet: 18.12 must be 15-25

Average Moisture Content: %

Dry: 22.14

22.14 Must be 18-28

002- Appendix B- Data and Calculation Forms (page 35 of 39)

14.01.2010	14.01.2010	13:43:49											
14.01.2010	13:43:49	COM1: SBI_1: U230015606	Measure	C1: CO	0.5 %	C2: CO2	14.5 %	C3: CO	788 vpm	C4: O2	4.85 %		
14.01.2010	13:53:49	COM1: SBI_1: U230015606	Measure	C1: CO	0.8 %	C2: CO2	4.93 %	C3: CO	900 vpm	C4: O2	13.8 %		
14.01.2010	14:03:49	COM1: SBI_1: U230015606	Measure	C1: CO	0.5 %	C2: CO2	7.16 %	C3: CO	788 vpm	C4: O2	13.1 %		
14.01.2010	14:13:49	COM1: SBI_1: U230015606	Measure	C1: CO	0.9 %	C2: CO2	5.31 %	C3: CO	788 vpm	C4: O2	13.4 %		
14.01.2010	14:23:49	COM1: SBI_1: U230015606	Measure	C1: CO	0.8 %	C2: CO2	5.94 %	C3: CO	788 vpm	C4: O2	12.8 %		
14.01.2010	14:33:49	COM1: SBI_1: U230015606	Measure	C1: CO	0.5 %	C2: CO2	6.98 %	C3: CO	788 vpm	C4: O2	12.9 %		
14.01.2010	14:43:49	COM1: SBI_1: U230015606	Measure	C1: CO	0.5 %	C2: CO2	8.67 %	C3: CO	788 vpm	C4: O2	10.7 %		
14.01.2010	14:53:49	COM1: SBI_1: U230015606	Measure	C1: CO	0.4 %	C2: CO2	9.22 %	C3: CO	788 vpm	C4: O2	10.3 %		
14.01.2010	15:03:49	COM1: SBI_1: U230015606	Measure	C1: CO	0.5 %	C2: CO2	9.75 %	C3: CO	788 vpm	C4: O2	9.61 %		
14.01.2010	15:13:49	COM1: SBI_1: U230015606	Measure	C1: CO	0.4 %	C2: CO2	9.25 %	C3: CO	788 vpm	C4: O2	10.5 %		
14.01.2010	15:23:49	COM1: SBI_1: U230015606	Measure	C1: CO	0.3 %	C2: CO2	8.79 %	C3: CO	788 vpm	C4: O2	11.3 %		
14.01.2010	15:33:49	COM1: SBI_1: U230015606	Measure	C1: CO	0.4 %	C2: CO2	9.06 %	C3: CO	788 vpm	C4: O2	10.9 %		
14.01.2010	15:43:49	COM1: SBI_1: U230015606	Measure	C1: CO	0.3 %	C2: CO2	8.67 %	C3: CO	788 vpm	C4: O2	11.3 %		
14.01.2010	15:53:49	COM1: SBI_1: U230015606	Measure	C1: CO	0.2 %	C2: CO2	7.54 %	C3: CO	788 vpm	C4: O2	12.8 %		
14.01.2010	16:03:49	COM1: SBI_1: U230015606	Measure	C1: CO	0.2 %	C2: CO2	7.21 %	C3: CO	788 vpm	C4: O2	13.2 %		
14.01.2010	16:13:49	COM1: SBI_1: U230015606	Measure	C1: CO	0.5 %	C2: CO2	6.2 %	C3: CO	788 vpm	C4: O2	13.7 %		
14.01.2010	16:23:49	COM1: SBI_1: U230015606	Measure	C1: CO	1.1 %	C2: CO2	4.54 %	C3: CO	788 vpm	C4: O2	14.4 %		
14.01.2010	16:33:49	COM1: SBI_1: U230015606	Measure	C1: CO	1 %	C2: CO2	4.44 %	C3: CO	900 vpm	C4: O2	14.7 %		
14.01.2010	16:43:49	COM1: SBI_1: U230015606	Measure	C1: CO	0.9 %	C2: CO2	4.88 %	C3: CO	900 vpm	C4: O2	14.7 %		
14.01.2010	16:53:49	COM1: SBI_1: U230015606	Measure	C1: CO	0.8 %	C2: CO2	5.43 %	C3: CO	788 vpm	C4: O2	14.2 %		
14.01.2010	17:03:49	COM1: SBI_1: U230015606	Measure	C1: CO	1.1 %	C2: CO2	4.01 %	C3: CO	900 vpm	C4: O2	15.4 %		
14.01.2010	17:13:49	COM1: SBI_1: U230015606	Measure	C1: CO	1 %	C2: CO2	3.75 %	C3: CO	900 vpm	C4: O2	15.7 %		
14.01.2010	17:23:49	COM1: SBI_1: U230015606	Measure	C1: CO	1 %	C2: CO2	3.72 %	C3: CO	900 vpm	C4: O2	15.7 %		
14.01.2010	17:33:49	COM1: SBI_1: U230015606	Measure	C1: CO	0.9 %	C2: CO2	3.93 %	C3: CO	788 vpm	C4: O2	16 %		
14.01.2010	17:43:49	COM1: SBI_1: U230015606	Measure	C1: CO	0.8 %	C2: CO2	3.68 %	C3: CO	788 vpm	C4: O2	16.3 %		
14.01.2010	17:53:49	COM1: SBI_1: U230015606	Measure	C1: CO	0.8 %	C2: CO2	3.73 %	C3: CO	788 vpm	C4: O2	16.4 %		
14.01.2010	18:03:49	COM1: SBI_1: U230015606	Measure	C1: CO	0.8 %	C2: CO2	3.62 %	C3: CO	788 vpm	C4: O2	16.3 %		
14.01.2010	18:13:49	COM1: SBI_1: U230015606	Measure	C1: CO	0.5 %	C2: CO2	3.34 %	C3: CO	788 vpm	C4: O2	16.7 %		
14.01.2010	18:23:49	COM1: SBI_1: U230015606	Measure	C1: CO	0.5 %	C2: CO2	3.31 %	C3: CO	788 vpm	C4: O2	16.8 %		
14.01.2010	18:33:49	COM1: SBI_1: U230015606	Measure	C1: CO	0.4 %	C2: CO2	3.26 %	C3: CO	788 vpm	C4: O2	16.8 %		
14.01.2010	18:43:49	COM1: SBI_1: U230015606	Measure	C1: CO	0.4 %	C2: CO2	3.06 %	C3: CO	788 vpm	C4: O2	16.9 %		
14.01.2010	18:53:49	COM1: SBI_1: U230015606	Measure	C1: CO	0.4 %	C2: CO2	2.86 %	C3: CO	788 vpm	C4: O2	17.2 %		
14.01.2010	19:03:49	COM1: SBI_1: U230015606	Measure	C1: CO	0.5 %	C2: CO2	2.71 %	C3: CO	788 vpm	C4: O2	17.3 %		

002- Appendix B- Data and Calculation Forms (page 36 of 39)

14.01.2010	19:13:49	COM1: SBI_1: U230015606	Measure	C1: CO	0.4 %	C2: CO2	2.74 %	C3: CO	788 vpm	C4: O2	17.4 %
14.01.2010	19:23:49	COM1: SBI_1: U230015606	Measure	C1: CO	0.4 %	C2: CO2	2.49 %	C3: CO	788 vpm	C4: O2	17.7 %
14.01.2010	19:33:49	COM1: SBI_1: U230015606	Measure	C1: CO	0.4 %	C2: CO2	2.49 %	C3: CO	788 vpm	C4: O2	17.7 %
14.01.2010	19:43:49	COM1: SBI_1: U230015606	Measure	C1: CO	0.4 %	C2: CO2	2.35 %	C3: CO	788 vpm	C4: O2	17.8 %
14.01.2010	19:53:49	COM1: SBI_1: U230015606	Measure	C1: CO	0.4 %	C2: CO2	2.28 %	C3: CO	788 vpm	C4: O2	18 %
14.01.2010	20:03:49	COM1: SBI_1: U230015606	Measure	C1: CO	0.4 %	C2: CO2	2.25 %	C3: CO	788 vpm	C4: O2	18 %
14.01.2010	20:13:49	COM1: SBI_1: U230015606	Measure	C1: CO	0.4 %	C2: CO2	2.2 %	C3: CO	788 vpm	C4: O2	18.1 %
14.01.2010	20:23:49	COM1: SBI_1: U230015606	Measure	C1: CO	0.3 %	C2: CO2	2.19 %	C3: CO	788 vpm	C4: O2	18.1 %
14.01.2010	20:33:49	COM1: SBI_1: U230015606	Measure	C1: CO	0.3 %	C2: CO2	2.18 %	C3: CO	788 vpm	C4: O2	18.2 %
14.01.2010	14.01.2010	20:35:59									

002- Appendix B- Data and Calculation Forms (page 37 of 39)

Données brutes du Multiscan

DATE: 12-01-10 **Test :** 3

	Top	Back	R.Side	L.Side	Bottom	Flue	Ambiant	Tunnel	DGM 1 in	DGM 1 out	Filter #1	DGM 2 in	DGM 2 out	Filter #2	Pitot	Air Return	Average	
Means	267.4	197.8	212.9	222.7	260.7	211.0	83.0	112.4	78.2	78.3	80.8	78.6	78.5	-516.4	103.0	80.0		
MAXIMUM	466.7	225.1	267.6	296.1	373.5	449.2	85.3	230.5	80.1	80.1	81.7	80.2	80.2	80.4	125.6	82.6		
MINIMUM	163.6	180.1	186.4	188.1	209.3	142.9	81.0	91.4	75.9	75.6	79.3	75.4	75.4	-5866.1	94.8	76.6		
Time (min)	Top	Back	R.Side	L.Side	Bottom	Flue	Ambiant	Tunnel	DGM 1 in	DGM 1 out	Filter #1	DGM 2 in	DGM 2 out	Filter #2	Pitot	Air Return	Average	
	(°F)	(°F)	(°F)	(°F)	(°F)	(°F)	(°F)	(°F)	(°F)	(°F)	(°F)	(°F)	(°F)	(°F)	(°F)	(°F)		
	1	2	3	4	5	6	7	8	9	10	11	12	13	14	15	16		
0	447.98	211.46	256.1	291.92	295.34	326.66	84.2	136.4	75.92	75.56	79.34	75.38	75.38	######	119.12	77.54	300.6	
10	366.98	223.34	267.62	296.06	338.54	262.76	83.3	139.1	76.1	75.92	80.42	75.92	75.56	######	111.56	76.64	298.5	
20	319.28	225.14	259.7	284.0	354.92	243.5	80.96	129.2	76.1	75.92	80.96	76.1	75.92	######	108.68	77.36	288.6	
30	287.24	221.36	248.0	268.88	362.48	226.76	82.58	122.0	76.46	76.28	81.14	76.46	76.46	######	105.62	78.08	277.6	
40	267.26	214.52	238.1	254.84	368.24	218.3	81.68	118.04	76.64	76.64	81.14	76.64	76.46	######	103.82	76.82	268.6	
50	258.26	209.3	231.8	247.28	372.38	217.04	82.58	113.54	76.64	76.64	81.32	76.82	76.64	78.98	103.82	78.26	263.8	
60	242.78	205.7	226.76	240.62	373.46	200.48	82.22	101.66	76.28	76.46	80.6	76.64	76.46	78.62	101.48	78.08	257.9	
70	231.08	203.9	225.68	237.38	372.74	237.2	82.22	130.82	76.28	76.64	80.96	76.82	76.82	78.44	100.94	77.0	254.2	Start
80	466.7	200.12	224.24	232.16	368.24	449.24	83.3	230.54	76.82	76.64	80.96	77.0	76.82	78.8	125.6	77.9	298.3	
90	412.16	212.36	219.02	229.64	353.48	365.36	84.02	183.38	77.18	77.0	81.5	77.18	77.18	79.34	117.14	79.16	285.3	
100	400.64	211.1	217.22	228.56	334.4	330.26	84.38	166.64	77.54	77.54	81.68	77.72	77.54	79.16	114.26	78.62	278.4	
110	372.74	207.5	215.78	225.14	314.42	322.34	83.12	162.68	77.9	77.9	81.68	78.26	77.72	79.16	111.92	79.16	267.1	
120	366.98	204.62	214.7	222.08	296.42	312.26	81.5	155.48	77.18	77.18	81.5	77.72	77.54	78.44	111.56	79.34	261.0	
130	356.54	201.2	212.72	219.38	280.22	209.84	82.94	105.08	77.36	77.36	81.32	77.9	77.54	78.26	107.6	78.44	254.0	
140	350.96	197.78	209.48	214.88	266.72	222.08	81.5	107.06	77.72	77.72	81.32	78.08	78.08	77.54	107.42	79.52	248.0	
150	374.0	195.62	210.74	214.7	255.38	229.1	82.76	108.68	77.0	77.18	80.42	77.72	77.72	76.28	108.32	78.8	250.1	
160	389.48	196.52	215.78	218.84	246.56	235.94	83.12	110.48	77.72	77.54	80.96	78.26	77.9	75.74	110.3	79.52	253.4	
170	386.06	199.94	221.18	223.88	239.18	228.92	82.58	108.86	77.54	77.54	80.78	78.08	78.08	75.56	110.12	79.16	254.0	
180	376.16	202.28	224.06	226.94	233.42	221.72	82.22	107.6	77.0	77.18	80.06	78.08	77.9	75.02	109.4	80.24	252.6	
190	363.56	203.54	225.32	228.38	228.56	227.84	84.92	109.22	77.36	77.54	80.06	78.26	78.08	74.66	108.86	78.98	249.9	
200	358.88	205.34	228.74	231.62	224.78	218.48	83.84	106.52	77.9	77.9	80.42	78.62	78.26	75.2	108.32	79.16	249.9	
210	339.8	207.14	228.92	234.14	221.72	200.12	83.48	102.2	78.26	78.08	79.88	78.62	78.44	75.56	106.16	79.34	246.3	
220	320.54	205.7	225.86	233.24	219.38	188.78	84.02	99.86	78.62	78.44	80.24	78.8	78.62	75.38	104.54	79.16	240.9	
230	289.76	203.72	222.26	230.0	217.22	178.7	83.66	97.52	78.44	78.44	80.6	78.98	78.62	75.2	102.56	79.88	232.6	
240	260.96	201.74	217.76	226.94	215.06	161.42	83.66	94.82	78.98	78.62	80.24	79.16	78.98	76.1	100.22	79.52	224.5	
250	239.9	199.4	213.26	219.92	213.26	156.56	83.3	94.28	79.52	78.98	79.88	79.52	78.98	76.46	99.32	79.88	217.1	
260	229.82	196.16	208.94	213.08	211.64	153.68	82.94	92.84	79.16	78.98	80.06	79.34	78.98	76.1	97.88	78.8	211.9	
270	231.98	191.84	207.32	207.32	210.2	155.84	83.3	92.66	79.16	79.16	79.52	79.34	79.16	75.92	97.7	80.24	209.7	
280	219.92	190.58	206.78	205.16	209.48	149.0	83.3	91.94	79.34	79.16	79.52	79.52	79.16	76.64	97.7	81.14	206.4	

DROLET POÊLES FOYERS
Fichier: Cert_B415_2010-01-14
Onglet: Sheet1

page 1 de 1

imprimé le: 2016-09-06

002- Appendix B- Data and Calculation Forms (page 38 of 39)

Données brutes du Multiscan

Means	267.4	197.8	212.9	222.7	260.7	211.0	83.0	112.4	78.2	78.3	80.8	78.6	78.5	-516.4	103.0	80.0		
MAXIMUM	466.7	225.1	267.6	296.1	373.5	449.2	85.3	230.5	80.1	80.1	81.7	80.2	80.2	80.4	125.6	82.6		
MINIMUM	163.6	180.1	186.4	188.1	209.3	142.9	81.0	91.4	75.9	75.6	79.3	75.4	75.4	-5866.1	94.8	76.6		
Time (min)	Top	Back	R.Side	L.Side	Bottom	Flue	Ambiant	Tunnel	DGM 1 in	DGM 1 out	Filter #1	DGM 2 in	DGM 2 out	Filter #2	Pitot	Air Return	Average	
	(°F)	(°F)	(°F)	(°F)	(°F)	(°F)	(°F)	(°F)	(°F)	(°F)	(°F)	(°F)	(°F)	(°F)	(°F)	(°F)		
290	205.34	188.96	203.54	203.36	209.3	142.88	82.58	91.4	79.16	79.34	79.52	79.7	79.16	76.82	96.98	82.58	202.1	
300	195.8	187.34	200.66	201.38	209.48	143.24	84.02	91.76	79.34	79.16	79.7	79.7	79.34	77.36	96.44	81.5	198.9	
310	192.02	186.26	199.22	201.92	209.84	153.86	83.12	93.92	79.52	79.34	80.06	79.7	79.52	77.72	97.16	81.68	197.9	
320	188.78	185.9	199.22	205.52	210.92	152.96	84.56	93.74	79.52	79.52	80.42	79.88	79.7	77.9	96.98	82.04	198.1	
330	188.06	186.44	198.86	207.68	212.72	152.42	85.28	94.1	79.88	79.88	80.78	80.06	79.7	78.44	96.8	81.5	198.8	
340	189.68	187.7	199.4	210.02	215.42	153.32	83.48	93.92	80.06	80.06	81.14	80.24	80.06	78.8	97.34	82.04	200.4	
350	188.24	187.7	199.4	211.46	218.3	160.7	82.58	95.18	79.7	79.7	81.14	80.06	79.88	78.8	97.34	81.68	201.0	
360	187.16	188.42	198.5	212.18	221.36	160.88	83.66	95.18	79.7	79.88	81.14	80.06	79.88	78.8	97.16	81.68	201.5	
370	188.6	188.78	197.6	213.26	224.42	161.6	83.66	95.54	79.7	79.88	81.32	80.24	80.24	78.8	97.52	82.04	202.5	
380	189.5	188.78	196.52	214.52	227.66	193.82	83.84	100.04	79.52	79.7	81.32	80.06	80.06	79.16	98.42	81.86	203.4	
390	188.06	189.86	196.52	217.22	230.9	190.94	82.94	99.68	79.16	79.34	81.14	80.06	79.88	78.98	98.24	82.04	204.5	
400	185.18	190.22	196.7	215.96	235.04	190.22	83.66	99.68	79.16	79.34	81.32	80.06	79.88	79.16	97.88	81.86	204.6	
410	182.84	190.22	196.16	214.16	238.82	186.8	84.02	99.14	79.52	79.7	81.32	80.06	80.06	79.34	97.88	82.04	204.4	
420	177.8	190.58	196.34	211.82	241.88	183.2	83.12	98.24	79.52	79.52	81.5	80.06	80.06	79.7	97.34	82.04	203.7	
430	177.44	190.22	196.52	208.76	244.58	203.18	82.94	110.48	78.98	79.34	81.5	79.7	79.88	80.06	97.52	81.68	203.5	
440	176.0	189.5	195.98	205.16	246.2	201.02	81.86	109.58	78.62	79.16	81.32	79.52	79.7	80.06	96.8	81.14	202.6	
450	172.58	188.78	194.18	201.56	247.1	197.96	81.5	108.68	78.8	78.98	81.32	79.7	79.52	80.42	96.44	81.32	200.8	
460	170.42	186.62	192.56	197.6	247.64	195.8	81.86	108.32	78.8	78.98	81.5	79.34	79.52	80.42	96.26	81.32	199.0	
470	168.44	184.82	190.4	193.64	247.82	192.92	81.86	107.6	78.44	78.8	81.5	79.16	79.34	80.24	95.72	80.78	197.0	
480	165.2	182.48	188.06	190.58	247.82	191.12	81.5	107.06	78.08	78.62	81.32	78.98	79.16	80.24	95.18	80.6	194.8	
490	163.58	180.14	186.44	188.06	247.46	188.96	81.14	105.98	78.26	78.44	81.14	79.16	78.98	80.06	94.82	80.6	193.1	
																	#DIV/0!	
																	#DIV/0!	
																	#DIV/0!	
																	#DIV/0!	
																	#DIV/0!	
																	#DIV/0!	
																	#DIV/0!	
																	#DIV/0!	
																	#DIV/0!	
																	#DIV/0!	
																	#DIV/0!	
																	#DIV/0!	
																	#DIV/0!	
																	#DIV/0!	
																	#DIV/0!	
																	#DIV/0!	
																	#DIV/0!	

DROLET POÊLES FOYERS
Fichier: Cert_B415_2010-01-14
Onglet: Sheet1

page 1 de 1

imprimé le: 2016-09-06

002- Appendix B- Data and Calculation Forms (page 39 of 39)

Intertek

E&E Boiler Tunnel Traverse Worksheet

Static Pressure: 0.1

Barometer: 30.18

	TUNNEL VELOCITY	TUNNEL TEMP	SQUARE ROOT
A CENTER	0.050	102.8	0.2236
B CENTER	0.050	102.8	0.2236
A1	0.040	102	0.2000
A2	0.045	101.2	0.2121
A3	0.050	101.4	0.2236
A4	0.037	100	0.1924
B1	0.040	102	0.2000
B2	0.045	101.2	0.2121
B3	0.050	101.4	0.2236
B4	0.037	100	0.1924
AVERAGE		101.48	0.2103

PITOT CONSTANT= 0.9407

002- Appendix B2- Data and Calculation Forms

2010-02-04 Witness 01

002- Appendix B2- Data and Calculation Forms (page 2 of 94)

Intertek Testing Services

SFBA EPA ADJUSTED EMISSION RESULTS

Manufacturer:	**SBI**	RESULTS	
Model:	**MAX Caddy**		
Date:	**02-04-2010**	**Average emission rate:(gr/hr)**	**4.8**
Run:	**0**		
Project #:	**0**	Burn Rate (Dry kg/hr):	2.335
Test Duration: (minutes)	**440**		

PRESSURE FACTOR:		1.01070	BAROMETRIC PRESSURE		
				Average:	30.24
TEMPERATURE FACTORS				Start:	30.24
	DGM #1:	0.982250453		End:	30.24
	DGM #2:	0.981645785			
			DRY GAS METER VALUES		
VOLUMES SAMPLED			DGM #1	Final:	381.436
	DGM #1:	11.05021		Initial:	370.078
	DGM #2:	13.10659			
			DGM #2	Final:	372.346
TOTAL TUNNEL VOLUME (scf):		69809		Initial:	358.783
SAMPLE RATIOS			TEMPERATURES (DEG. RANKIN)		
Sample Train 1:		6317.464		DGM #1:	537.541
Sample Train 2:		5326.273		DGM #2:	537.872
TOTAL EMISSIONS			CALIBRATION FACTORS		
Sample Train 1 (g):		**36.01**		DGM #1:	0.9800
Sample Train 2 (g):		**34.62**		DGM #2:	0.9740
EMISSION RATES			TUNNEL FLOW RATE:		158.657
Sample Train 1 (g/hr):		**4.91**			
Sample Train 2 (g/hr):		**4.72**	PARTICULATE CATCH (mg)		
				Total Sample Train 1:	5.7
				Total Sample Train 2:	6.5
				Filter and seal Sample Train 1:	3.5
	MAX Allowed	7.50%		Filter and seal Sample Train 2:	3.9
				Probe Sample Train 1:	2.2
DEVIATION:		3.93%		Probe Sample Train 2:	2.6

	Train 1	Train 2				
				Room Particulate Correction		
Cs	0.000515827	0.000495934		Mr	0	Milligram Catch (mg)
Cr	#DIV/0!	#DIV/0!		Vmr	0	Total Volume Sampled (dscf)
Et	#DIV/0!	#DIV/0!				Rotometer (glass) at 100
						flow rate is 0.12924 cfm
Et	AVERAGE	#DIV/0!	Grams Emissions			

002- Appendix B2- Data and Calculation Forms (page 3 of 94)

Humidity	Temp. C	kg H_2O/kg air	Baro	Duct S.P.	Duct Abs.P
20%	25.0	0.0006	30.24	0.145	30.25
		(from Psychro.Chart)	in Hg	in H_2O	in Hg

Total Output	205,722	mJ	195,118	Btu
Output Rate	28,053	mJ/h	26,607	Btu/h
Total Input	340,267	mJ	322,727	Btu
EFFIC.	60.5%			

Time	lbs Load Wt.	C Outlet T	C Return T	mm H2O Duct Vel. P.	SQRT Vel. P.	Flow Rate m/sec	Volumetric Flow M^3/sec
0.00	45.6	39.3888889	25.38888889	1.3335	1.155	4.027	0.498
10.00	40.0	47.2777778	25.72222222	1.5240	1.235	4.359	0.539
20.00	37.7	45.5	25.61111111	1.3335	1.155	4.066	0.503
30.00	35.1	45	25.11111111	1.3335	1.155	4.063	0.503
40.00	32.7	44.6111111	25.11111111	1.3335	1.155	4.060	0.502
50.00	30.5	44.2222222	25.61111111	1.3335	1.155	4.058	0.502
60.00	28.3	43.5	25.5	1.3335	1.155	4.053	0.501
70.00	26.1	43.7222222	25.88888889	1.3335	1.155	4.054	0.502
80.00	24.0	43.3888889	26	1.3335	1.155	4.052	0.501
90.00	22.0	43.2777778	25.77777778	1.3335	1.155	4.052	0.501
100.00	20.3	41.8888889	25.5	1.3335	1.155	4.043	0.500
110.00	18.7	41.6111111	25.72222222	1.3335	1.155	4.041	0.500
120.00	17.0	41.5	25.61111111	1.3335	1.155	4.040	0.500
130.00	15.7	41.6111111	25.77777778	1.3335	1.155	4.041	0.500
140.00	14.4	41.2222222	26.27777778	1.3335	1.155	4.038	0.500
150.00	13.3	40.2777778	26.11111111	1.3335	1.155	4.032	0.499
160.00	12.3	39.1111111	26.27777778	1.2700	1.127	3.928	0.486
170.00	11.3	40.3888889	26.77777778	1.2700	1.127	3.936	0.487
180.00	10.1	40.1111111	26.5	1.2700	1.127	3.934	0.487
190.00	9.3	39.2222222	26.61111111	1.2700	1.127	3.929	0.486
200.00	8.4	39.2777778	26.22222222	1.2700	1.127	3.929	0.486
210.00	7.9	37.2777778	26.38888889	1.2700	1.127	3.916	0.484
220.00	7.4	37.3888889	26.61111111	1.2700	1.127	3.917	0.485
230.00	6.8	37.1111111	26.72222222	1.2700	1.127	3.915	0.484
240.00	6.4	36.7222222	26.27777778	1.2700	1.127	3.913	0.484
250.00	6.0	36.5	26.72222222	1.2065	1.098	3.812	0.472
260.00	5.5	36.1111111	26.38888889	1.2065	1.098	3.810	0.471
270.00	5.1	35.7777778	25.77777778	1.2065	1.098	3.808	0.471
280.00	4.7	35.7777778	26.38888889	1.2065	1.098	3.808	0.471
290.00	4.3	35.7777778	26.77777778	1.2065	1.098	3.808	0.471
300.00	3.9	35.7777778	26.72222222	1.2065	1.098	3.808	0.471
310.00	3.5	35.7777778	26.38888889	1.2065	1.098	3.808	0.471
320.00	3.0	35.5	25.72222222	1.2065	1.098	3.806	0.471
330.00	2.6	35.3888889	25.88888889	1.2065	1.098	3.806	0.471
340.00	2.3	35.6111111	26.27777778	1.2065	1.098	3.807	0.471
350.00	2.0	35.1111111	26	1.2065	1.098	3.804	0.471
360.00	1.6	34.5	24.88888889	1.2065	1.098	3.800	0.470
370.00	1.4	34.3888889	25.88888889	1.2065	1.098	3.799	0.470
380.00	1.1	34.2777778	26.11111111	1.2065	1.098	3.799	0.470
390.00	0.9	34.2222222	26.5	1.2065	1.098	3.798	0.470
400.00	0.7	34.3888889	26.38888889	1.2065	1.098	3.799	0.470
410.00	0.5	35.2222222	25.77777778	1.2065	1.098	3.804	0.471
420.00	0.3	34.7777778	25.72222222	1.2065	1.098	3.802	0.470
430.00	0.1	34.5	25.77777778	1.2065	1.098	3.800	0.470
440.00	0.0	34.3888889	26.22222222	1.2065	1.098	3.799	0.470

002- Appendix B2- Data and Calculation Forms (page 4 of 94)

Pitot Factor		Duct area		Air Density @ STP	
0.8440	0.99	0.1237	M^2	1.204	kg/m^3

Corrected to STP Std M^3/sec	Mass Flow kg/hr	Enthalpy Change dh	Heat Rel. Rate de KJ/hr	Heat Rel. Rate de Btu/hr	Heat Out for Inter. KJ	Cumm. Heat Out KJ	Average Heat Out KJ/hr
0.516	2238.5	14.10	31,561	29,934	0	0	0
0.573	2485.2	21.71	53,951	51,170	7,048	7,048	**42,287**
0.532	2305.4	20.03	46,177	43,797	8,331	15,379	**46,138**
0.531	2300.0	20.03	46,069	43,694	7,687	23,066	**46,133**
0.530	2295.8	19.64	45,085	42,761	7,596	30,663	**45,994**
0.529	2291.5	18.74	42,951	40,737	7,336	37,999	**45,598**
0.527	2283.7	18.13	41,399	39,265	7,029	45,028	**45,028**
0.527	2286.1	17.96	41,059	38,942	6,872	51,899	**44,485**
0.527	2282.5	17.51	39,972	37,912	6,753	58,652	**43,989**
0.526	2281.3	17.62	40,207	38,134	6,682	65,333	**43,556**
0.523	2266.3	16.51	37,406	35,478	6,467	71,800	**43,080**
0.522	2263.3	16.00	36,217	34,350	6,135	77,936	**42,510**
0.522	2262.1	16.00	36,198	34,332	6,035	83,970	**41,985**
0.522	2263.3	15.95	36,090	34,230	6,024	89,994	**41,536**
0.521	2259.1	15.05	34,001	32,249	5,841	95,835	**41,072**
0.519	2249.0	14.27	32,086	30,432	5,507	101,342	**40,537**
0.504	2182.5	12.92	28,208	26,754	5,021	106,363	**39,886**
0.507	2195.9	13.71	30,101	28,550	4,859	111,222	**39,255**
0.506	2193.0	13.71	30,061	28,512	5,014	116,235	**38,745**
0.504	2183.7	12.70	27,734	26,305	4,816	121,051	**38,227**
0.504	2184.3	13.15	28,719	27,239	4,704	125,755	**37,727**
0.499	2163.3	10.97	23,723	22,501	4,368	130,124	**37,178**
0.499	2164.5	10.85	23,494	22,283	3,935	134,059	**36,561**
0.499	2161.6	10.46	22,616	21,450	3,842	137,901	**35,974**
0.498	2157.5	10.52	22,694	21,524	3,776	141,677	**35,419**
0.485	2100.6	9.85	20,685	19,619	3,613	145,290	**34,870**
0.484	2096.7	9.79	20,529	19,471	3,435	148,725	**34,321**
0.483	2093.3	10.07	21,081	19,995	3,468	152,192	**33,820**
0.483	2093.3	9.46	19,793	18,773	3,406	155,598	**33,343**
0.483	2093.3	9.06	18,973	17,995	3,231	158,829	**32,861**
0.483	2093.3	9.12	19,090	18,106	3,172	162,001	**32,400**
0.483	2093.3	9.46	19,793	18,773	3,240	165,241	**31,982**
0.482	2090.5	9.85	20,585	19,524	3,365	168,606	**31,614**
0.482	2089.3	9.57	19,990	18,959	3,381	171,987	**31,270**
0.483	2091.6	9.40	19,660	18,647	3,304	175,292	**30,934**
0.481	2086.5	9.18	19,145	18,158	3,234	178,525	**30,604**
0.480	2080.3	9.68	20,136	19,098	3,274	181,799	**30,300**
0.480	2079.2	8.56	17,799	16,881	3,161	184,960	**29,994**
0.479	2078.0	8.22	17,091	16,210	2,907	187,867	**29,663**
0.479	2077.5	7.78	16,157	15,324	2,771	190,638	**29,329**
0.480	2079.2	8.06	16,752	15,888	2,742	193,380	**29,007**
0.482	2087.6	9.51	19,857	18,833	3,050	196,431	**28,746**
0.481	2083.1	9.12	18,998	18,018	3,238	199,668	**28,524**
0.480	2080.3	8.78	18,274	17,332	3,106	202,774	**28,294**
0.480	2079.2	8.22	17,101	16,219	2,948	205,722	**28,053**

002- Appendix B2- Data and Calculation Forms (page 5 of 94)

Average Heat Out Btu/hr	TIME ON (sec) Unit on or off	Duct Flow CFM
0		1094.3
40,107		1214.9
43,759	20	1127.0
43,755		1124.3
43,623	20	1122.3
43,248		1120.2
42,707	20	1116.4
42,192		1117.6
41,721	20	1115.8
41,310		1115.2
40,860	20	1107.9
40,319		1106.4
39,821	20	1105.8
39,395		1106.4
38,955	20	1104.4
38,447		1099.4
37,830	20	1066.9
37,231	240	1073.5
36,748		1072.1
36,256	240	1067.5
35,782		1067.8
35,262	360	1057.5
34,677	360	1058.1
34,120	360	1056.7
33,593	360	1054.7
33,072	360	1026.9
32,552	360	1025.0
32,077	360	1023.3
31,624	360	1023.3
31,167	360	1023.3
30,730	360	1023.3
30,334	360	1023.3
29,984	360	1021.9
29,658	360	1021.4
29,339	360	1022.5
29,027	360	1020.0
28,738	240	1017.0
28,447	240	1016.4
28,134	240	1015.9
27,817	240	1015.6
27,512	120	1016.4
27,264	120	1020.5
27,054	120	1018.3
26,836	120	1017.0
26,607	120	1016.4

002- Appendix B2- Data and Calculation Forms (page 6 of 94)

Intertek

E&E FUEL LOAD DATA SHEET

Manufacturer: SBI
Model: 0
Run #:
Test Date: 02-04-2010

Control#: #REF!
Tech: C. Paré

			Test Load Weight: Lower	Ideal	Upper
Firebox Volume:	4.5	cu. ft	40.50	45.00	49.50
Load Volume:	0.0000	cu. ft			
Number of Spaces:					
Spacer weight:					

Loading Density: 10.138 lbs./ft3
Load Density (wet): #DIV/0! lbs./ft3
Dry Wood Density: #DIV/0!

Piece Size: Thick x	Wide x	Length	Weight lbs	Meter Moisture Content Dry Uncorrected %			Ave. MC x Weight	Volume Cubic Inches
			7.28	18.20	16.50	24.50	19.73	0.00
			7.48	20.50	24.00	19.20	21.23	0.00
			7.37	21.70	18.80	20.70	20.40	0.00
			7.65	28.40	25.10	25.10	26.20	0.00
			8.56	17.60	17.60	19.70	18.30	0.00
			7.28	20.10	18.60	19.20	19.30	0.00
								0.00
								0.00
								0.00
								0.00
								0.00
								0.00
								0.00
								0.00
								0.00
								0.00
						SUM MCxWT	20.86	

Test Load Weight: 45.62 lbs.
Dry Weight: 17.12 kg.

Average Moisture Content: %

Dry: 20.86 — 20.86 (Must be 18-28) — Wet: 17.26 (must be 15-25)

Dry:

Coal Bed Range: 4.6 lbs. to 11.4 lbs. 10% to 25% of test load

TEST CHARGE:
Time loaded:_____ Coal bed weight:_____lbs.

Coal bed weight = % of test load weight

002- Appendix B2- Data and Calculation Forms (page 7 of 94)

Flue Temp. (F)	Room Temp. (F)	Tunnel Temp. (F)	Outlet air Temp. (F)	top	back	right
299.5	80.2000	148.5	102.9	240.8	200.1	229.1
303.4	82.6	158.4	117.1	448.2	205.5	230.4
264.4	80.6	125.8	113.9	432.9	218.8	228.2
257.9	80.6	121.8	113	428.2	217.2	224.8
252.5	80.8	118.4	112.3	423.5	212.4	221.5
247.5	80.2	116.6	111.6	418.5	208.9	221
240.6	82.8	114.6	110.3	398.3	207.9	221.4
239	82.8	113.9	110.7	399.7	208.4	224.1
235.4	80.2	113.2	110.1	392.9	209.1	226.2
228.4	81.5	111	109.9	389.7	211	228.6
217.2	80.1	107.6	107.4	367.7	211.8	227.7
215.4	79.9	107.8	106.9	359.4	209.8	225.7
213.8	82.9	106.3	106.7	359.1	208.2	224.6
214.3	80.6	106.2	106.9	365.9	207	222.1
206.8	80.8	104.3	106.2	358.3	205.3	220.5
193.5	81.1	102.2	104.5	338.2	204.3	220.6
175.8	81.1	98	102.4	294.6	203.2	219.2
317.3	82.4	140.9	104.7	277.3	200.7	216.1
192.7	81.9	103.5	104.2	313.7	201.4	220.1
177.1	82.4	99.1	102.6	293.7	202.6	221.7
185.2	81	104.7	102.7	284.7	203.9	226
149.9	82.6	94.6	99.1	246	205.2	226.6
168.8	82.6	103.3	99.3	227.3	201.7	221
165.4	83.1	102.6	98.8	219.6	200.7	219.4
162.1	82.9	102.2	98.1	209.7	200.8	217.9
158.5	80.8	101.1	97.7	204.4	199.8	216.5
156.9	80.8	100.4	97	199	198.7	214.7
155.1	82.2	99.5	96.4	197.4	197.2	212.7
153.9	80.6	99	96.4	195.1	196.9	211.8
152.2	81.1	98.8	96.4	192	196	211.3
155.5	81.1	99.1	96.4	191.5	195.4	210.9
156.7	82	100	96.4	192.4	194.7	210.7
156.4	81.5	99.5	95.9	192.4	193.6	211.3
155.8	82.4	99.1	95.7	194.2	194.4	211.6
153.5	82	98.4	96.1	193.1	192.4	212
151.5	81.5	97.9	95.2	189.5	190.8	212.2
150.4	81.7	97.5	94.1	186.1	188.4	211.3
135.9	80.2	92.1	93.9	178	185.4	209.1
132.6	80.8	91.4	93.7	174.6	182.5	205.3
130.6	81.5	90.7	93.6	170.2	178.3	201.4
131.4	81	90.7	93.9	171	179.1	203.2
127.8	81	88.5	95.4	173.3	184.6	212.5
126.7	80.6	88	94.6	169.9	181.6	208.9
125.2	81.1	88	94.1	168.1	177.1	205.2
125.2	81.5	88	93.9	165	173.1	201.6

002- Appendix B2- Data and Calculation Forms (page 8 of 94)

Appliance Firebox Temperatures (F)		Outer Surface Tem				
left	bottom	door	ash door	left side	back	right side
236.5	346.8					
244	346.5					
244.8	333.1					
244.4	313.3					
245.8	293.2					
249.1	247.5					
253.4	260.8					
248.7	239					
260.8	238.8					
260.8	231.4					
257.7	225.3					
253.6	220.6					
250.7	216.9					
248	213.8					
245.8	211.3					
246	209.7					
243.3	208.2					
236.5	208					
236.8	209					
239	211.1					
241.3	213.3					
239.4	215.6					
232.5	217.8					
230	219.6					
227.8	221.4					
226.4	223.7					
225.1	225.9					
224.6	228					
223.3	230					
221.7	232					
219.7	234					
218.1	237.2					
215.8	240.6					
214.9	244.4					
212.5	248.4					
209.8	251.6					
207.7	254.1					
204.4	255.9					
200.8	257					
196.3	256.8					
197.6	257.5					
204.4	255					
200.8	253.8					
195.8	251.2					
190.9	249.4					

002- Appendix B2- Data and Calculation Forms (page 9 of 94)

peratures (F) front	Return Air Temp. (F)	DGM 1 In	DGM 1 Out	Filter 1 Temp.	DGM 2 In	DGM 2 Out
	77.7	75.6	75.6	79	75.7	75.6
	78.3	75.6	75.4	81.3	75.9	75.7
	78.1	75.7	75.7	83.3	76.3	75.7
	77.2	76.3	75.9	83.1	76.5	76.1
	77.2	76.3	76.3	82.8	76.6	76.3
	78.1	76.3	76.3	81.9	76.8	76.5
	77.9	76.6	76.5	81.3	77.2	76.6
	78.6	77	76.8	81	77.4	76.8
	78.8	77.2	77	81.3	77.5	77.2
	78.4	76.5	76.6	81.1	77.2	77
	77.9	76.3	76.5	80.6	77.2	77
	78.3	76.1	76.6	80.2	77.2	76.8
	78.1	76.6	77	80.1	77.5	77.2
	78.4	77	77	80.1	77.5	77.2
	79.3	77.2	77	79.9	77.7	77.4
	79	77	77.2	79.7	77.7	77.5
	79.3	77.4	77.4	79.3	77.9	77.5
	80.2	77.5	77.4	79.2	78.1	77.9
	79.7	77.9	77.9	79.9	78.4	78.1
	79.9	77.9	77.9	79.7	78.6	78.3
	79.2	78.1	78.1	79.2	78.6	78.4
	79.5	77.9	78.1	78.1	78.6	78.3
	79.9	78.1	78.1	78.3	78.8	78.4
	80.1	78.3	78.3	79.7	79	78.6
	79.3	78.1	78.3	80.8	78.8	78.6
	80.1	78.3	78.3	81.1	78.8	78.6
	79.5	78.1	78.3	81.3	78.6	78.6
	78.4	78.3	78.3	81.3	78.8	78.6
	79.5	78.3	78.1	81.3	78.6	78.4
	80.2	78.3	78.1	81.3	78.6	78.4
	80.1	77.7	78.1	81	78.3	78.6
	79.5	77.9	77.9	81	78.6	78.3
	78.3	78.1	78.1	81.1	78.6	78.3
	78.6	78.3	78.1	80.8	78.6	78.4
	79.3	77.9	78.1	80.8	78.4	78.3
	78.8	78.1	78.3	81	78.6	78.3
	76.8	77.9	78.1	80.6	78.3	78.1
	78.6	78.1	78.1	80.2	78.3	78.1
	79	78.3	78.3	80.4	78.6	78.1
	79.7	78.4	78.4	80.6	78.8	78.3
	79.5	78.6	78.6	80.4	78.6	78.3
	78.4	78.4	78.4	80.6	78.8	78.4
	78.3	78.6	78.6	80.2	78.6	78.4
	78.4	78.4	78.4	80.4	78.6	78.6
	79.2	78.4	78.3	80.2	78.6	78.3

002- Appendix B2- Data and Calculation Forms (page 10 of 94)

Filter 2	Open		Flue Gas Composition (%)		Fuel Weight	Oulet Duct
Temp.		CO	CO2	O2	(lbs)	pitot (in H2O)
78.30		0.48	4.49	15.24	45.62	0.0525
82.40		0.78	10.92	9.05	40.05	0.06
84.60		0.44	10.44	9.75	37.75	0.0525
84.00		0.67	10.03	10.16	35.1	0.0525
82.80		0.51	10.03	9.93	32.75	0.0525
82.20		0.44	9.85	10.16	30.5	0.0525
81.70		0.46	9.56	10.52	28.3	0.0525
81.70		0.41	9.8	10.29	26.1	0.0525
81.90		0.38	9.83	10.38	24	0.0525
81.50		0.25	9.31	11.38	22	0.0525
80.20		0.2	8.67	11.75	20.3	0.0525
79.70		0.23	8.74	11.54	18.7	0.0525
79.90		0.23	8.83	11.37	17.05	0.0525
79.90		0.27	8.84	11.19	15.7	0.0525
80.10		0.23	8.52	11.63	14.4	0.0525
79.50		0.22	7.63	11.87	13.3	0.0525
79.50		0.55	6.06	13.48	12.35	0.05
79.30		0.84	5.29	13.74	11.3	0.05
79.50		0.26	7.69	11.98	10.15	0.05
79.00		0.34	6.78	12.88	9.3	0.05
78.40		0.27	6.33	12.98	8.45	0.05
74.70		0.83	3.79	14.85	7.95	0.05
75.00		0.41	4.33	15.13	7.4	0.05
76.80		0.46	4.08	15.55	6.85	0.05
78.80		0.5	4.07	15.79	6.45	0.05
79.50		0.56	3.63	16.1	6	0.0475
80.10		0.56	3.69	16.15	5.5	0.0475
80.10		0.55	3.63	16.25	5.1	0.0475
80.20		0.55	3.39	16.29	4.7	0.0475
80.10		0.54	3.29	16.41	4.3	0.0475
80.20		0.39	3.55	16.23	3.9	0.0475
80.10		0.34	3.61	16.39	3.5	0.0475
80.10		0.33	3.69	16.54	3.05	0.0475
79.90		0.34	3.68	16.49	2.6	0.0475
79.70		0.4	3.49	16.45	2.35	0.0475
79.70		0.43	3.51	16.48	2	0.0475
79.30		0.42	3.4	16.81	1.65	0.0475
79.30		0.47	3.36	16.26	1.4	0.0475
79.30		0.46	3.37	16.33	1.15	0.0475
79.70		0.43	3.28	16.44	0.9	0.0475
79.90		0.42	3.29	16.53	0.7	0.0475
79.70		0.46	3.52	16.05	0.5	0.0475
79.70		0.45	3.49	16.13	0.3	0.0475
79.70		0.44	3.44	16.12	0.1	0.0475
79.50		0.48	3.51	16.25	0	0.0475

002- Appendix B2- Data and Calculation Forms (page 11 of 94)

F. BOX AVG
250.66
294.92
291.56
285.58
279.28
269
268.36
263.98
265.56
264.3
258.04
253.82
251.9
251.36
248.24
243.76
233.7
227.72
236.2
233.62
233.84
226.56
220.06
217.86
215.52
214.16
212.68
211.98
211.42
210.6
210.3
210.62
210.74
211.9
211.68
210.78
209.52
206.56
204.04
200.6
201.68
205.96
203
199.48
196

002- Appendix B2- Data and Calculation Forms (page 12 of 94)

2010-02-05 Witness 01

002- Appendix B2- Data and Calculation Forms (page 13 of 94)

Intertek Testing Services

SFBA EPA ADJUSTED EMISSION RESULTS

Manufacturer:	**SBI**			RESULTS	
Model:	**MAX Caddy**				
Date:	**2/5/10**			**Average emission rate:(gr/hr)**	**4.9**
Run:	**0**				
Project #:	**0**			Burn Rate (Dry kg/hr):	2.129
Test Duration:	**490**				
(minutes)					
PRESSURE FACTOR:		1.00902	BAROMETRIC PRESSURE		
				Average:	30.19
TEMPERATURE FACTORS				Start:	30.19
	DGM #1:	0.985431294		End:	30.19
	DGM #2:	0.984207936			
			DRY GAS METER VALUES		
VOLUMES SAMPLED				DGM #1 Final:	394.410
	DGM #1:	12.63650		Initial:	381.442
	DGM #2:	13.51372			
				DGM #2 Final:	386.266
TOTAL TUNNEL VOLUME (scf):		77345		Initial:	372.295
SAMPLE RATIOS			TEMPERATURES (DEG. RANKIN)		
Sample Train 1:		6120.769		DGM #1:	535.806
Sample Train 2:		5723.453		DGM #2:	536.472
TOTAL EMISSIONS			CALIBRATION FACTORS		
Sample Train 1 (g):		**39.79**		DGM #1:	0.9800
Sample Train 2 (g):		**40.06**		DGM #2:	0.9740
EMISSION RATES			TUNNEL FLOW RATE:		157.847
Sample Train 1 (g/hr):		**4.87**			
Sample Train 2 (g/hr):		**4.91**	PARTICULATE CATCH (mg)		
				Total Sample Train 1:	6.5
				Total Sample Train 2:	7
				Filter and seal Sample Train 1:	4
	MAX Allowed	7.50%		Filter and seal Sample Train 2:	4
				Probe Sample Train 1:	2.5
DEVIATION:		0.70%		Probe Sample Train 2:	3

	Train 1	Train 2				
			Room Particulate Correction			
Cs	0.000514383	0.000517992	Mr	0	Milligram Catch (mg)	
Cr	#DIV/0!	#DIV/0!	Vmr	0	Total Volume Sampled (dscf)	
Et	#DIV/0!	#DIV/0!			Rotometer (glass) at 100	
					flow rate is 0.12924 cfm	
Et	AVERAGE	#DIV/0!	Grams Emissions			

002- Appendix B2- Data and Calculation Forms (page 14 of 94)

Humidity	Temp. C	kg H_2O/kg air	Baro	Duct S.P.	Duct Abs.P
25%	18.5	0.0006	30.19	0.145	30.20
		(from Psychro.Chart)	in Hg	in H_2O	in Hg

Total Output	226,728	mJ	215,041	Btu
Output Rate	27,763	mJ/h	26,332	Btu/h
Total Input	345,578	mJ	327,764	Btu
EFFIC.	65.6%			

Time	lbs Load Wt.	C Outlet T	C Return T	mm H2O Duct Vel. P.	SQRT Vel. P.	Flow Rate m/sec	Volumetric Flow M^3/sec	Corrected to STP Std M^3/sec
0.00	46.6	41	26.38888889	1.3970	1.182	4.135	0.512	0.534
10.00	41.2	48.3888889	26.11111111	1.3970	1.182	4.184	0.518	0.553
20.00	39.2	45.7222222	26.38888889	1.2700	1.127	3.973	0.491	0.521
30.00	37.0	45.1111111	26.27777778	1.2700	1.127	3.969	0.491	0.519
40.00	34.8	44	26.22222222	1.2700	1.127	3.962	0.490	0.517
50.00	32.7	43.8888889	26.11111111	1.2700	1.127	3.961	0.490	0.516
60.00	30.8	43.1111111	26.22222222	1.2065	1.098	3.856	0.477	0.501
70.00	28.7	43.7222222	26.61111111	1.2065	1.098	3.860	0.477	0.503
80.00	26.7	43.2222222	26.38888889	1.2065	1.098	3.857	0.477	0.502
90.00	24.8	43	26	1.2065	1.098	3.855	0.477	0.501
100.00	23.1	42.1111111	26.38888889	1.2065	1.098	3.850	0.476	0.499
110.00	21.5	42	26.61111111	1.2065	1.098	3.849	0.476	0.499
120.00	20.0	41.7222222	26.27777778	1.2065	1.098	3.848	0.476	0.498
130.00	18.5	42.1111111	26.38888889	1.2065	1.098	3.850	0.476	0.499
140.00	17.1	41.1111111	25.77777778	1.2065	1.098	3.844	0.475	0.497
150.00	15.7	41.5	26	1.2065	1.098	3.846	0.476	0.498
160.00	14.3	42.3888889	26.22222222	1.2065	1.098	3.852	0.476	0.500
170.00	13.0	42.2222222	25.88888889	1.2065	1.098	3.851	0.476	0.499
180.00	12.0	41.1111111	26	1.2065	1.098	3.844	0.475	0.497
190.00	10.9	40.3888889	25.88888889	1.1430	1.069	3.737	0.462	0.482
200.00	10.1	39.3888889	26.27777778	1.2065	1.098	3.833	0.474	0.493
210.00	9.3	38.5	26.27777778	1.1430	1.069	3.726	0.461	0.477
220.00	8.6	38.2222222	26.22222222	1.1430	1.069	3.724	0.461	0.477
230.00	8.0	38	25.88888889	1.1430	1.069	3.723	0.461	0.476
240.00	7.2	38.2777778	25.88888889	1.1430	1.069	3.724	0.461	0.477
250.00	6.5	38.7222222	25.5	1.1430	1.069	3.727	0.461	0.478
260.00	5.8	38.1111111	25.11111111	1.1430	1.069	3.723	0.461	0.477
270.00	5.3	38.3888889	26	1.1430	1.069	3.725	0.461	0.477
280.00	4.8	38.7222222	25.77777778	1.1430	1.069	3.727	0.461	0.478
290.00	4.3	37.7777778	25.77777778	1.0795	1.039	3.617	0.447	0.462
300.00	3.9	36.7777778	25.11111111	1.0795	1.039	3.611	0.447	0.460
310.00	3.6	35.7777778	24.88888889	1.0795	1.039	3.605	0.446	0.458
320.00	3.2	35.1111111	24.77777778	1.0795	1.039	3.601	0.445	0.456
330.00	3.0	34.2777778	24.77777778	1.0795	1.039	3.596	0.445	0.455
340.00	2.8	34.7777778	24.22222222	1.0795	1.039	3.599	0.445	0.456
350.00	2.5	34.2222222	23.61111111	0.1905	0.436	1.511	0.187	0.191
360.00	2.2	33.5	24.11111111	1.0795	1.039	3.592	0.444	0.453
370.00	2.1	34.7777778	24	1.0795	1.039	3.599	0.445	0.456
380.00	1.9	33.7777778	24.22222222	1.0795	1.039	3.593	0.444	0.454
390.00	1.7	38.1111111	23.88888889	1.0795	1.039	3.619	0.448	0.463
400.00	1.4	33.3888889	23.88888889	1.0795	1.039	3.591	0.444	0.453
410.00	1.3	34.3888889	24	1.0795	1.039	3.597	0.445	0.455
420.00	1.1	36.6111111	23.77777778	1.0795	1.039	3.610	0.447	0.460
430.00	0.9	33.3888889	24.38888889	1.0795	1.039	3.591	0.444	0.453
440.00	0.7	33.7777778	24	1.0795	1.039	3.593	0.444	0.454
450.00	0.5	37.3888889	23.5	1.0795	1.039	3.614	0.447	0.462
460.00	0.4	36	23.88888889	0.1905	0.436	1.515	0.187	0.193
470.00	0.2	32.7777778	24.38888889	0.1905	0.436	1.507	0.186	0.190
480.00	0.1	33	23.77777778	1.0795	1.039	3.589	0.444	0.452
490.00	0.0	33.2222222	23.77777778	1.0795	1.039	3.590	0.444	0.452

002- Appendix B2- Data and Calculation Forms (page 15 of 94)

Pitot Factor		Duct area		Air Density @ STP	
0.8440	0.99	0.1237	M^2	1.204	kg/m^3

Mass Flow kg/hr	Enthalpy Change dh	Heat Rel. Rate de KJ/hr	Heat Rel. Rate de Btu/hr	Heat Out for Inter. KJ	Cumm. Heat Out KJ	Average Heat Out KJ/hr	Average Heat Out Btu/hr	TIME ON (sec) Unit on or off
2314.6	14.71	34,059	32,304	0	0	0	0	360
2397.8	22.44	53,796	51,023	7,295	7,295	**43,767**	**41,511**	off
2257.8	19.47	43,961	41,695	8,129	15,424	**46,271**	**43,886**	20
2251.3	18.97	42,701	40,499	7,222	22,645	**45,291**	**42,956**	off
2239.5	17.90	40,096	38,030	6,899	29,545	**44,317**	**42,032**	15
2238.3	17.90	40,075	38,010	6,681	36,226	**43,471**	**41,230**	off
2173.6	17.01	36,971	35,065	6,418	42,644	**42,644**	**40,445**	15
2179.9	17.23	37,566	35,630	6,211	48,855	**41,876**	**39,717**	off
2174.8	16.95	36,869	34,968	6,203	55,058	**41,293**	**39,165**	20
2172.5	17.12	37,195	35,277	6,172	61,230	**40,820**	**38,716**	off
2163.3	15.83	34,254	32,488	5,954	67,183	**40,310**	**38,232**	20
2162.2	15.50	33,510	31,783	5,647	72,831	**39,726**	**37,678**	off
2159.3	15.55	33,587	31,855	5,591	78,422	**39,211**	**37,190**	20
2163.3	15.83	34,254	32,488	5,653	84,075	**38,804**	**36,804**	off
2153.1	15.44	33,248	31,534	5,625	89,700	**38,443**	**36,461**	20
2157.1	15.61	33,672	31,936	5,577	95,277	**38,111**	**36,146**	off
2166.2	16.28	35,269	33,451	5,745	101,022	**37,883**	**35,930**	20
2164.5	16.45	35,604	33,769	5,906	106,928	**37,739**	**35,794**	off
2153.1	15.22	32,766	31,077	5,697	112,625	**37,542**	**35,606**	20
2088.4	14.60	30,497	28,925	5,270	117,895	**37,230**	**35,311**	30
2135.4	13.20	28,196	26,743	4,894	122,789	**36,837**	**34,938**	180
2069.6	12.31	25,474	24,161	4,470	127,259	**36,360**	**34,485**	360
2066.8	12.09	24,978	23,690	4,204	131,463	**35,854**	**34,005**	360
2064.6	12.20	25,182	23,884	4,180	135,643	**35,385**	**33,561**	420
2067.3	12.48	25,794	24,464	4,248	139,891	**34,973**	**33,170**	360
2071.8	13.32	27,588	26,166	4,448	144,340	**34,642**	**32,856**	360
2065.7	13.09	27,045	25,651	4,553	148,892	**34,360**	**32,589**	360
2068.5	12.48	25,808	24,478	4,404	153,297	**34,066**	**32,310**	360
2071.8	13.04	27,009	25,616	4,401	157,698	**33,792**	**32,050**	300
2004.3	12.09	24,222	22,973	4,267	161,965	**33,510**	**31,783**	240
1994.6	11.75	23,436	22,228	3,971	165,936	**33,187**	**31,476**	180
1985.0	10.97	21,768	20,645	3,767	169,703	**32,846**	**31,153**	120
1978.5	10.41	20,590	19,529	3,530	173,232	**32,481**	**30,807**	60
1970.5	9.57	18,853	17,881	3,287	176,519	**32,094**	**30,440**	60
1975.3	10.63	20,999	19,916	3,321	179,840	**31,736**	**30,100**	60
827.6	10.69	8,844	8,388	2,490	182,329	**31,256**	**29,645**	60
1963.0	9.46	18,562	17,605	2,342	184,671	**30,779**	**29,192**	60
1975.3	10.85	21,441	20,336	3,333	188,004	**30,487**	**28,916**	60
1965.7	9.62	18,917	17,942	3,363	191,367	**30,216**	**28,658**	60
2007.5	14.32	28,754	27,272	3,964	195,331	**30,051**	**28,502**	60
1962.0	9.57	18,771	17,804	3,951	199,282	**29,892**	**28,351**	60
1971.6	10.46	20,628	19,565	3,283	202,565	**29,644**	**28,116**	60
1993.0	12.92	25,758	24,431	3,863	206,429	**29,490**	**27,970**	60
1962.0	9.06	17,783	16,867	3,623	210,052	**29,310**	**27,799**	60
1965.7	9.85	19,357	18,359	3,095	213,147	**29,066**	**27,567**	60
2000.5	13.99	27,982	26,540	3,939	217,086	**28,945**	**27,453**	60
834.7	12.20	10,182	9,657	3,093	220,179	**28,719**	**27,239**	off
821.7	8.45	6,942	6,585	1,425	221,604	**28,290**	**26,832**	off
1958.2	9.29	18,188	17,250	2,054	223,659	**27,957**	**26,516**	off
1960.4	9.51	18,646	17,685	3,069	226,728	**27,763**	**26,332**	off

002- Appendix B2- Data and Calculation Forms (page 16 of 94)

Duct Flow CFM
1131.5
1172.1
1103.7
1100.6
1094.8
1094.2
1062.6
1065.7
1063.1
1062.0
1057.6
1057.0
1055.6
1057.6
1052.5
1054.5
1059.0
1058.1
1052.5
1020.9
1043.9
1011.7
1010.4
1009.3
1010.6
1012.8
1009.8
1011.2
1012.8
979.8
975.1
970.4
967.2
963.3
965.6
404.6
959.6
965.6
960.9
981.4
959.1
963.8
974.3
959.1
960.9
978.0
408.1
401.7
957.3
958.3

002- Appendix B2- Data and Calculation Forms (page 17 of 94)

E&E FUEL LOAD DATA SHEET

Manufacturer: SBI
Model: 0
Run #:
Test Date:

Control#: #REF!
Tech: C. Paré

Test Load Weight:

			Lower	Ideal	Upper
Firebox Volume:	4.5	cu. ft	40.50	45.00	49.50
Load Volume:	0.0000	cu. ft			

Loading Density: 10.369 lbs./ft3

Number of Spaces:
Spacer weight:

Load Density (wet): #DIV/0! lbs./ft3
Dry Wood Density: #DIV/0!

Piece Size: Thick	x Wide	x Length	Weight lbs	Meter Moisture Content Dry Uncorrected %			Ave. MC x Weight	Volume Cubic Inches
			9.06	19.20	22.80	20.80	20.93	0.00
			9.66	23.30	23.70	28.40	25.13	0.00
			6.80	21.90	21.00	22.20	21.70	0.00
			6.99	20.40	23.10	23.00	22.17	0.00
			6.49	18.10	20.40	23.70	20.73	0.00
			7.66	18.90	18.20	21.80	19.63	0.00
								0.00
								0.00
								0.00
								0.00
								0.00
								0.00
								0.00
								0.00
								0.00
								0.00
						SUM MCxWT	21.72	

Test Load Weight: 46.66 lbs.

Dry Weight: 17.39 kg.

Average Moisture Content: %

Dry: 21.72

21.72
Must be 18-28

Wet: 17.84
must be 15-25

Dry:

Coal Bed Range: 4.7 lbs. to 11.6 lbs. 10% to 25% of test load

TEST CHARGE:
Time loaded:_____ Coal bed weight:_____lbs.

Coal bed weight = % of test load weight

002- Appendix B2- Data and Calculation Forms (page 18 of 94)

Flue Temp. (F)	Room Temp. (F)	Tunnel Temp. (F)	Outlet air Temp. (F)	top	back	right
310.5	81.3000	156.2	105.8	192.6	215.1	241.7
296.4	82.9	161.4	119.1	444	220.6	242.2
248.4	82.6	124.7	114.3	405.3	231.3	231.6
243	82	120.7	113.2	398.8	228	221.9
234.7	81.3	117.1	111.2	382.3	222.1	214.5
233.6	80.8	116.6	111	374.9	216.7	210.9
226.6	81.7	113.7	109.6	361.8	212.4	209.8
233.6	82	115.2	110.7	376.9	209.7	210.6
227.5	81.7	113.7	109.8	370.4	211.3	212.2
226.8	80.6	113.4	109.4	368.8	212.9	215.2
215.8	80.4	110.1	107.8	347.5	216	217.2
212.9	81.7	109	107.6	338.4	216.7	219.4
208.6	81.3	107.8	107.1	329	216.1	221.4
210.2	81.7	108	107.8	332.6	215.2	224.6
199.2	81.1	105.4	106	322.7	217.6	227.1
205.9	80.6	106.3	106.7	325.8	218.1	228.4
215.2	81.1	108	108.3	337.1	217.4	231.4
207.7	82.4	106.5	108	359.2	216.3	233.8
192.9	81.3	103.3	106	324.1	214.7	232.5
186.6	82.8	101.8	104.7	308.8	210.6	229.6
169.3	81.9	98.8	102.9	289.6	207.3	226.8
165.4	81.1	100	101.3	259.5	204.4	223.5
179.6	80.8	106.5	100.8	246.4	202.1	221.5
178.9	82.6	106.9	100.4	239.5	204.1	223.9
192.9	80.8	112.6	100.9	243.5	206.8	229.1
198.1	81.1	114.4	101.7	251.8	211.5	238.5
183	79.9	105.1	100.6	249.3	216.9	247.1
178	81.7	113.7	101.1	239.9	219.4	254.1
178.3	83.8	109.6	101.7	237.6	221.7	260.8
163.8	80.8	100	100	229.5	222.1	263.3
154.9	81	97.9	98.2	213.3	219.7	259.9
146.8	80.4	93.9	96.4	201.9	213.6	254.1
139.6	78.8	91.6	95.2	194.7	208	246.9
132.8	79.2	89.4	93.7	186.4	200.5	238.1
133.5	79	88.5	94.6	185.9	201.7	242.2
131.5	78.3	87.8	93.6	180.9	197.4	236.8
128.3	78.1	86.7	92.3	176.9	189.1	226.9
130.3	77.7	86.2	94.6	184.8	196	237.9
127.4	78.8	86.2	92.8	176.4	183.9	222.4
127.6	76.5	85.1	100.6	195.1	195.3	240.8
125.8	77.9	85.3	92.1	171.9	180	216.3
126.7	77.7	84.9	93.9	178.7	186.3	224.1
123.6	77.4	84.4	97.9	182.1	184.5	224.2
124.3	78.1	84.7	92.1	168.4	176.9	211.3
124.7	77.9	84.6	92.8	171.7	180.9	216.5
123.1	77.4	84.2	99.3	185.7	186.4	227.8
121.1	77.4	83.8	96.8	176.7	178.9	217
118.9	77.9	83.5	91	162.1	171.1	203
118.9	77.5	83.1	91.4	162	172.9	205.2
118.6	77.5	82.6	91.8	163.8	174.2	205.5

002- Appendix B2- Data and Calculation Forms (page 19 of 94)

Appliance Firebox Temperatures (F)		Outer Surface Tem				
left	bottom	door	ash door	left side	back	right side
239.7	358					
248.9	365.4					
248.7	354.2					
244.4	334					
243.7	312.8					
244.8	293.5					
246.9	277					
250.2	262.8					
254.5	251.4					
258.3	242.6					
259.9	235.9					
260.8	231.6					
261.7	228.7					
262.9	226.6					
264.2	225					
265.6	223.3					
269.2	221.9					
270.1	220.6					
266.5	219.2					
259.9	217.8					
253.2	216.3					
244.9	215.2					
240.3	214.7					
240.8	215.1					
242.1	216.1					
246.2	218.8					
250	223					
252.3	228					
254.3	233.4					
255.2	238.8					
251.6	242.4					
245.5	244.6					
237.9	244.6					
230.2	243.7					
233.4	243					
228	241.7					
217.4	239.9					
224.8	237.2					
212.2	234.3					
226	231.1					
208	229.1					
214.2	226.8					
211.6	225.7					
201.4	224.6					
203.9	223.5					
209.8	222.4					
200.1	222.1					
189.3	221.4					
190.8	221					
190.8	220.8					

002- Appendix B2- Data and Calculation Forms (page 20 of 94)

peratures (F) front	Return Air Temp. (F)	DGM 1 In	DGM 1 Out	Filter 1 Temp.	DGM 2 In	DGM 2 Out
	79.5	76.5	76.5	80.6	76.8	76.6
	79	76.5	76.5	83.8	76.8	76.6
	79.5	76.5	76.8	85.5	77.2	76.8
	79.3	77	77	84.2	77.4	77.4
	79.2	76.8	77.2	83.3	77.4	77.4
	79	76.5	77	82.4	77.4	77.2
	79.2	76.6	77	82	77.5	77.4
	79.9	76.6	77	81.7	77.4	77.4
	79.5	77	77.2	81.7	77.5	77.4
	78.8	76.3	76.8	81.5	77.2	77.5
	79.5	76.3	76.8	81.1	77.2	77.4
	79.9	76.6	76.8	81	77.4	77.4
	79.3	76.8	77	80.8	77.5	77.4
	79.5	77	77	80.8	77.7	77.5
	78.4	76.8	77	80.6	77.7	77.7
	78.8	76.5	77	80.4	77.5	77.5
	79.2	76.6	77.2	80.2	77.4	77.7
	78.6	76.6	77.2	79.9	77.7	77.5
	78.8	76.5	77	79.7	77.4	77.5
	78.6	76.6	77.2	79.7	77.5	77.7
	79.3	76.8	77.2	79.7	77.7	77.7
	79.3	76.8	77.4	79.5	77.7	77.5
	79.2	76.6	77.4	78.4	77.4	77.9
	78.6	76.6	77.4	75.6	77.7	77.7
	78.6	76.5	77.2	75.9	77.5	77.5
	77.9	76.3	77	78.1	77.4	77.2
	77.2	75.6	76.5	79.2	76.8	77
	78.8	77.4	77	80.2	77.7	77.2
	78.4	78.6	78.1	82	78.6	77.9
	78.4	77.5	77.7	81.9	78.1	77.9
	77.2	76.8	77.2	81.1	77.7	77.7
	76.8	75.7	76.5	80.2	77	77.2
	76.6	75.4	75.9	79.3	76.6	76.8
	76.6	74.8	75.8	78.6	76.1	76.5
	75.6	74.5	75.4	78.1	75.9	75.9
	74.5	73.9	75	77.4	75.6	75.6
	75.4	73.4	74.3	76.6	75	75
	75.2	73.4	74.3	76.3	74.7	74.8
	75.6	73.4	74.1	76.1	74.5	74.7
	75	73.2	73.9	76.1	74.3	74.5
	75	73.4	73.9	76.1	74.3	74.5
	75.2	73	73.9	75.9	74.3	74.5
	74.8	73.2	73.8	75.9	74.1	74.3
	75.9	73.2	73.8	75.9	74.3	74.1
	75.2	73.2	73.9	75.7	74.3	74.3
	74.3	73.2	73.8	75.6	74.3	74.1
	75	73.2	73.8	75.6	74.1	74.1
	75.9	73.4	73.8	75.6	74.3	74.1
	74.8	73.2	73.6	75.6	74.1	74.1
	74.8	73.2	73.8	75.6	74.1	74.1

002- Appendix B2- Data and Calculation Forms (page 21 of 94)

Filter 2	Open		Flue Gas Composition (%)		Fuel Weight	Oulet Duct
Temp.		CO	CO2	O2	(lbs)	pitot (in H2O)
79.20		0.59	4.18	15.47	46.66	0.055
82.90		0.77	10.06	5.1	41.25	0.055
85.50		0.24	8.77	11.48	39.2	0.05
84.60		0.27	8.97	11.31	37	0.05
82.90		0.31	8.67	11.7	34.85	0.05
82.00		0.41	8.64	11.39	32.75	0.05
81.50		0.38	8.22	11.86	30.8	0.0475
81.10		0.38	9.02	11.01	28.7	0.0475
81.00		0.39	8.83	11.31	26.7	0.0475
80.40		0.33	8.73	11.26	24.8	0.0475
80.10		0.23	8.13	12.22	23.15	0.0475
80.20		0.23	8.31	11.97	21.55	0.0475
79.90		0.22	8.3	12.05	20	0.0475
79.90		0.31	8.35	11.86	18.5	0.0475
79.50		0.28	7.49	12.56	17.1	0.0475
79.20		0.45	8.48	11.2	15.75	0.0475
79.00		0.34	9.29	10.8	14.3	0.0475
79.00		0.22	8.21	11.4	13.05	0.0475
78.80		0.29	7.14	12.89	12	0.0475
78.30		0.41	7	12.86	10.9	0.045
78.10		0.58	5.6	12.66	10.15	0.0475
77.40		0.66	4.58	13.77	9.3	0.045
77.20		0.35	5.15	14.41	8.65	0.045
76.60		0.45	4.51	15	8.05	0.045
76.50		0.33	5.17	14.81	7.25	0.045
75.60		0.28	5.15	14.7	6.5	0.045
73.80		0.3	4.56	14.92	5.85	0.045
75.40		0.31	4.38	15.15	5.3	0.045
78.10		0.27	4.55	14.95	4.8	0.045
79.30		0.35	3.93	15.26	4.35	0.0425
79.30		0.46	3.76	15.69	3.95	0.0425
79.00		0.51	3.83	15.86	3.6	0.0425
78.60		0.47	3.82	15.92	3.25	0.0425
78.10		0.46	3.84	15.92	3	0.0425
77.40		0.49	3.85	15.94	2.8	0.0425
76.80		0.53	3.6	16	2.55	0.0075
76.50		0.53	3.5	16.06	2.2	0.0425
75.70		0.56	3.58	16.07	2.1	0.0425
75.70		0.54	3.5	16	1.95	0.0425
75.40		0.53	3.53	16.13	1.7	0.0425
75.20		0.52	3.22	16.29	1.45	0.0425
75.20		0.51	3.25	16.5	1.3	0.0425
75.20		0.51	3.21	16.41	1.1	0.0425
75.00		0.5	3.27	16.5	0.9	0.0425
75.20		0.5	3.2	16.57	0.75	0.0425
75.00		0.47	3.12	16.65	0.55	0.0425
74.80		0.44	2.95	16.76	0.4	0.0075
74.80		0.44	2.98	16.81	0.25	0.0075
74.80		0.44	2.99	16.92	0.15	0.0425
74.80		0.44	2.92	16.96	0	0.0425

002- Appendix B2- Data and Calculation Forms (page 22 of 94)

F. BOX AVG
249.42
304.22
294.22
285.42
275.08
268.16
261.58
262.04
259.96
259.56
255.3
253.38
251.38
252.38
251.32
252.24
255.4
260
251.4
245.34
238.64
229.5
225
224.68
227.52
233.36
237.26
238.74
241.56
241.78
237.38
231.94
226.42
219.78
221.24
216.96
210.04
216.14
205.84
217.66
201.06
206.02
205.62
196.52
199.3
206.42
198.96
189.38
190.38
191.02

0	45.62
10	40.05
20	37.75
30	35.1
40	32.75
50	30.5
60	28.3
70	26.1
80	24
90	22
100	20.3
110	18.7
120	17.05
130	15.7
140	14.4
150	13.3
160	12.35
170	11.3
180	10.15
190	9.3
200	8.45
210	7.95
220	7.4
230	6.85
240	6.45
250	6
260	5.5
270	5.1
280	4.7
290	4.3
300	3.9
310	3.5
320	3.05
330	2.6
340	2.35
350	2
360	1.65
370	1.4
380	1.15
390	0.9
400	0.7
410	0.5
420	0.3
	0.1
	0

002- Appendix B2- Data and Calculation Forms (page 23 of 94)

Furnace test Jan 12-2010

002- Appendix B2- Data and Calculation Forms (page 24 of 94)

Intertek Testing Services

SFBA EPA ADJUSTED EMISSION RESULTS

Manufacturer:	**SBI**	RESULTS	
Model:	**MAX Caddy**		
Date:	**1/12/10**	**Average emission rate:(gr/hr)**	**5.1**
Run:	**1 retake**		
Project #:	**3198245/20712-0000121**	Burn Rate (Dry kg/hr):	4.826
Test Duration:	**220**		
(minutes)			

PRESSURE FACTOR:	1.00167	BAROMETRIC PRESSURE			
				Average:	29.97
TEMPERATURE FACTORS				Start:	29.97
DGM #1:	0.974337002			End:	29.97
DGM #2:	0.972974012				
		DRY GAS METER VALUES			
VOLUMES SAMPLED			DGM #1	Final:	280.871
DGM #1:	6.65399			Initial:	273.914
DGM #2:	6.66096				
			DGM #2	Final:	250.539
TOTAL TUNNEL VOLUME (scf):	31345			Initial:	243.522
SAMPLE RATIOS		TEMPERATURES (DEG. RANKIN)			
Sample Train 1:	4710.645			DGM #1:	541.907
Sample Train 2:	4705.719			DGM #2:	542.666
TOTAL EMISSIONS		CALIBRATION FACTORS			
Sample Train 1 (g):	**20.73**			DGM #1:	0.9800
Sample Train 2 (g):	**16.47**			DGM #2:	0.9740
EMISSION RATES		TUNNEL FLOW RATE:			142.475
Sample Train 1 (g/hr):	**5.65**				
Sample Train 2 (g/hr):	**4.49**	PARTICULATE CATCH (mg)			
				Total Sample Train 1:	4.4
				Total Sample Train 2:	3.5
				Filter and seal Sample Train 1:	3.6
MAX Allowed	7.50%			Filter and seal Sample Train 2:	2.7
				Probe Sample Train 1:	0.8
DEVIATION:	22.89%			Probe Sample Train 2:	0.8

	Train 1	Train 2				
				Room Particulate Correction		
Cs	0.000661257	0.00052545		Mr	0	Milligram Catch (mg)
Cr	#DIV/0!	#DIV/0!		Vmr	0	Total Volume Sampled (dscf)
Et	#DIV/0!	#DIV/0!				Rotometer (glass) at 100
						flow rate is 0.12924 cfm
Et	AVERAGE	#DIV/0!	Grams Emissions			

002- Appendix B2- Data and Calculation Forms (page 25 of 94)

Humidity	Temp. C	kg H_2O/kg air
		(from Psychro.Chart)

Baro	Duct S.P.	Duct Abs.P
29.97	0.2	29.98
in Hg	in H_2O	in Hg

Pitot Factor	
0.8440	0.99

Total Output	197,948	mJ	187,744	Btu
Output Rate	53,986	mJ/h	51,203	Btu/h
Total Input	351,662	mJ	333,535	Btu
EFFIC.	56.3%			

Time	lbs Load Wt.	C Outlet T	C Return T	mm H2O Duct Vel. P.	SQRT Vel. P.	Flow Rate m/sec	Volumetric Flow M^3/sec	Corrected to STP Std M^3/sec	Mass Flow kg/hr	Enthalpy Change dh
0.00	47.3	46.200002	28.89999814	1.3970	1.182	4.185	0.518	0.553	2398.0	17.40
10.00	41.0	61.0999976	29.69999949	2.1590	1.469	5.322	0.658	0.737	3193.5	31.59
20.00	35.3	62.4000041	30.20000034	2.1590	1.469	5.332	0.660	0.741	3212.1	32.39
30.00	30.4	61.0999976	30.60000102	1.6510	1.285	4.654	0.576	0.644	2792.6	30.68
40.00	25.6	61.6000027	30.70000119	1.7780	1.333	4.833	0.598	0.670	2904.6	31.09
50.00	21.5	58.3999973	30.40000068	1.7780	1.333	4.810	0.595	0.661	2863.0	28.17
60.00	18.2	56.0000017	30.50000085	1.6510	1.285	4.618	0.571	0.630	2729.0	25.65
70.00	15.0	54.3000031	30.10000017	1.6510	1.285	4.606	0.570	0.625	2707.8	24.35
80.00	12.1	53.5000017	30.80000136	1.6510	1.285	4.601	0.569	0.622	2697.9	22.84
90.00	9.6	52.8000005	30.50000085	1.6510	1.285	4.596	0.569	0.620	2689.3	22.43
100.00	7.7	51.5999985	30	1.6510	1.285	4.587	0.567	0.617	2674.4	21.73
110.00	6.4	50.2000003	31.0000017	1.6510	1.285	4.577	0.566	0.613	2657.1	19.32
120.00	5.1	49.4999992	30.60000102	1.2700	1.127	4.010	0.496	0.536	2322.9	19.01
130.00	4.4	47.7000003	30.50000085	1.2700	1.127	3.999	0.495	0.531	2303.5	17.30
140.00	3.8	46.200002	30.10000017	1.2700	1.127	3.990	0.494	0.528	2287.4	16.20
150.00	3.0	44.5999993	30.10000017	0.1270	0.356	1.259	0.156	0.166	717.9	14.59
160.00	2.6	45.600001	29.39999898	1.2700	1.127	3.986	0.493	0.526	2280.9	16.30
170.00	2.1	45.1000002	28.89999814	1.2700	1.127	3.983	0.493	0.525	2275.5	16.30
180.00	1.8	43.700002	28.89999814	1.2700	1.127	3.974	0.492	0.522	2260.5	14.89
190.00	1.1	50.7000012	27.80000051	1.2700	1.127	4.018	0.497	0.539	2335.9	23.04
200.00	0.7	42.9000007	29.79999966	0.1270	0.356	1.255	0.155	0.164	712.1	13.18
210.00	0.4	43.799998	27.90000068	1.1430	1.069	3.771	0.466	0.495	2145.6	16.00
220.00	0.0	49.4999992	26.99999915	0.1270	0.356	1.268	0.157	0.169	734.6	22.64

002- Appendix B2- Data and Calculation Forms (page 26 of 94)

Duct area		Air Density @ STP
0.1237	M^2	1.204 kg/m^3

Total Output	
Output Rate	
Total Input	
EFFIC.	

Time	Heat Rel. Rate de KJ/hr	Heat Rel. Rate de Btu/hr	Heat Out for Inter. KJ	Cumm. Heat Out KJ	Average Heat Out KJ/hr	Average Heat Out Btu/hr	Unit on or off	Duct Flow CFM
0.00	41,735	39,583	0	0	0	0		1172.3
10.00	100,877	95,677	11,414	11,414	**68,485**	**64,955**		1561.1
20.00	104,052	98,688	17,077	28,491	**85,473**	**81,067**		1570.3
30.00	85,686	81,269	15,782	44,273	**88,545**	**83,981**		1365.2
40.00	90,289	85,635	14,663	58,935	**88,403**	**83,846**		1419.9
50.00	80,645	76,488	14,239	73,175	**87,810**	**83,283**		1399.6
60.00	70,006	66,397	12,540	85,715	**85,715**	**81,297**		1334.1
70.00	65,923	62,525	11,326	97,041	**83,178**	**78,891**		1323.7
80.00	61,610	58,434	10,627	107,668	**80,751**	**76,589**		1318.9
90.00	60,330	57,220	10,162	117,830	**78,553**	**74,504**		1314.6
100.00	58,114	55,118	9,870	127,700	**76,620**	**72,670**		1307.4
110.00	51,323	48,678	9,118	136,818	**74,628**	**70,781**		1298.9
120.00	44,166	41,890	7,953	144,771	**72,386**	**68,654**		1135.6
130.00	39,858	37,803	7,001	151,772	**70,048**	**66,438**		1126.1
140.00	37,047	35,138	6,408	158,180	**67,791**	**64,297**		1118.2
150.00	10,472	9,932	3,855	162,034	**64,814**	**61,473**		350.9
160.00	37,172	35,256	3,859	165,893	**62,210**	**59,003**		1115.0
170.00	37,085	35,173	6,188	172,082	**60,735**	**57,604**		1112.4
180.00	33,657	31,922	5,894	177,976	**59,325**	**56,267**		1105.1
190.00	53,812	51,038	7,264	185,239	**58,497**	**55,481**		1141.9
200.00	9,385	8,901	4,599	189,839	**56,952**	**54,016**		348.1
210.00	34,319	32,550	3,474	193,313	**55,232**	**52,385**		1048.9
220.00	16,627	15,770	4,636	197,948	**53,986**	**51,203**		359.1

002- Appendix B2- Data and Calculation Forms (page 27 of 94)

E&E FUEL LOAD DATA SHEET

Manufacturer: SBI
Model: 3198245/20712-0000121
Run #: 1 retake
Test Date: 12/01/2010

Control#: #REF!
Tech: C. Paré

Test Load Weight:

			Lower	Ideal	Upper
Firebox Volume:	4.5	cu. ft	40.50	45.00	49.50
Load Volume:	0.0000	cu. ft			

Loading Density: 10.520 lbs./ft3

Number of Spaces:
Spacer weight:

Load Density (wet): #DIV/0! lbs./ft3
Dry Wood Density: #DIV/0!

Piece Size: Thick	x Wide	x Length	Weight lbs	Meter Moisture Content Dry Uncorrected %			Ave. MC x Weight	Volume Cubic Inches
								0.00
			7.26	18.10	22.00	18.80	142.54	0.00
			6.67	21.90	19.00	23.00	142.07	0.00
			7.52	24.30	19.50	22.10	165.19	0.00
			8.28	20.60	21.00	28.30	192.92	0.00
								0.00
			6.50	17.60	18.80	25.50	134.12	0.00
			11.11	20.50	23.30	19.40	234.05	0.00
								0.00
								0.00
								0.00
								0.00
								0.00
								0.00
								0.00
								0.00
						SUM MCxWT	1010.889667	

Test Load Weight: 47.34 lbs.

Dry Weight: 17.69 kg.

Average Moisture Content: %

Dry: 21.35

21.35
Must be 18-28

Wet: 17.60
must be 15-25

Dry:

Coal Bed Range: 4.8 lbs. to 11.8 lbs. 10% to 25% of test load

TEST CHARGE:
Time loaded:_____ Coal bed weight:_____lbs.

Coal bed weight = % of test load weight

002- Appendix B2- Data and Calculation Forms (page 28 of 94)

Flue Temp. (F)	Room Temp. (F)	Tunnel Temp. (F)	Outlet air Temp. (F)	top	back	right
320.36	85.28	164.12	115.16	304.88	242.78	287.78
511.16	85.82	248.72	141.98	597.92	233.06	277.34
524.12	89.78	254.12	144.32	567.14	228.92	256.64
488.66	89.24	283.28	141.98	527.36	231.26	254.66
488.12	91.58	281.66	142.88	528.44	236.66	264.02
447.98	86.9	269.96	137.12	499.46	243.5	269.06
424.58	90.32	261.68	132.8	465.98	249.8	275.9
410.18	88.52	254.84	129.74	439.88	257.54	283.1
396.86	92.3	248.9	128.3	425.12	263.84	288.32
389.84	91.58	245.12	127.04	390.38	265.82	291.02
369.14	93.38	207.86	124.88	381.56	270.32	294.98
346.82	91.22	210.2	122.36	352.4	273.92	297.14
330.44	88.16	201.2	121.1	331.52	277.88	300.02
307.76	89.42	190.22	117.86	299.3	273.56	293.0
289.58	91.22	178.88	115.16	271.94	267.08	282.74
273.38	89.24	155.66	112.28	251.78	258.08	271.04
267.26	90.14	152.06	114.08	252.32	264.02	278.24
260.24	87.8	138.38	113.18	246.02	261.68	273.2
250.34	87.98	133.52	110.66	231.98	252.14	261.14
245.66	86.54	131.36	123.26	248.9	257.72	272.48
243.14	86.36	129.74	109.22	222.44	242.06	248.54
242.06	84.92	129.56	110.84	233.96	247.46	253.94
235.76	84.56	126.14	121.1	238.1	245.84	257.9

002- Appendix B2- Data and Calculation Forms (page 29 of 94)

Appliance Firebox Temperatures (F)		Outer Surface Tem				
left	bottom	door	ash door	left side	back	right side
308.84	399.74					
295.34	405.5					
278.42	388.76					
279.14	366.26					
284.9	346.64					
289.94	329.72					
296.6	316.22					
301.64	306.86					
307.04	300.74					
314.42	296.96					
322.7	295.7					
319.1	295.7					
316.22	297.14					
305.24	300.02					
292.1	301.64					
277.88	303.26					
282.92	306.5					
277.34	309.56					
267.26	311.54					
277.16	312.44					
256.28	312.44					
261.68	312.8					
263.12	313.34					

002- Appendix B2- Data and Calculation Forms (page 30 of 94)

peratures (F) front	Return Air Temp. (F)	DGM 1 In	DGM 1 Out	Filter 1 Temp.	DGM 2 In	DGM 2 Out
	84.02	78.8	79.34	83.84	79.88	80.06
	85.46	79.34	79.52	84.56	80.24	80.24
	86.36	79.7	79.88	86.18	80.96	80.96
	87.08	80.96	80.78	86.54	81.86	81.5
	87.26	80.78	80.6	84.92	81.5	81.5
	86.72	81.5	81.14	84.02	82.04	82.04
	86.9	82.04	82.04	83.48	82.76	82.58
	86.18	82.22	81.86	83.48	82.94	82.58
	87.44	82.58	82.4	83.48	83.3	83.12
	86.9	82.76	82.94	83.84	83.48	83.3
	86.0	83.12	83.3	84.02	83.84	83.66
	87.8	83.3	83.66	83.48	84.02	84.02
	87.08	83.48	83.84	84.2	84.02	84.2
	86.9	83.3	83.48	84.38	84.02	84.2
	86.18	83.48	83.66	84.2	84.02	84.02
	86.18	83.48	84.02	84.02	84.2	84.02
	84.92	82.94	83.3	83.12	83.66	83.84
	84.02	82.4	83.12	81.68	83.48	83.66
	84.02	81.86	82.22	81.5	83.12	83.3
	82.04	81.32	81.86	81.68	82.58	82.76
	85.64	80.96	81.68	81.86	82.22	82.4
	82.22	80.6	81.14	82.4	81.68	81.86
	80.6	80.24	80.78	82.4	81.32	81.68

002- Appendix B2- Data and Calculation Forms (page 31 of 94)

Filter 2	Open		Flue Gas Composition (%)		Fuel Weight	Oulet Duct
Temp.		CO	CO2	O2	(lbs)	pitot (in H2O)
81.5		0.31	3.88	16.2	47.34	0.055
81.86		1.59	15.43	3.41	41	0.085
83.12		0.26	14.4	5.79	35.35	0.085
84.38		0.15	12.83	7.44	30.45	0.065
82.58		0.14	12.63	7.67	25.65	0.07
82.76		0.14	10.43	9.84	21.55	0.07
82.4		0.12	9.56	10.72	18.2	0.065
81.86		0.13	8.83	11.52	15	0.065
81.86		0.13	8.18	12.02	12.15	0.065
81.68		0.1	8.04	12.09	9.6	0.065
81.5		0.11	6.78	13.18	7.75	0.065
81.32		0.14	5.86	14.14	6.4	0.065
82.04		0.19	5.05	15.15	5.15	0.05
81.68		0.25	4.18	15.89	4.45	0.05
81.14		0.35	3.65	16.36	3.8	0.05
80.96		0.44	3.22	16.82	3.05	0.005
80.6		0.44	2.9	17.15	2.6	0.05
80.24		0.46	2.72	17.34	2.1	0.05
79.52		0.44	2.45	17.67	1.8	0.05
77.9		0.4	2.38	17.8	1.15	0.05
76.82		0.39	2.4	17.79	0.75	0.005
76.82		0.37	2.29	17.95	0.4	0.045
76.46		0.34	2.1	18.15	0	0.005

002- Appendix B2- Data and Calculation Forms (page 32 of 94)

F. BOX AVG
308.803998
361.831995
343.97601
331.736002
332.132001
326.335999
320.900003
317.804004
317.012
311.720001
313.052008
307.652008
304.556
294.223993
283.1
272.408002
276.8
273.560001
264.812006
273.740002
256.351999
261.967999
263.659998

002- Appendix B2- Data and Calculation Forms (page 33 of 94)

Furnace test low burn rate 01-13-2010

002- Appendix B2- Data and Calculation Forms (page 34 of 94)

Intertek Testing Services

SFBA EPA ADJUSTED EMISSION RESULTS

Manufacturer:	**SBI**			RESULTS	
Model:	**MAX Caddy**				
Date:	**1/13/10**			**Average emission rate:(gr/hr)**	**6.4**
Run:	**0**				
Project #:	**3198245/20712-0000121**			Burn Rate (Dry kg/hr):	1.237
Test Duration:	**1120**				
(minutes)					
PRESSURE FACTOR:		1.00685	BAROMETRIC PRESSURE		
				Average:	30.125
TEMPERATURE FACTORS				Start:	30.06
	DGM #1:	0.98296468		End:	30.19
	DGM #2:	0.982272859			
			DRY GAS METER VALUES		
VOLUMES SAMPLED				DGM #1 Final:	318.041
	DGM #1:	36.04072		Initial:	280.882
	DGM #2:	47.27437			
				DGM #2 Final:	299.600
TOTAL TUNNEL VOLUME (scf):		213590		Initial:	250.524
SAMPLE RATIOS			TEMPERATURES (DEG. RANKIN)		
Sample Train 1:		5926.349		DGM #1:	537.151
Sample Train 2:		4518.091		DGM #2:	537.529
TOTAL EMISSIONS			CALIBRATION FACTORS		
Sample Train 1 (g):		**128.01**		DGM #1:	0.9800
Sample Train 2 (g):		**112.05**		DGM #2:	0.9740
EMISSION RATES			TUNNEL FLOW RATE:		190.705
Sample Train 1 (g/hr):		**6.86**			
Sample Train 2 (g/hr):		**6.00**	PARTICULATE CATCH (mg)		
				Total Sample Train 1:	21.6
				Total Sample Train 2:	24.8
				Filter and seal Sample Train 1:	12.8
	MAX Allowed	7.50%		Filter and seal Sample Train 2:	17.8
				Probe Sample Train 1:	8.8
DEVIATION:		13.30%		Probe Sample Train 2:	7

	Train 1	Train 2		Room Particulate Correction		
Cs	0.000599322	0.000524597		Mr	0	Milligram Catch (mg)
Cr	#DIV/0!	#DIV/0!		Vmr	0	Total Volume Sampled (dscf)
Et	#DIV/0!	#DIV/0!				Rotometer (glass) at 100
						flow rate is 0.12924 cfm
Et	AVERAGE	#DIV/0!	Grams Emissions			

002- Appendix B2- Data and Calculation Forms (page 35 of 94)

Humidity	Temp. C	kg H_2O/kg air	Baro	Duct S.P.
			30.06	0.145
		(from Psychro.Chart)	in Hg	in H_2O

Total Output	297,432	mJ	282,100	Btu
Output Rate	15,934	mJ/h	15,112	Btu/h
Total Input	458,981	mJ	435,321	Btu
EFFIC.	64.8%			

Time	lbs Load Wt.	C Outlet T	C Return T	mm H2O Duct Vel. P.	SQRT Vel. P.	Flow Rate m/sec
0.00	61.9	35.9000015	26.69999864	1.1430	1.069	3.718
10.00	59.4	39.1999986	27.09999932	1.2192	1.104	3.861
20.00	58.1	37.6000002	26.99999915	1.1430	1.069	3.728
30.00	56.8	37.1999995	27.09999932	1.2446	1.116	3.888
40.00	55.7	36.3999981	27.09999932	1.2065	1.098	3.823
50.00	54.1	38.2000012	26.99999915	1.1684	1.081	3.773
60.00	51.7	41.899999	27.09999932	1.1938	1.093	3.837
70.00	49.9	41.6999986	27.5	1.1684	1.081	3.794
80.00	47.9	41.3999981	26.79999881	1.1938	1.093	3.834
90.00	45.7	42.1999995	27.39999983	1.2192	1.104	3.879
100.00	43.5	42.1999995	27.39999983	1.1938	1.093	3.838
110.00	41.5	41.7999988	27.29999966	1.1938	1.093	3.836
120.00	39.5	41.7999988	27.60000017	1.1938	1.093	3.836
130.00	37.5	41.7999988	27.5	1.2446	1.116	3.917
140.00	35.6	42.1999995	27.80000051	1.2192	1.104	3.879
150.00	33.5	43.100001	27.90000068	1.2192	1.104	3.885
160.00	31.5	44.1999986	27.70000034	1.1938	1.093	3.851
170.00	29.4	44.5999993	27.70000034	1.2446	1.116	3.934
180.00	27.5	44.399999	27.29999966	1.2192	1.104	3.893
190.00	25.6	44.6999995	27.90000068	1.2446	1.116	3.935
200.00	23.8	44.5999993	28.20000119	1.2446	1.116	3.934
210.00	22.1	44.399999	27.70000034	1.2192	1.104	3.893
220.00	20.6	43.6000019	27.29999966	1.2446	1.116	3.928
230.00	19.5	41.899999	27.39999983	1.2192	1.104	3.877
240.00	18.4	40.7000012	27.60000017	1.1684	1.081	3.788
250.00	17.7	38.8999981	27.70000034	1.1684	1.081	3.777
260.00	16.9	37.6000002	28.10000102	1.1684	1.081	3.770
270.00	16.3	36.4999983	28.20000119	1.1684	1.081	3.763
280.00	15.6	35.7000012	27.60000017	1.1684	1.081	3.758
290.00	15.0	35.4000007	28.00000085	1.1684	1.081	3.756
300.00	14.4	35.2000003	28.00000085	1.1684	1.081	3.755
310.00	13.8	34.8999998	27.60000017	1.2065	1.098	3.814
320.00	13.1	34.6999995	27.39999983	1.2065	1.098	3.813
330.00	12.9	35.4000007	27.29999966	1.2065	1.098	3.817
340.00	12.6	35.7000012	26.89999898	1.2065	1.098	3.819
350.00	12.2	36.4999983	26.59999847	1.2700	1.127	3.923
360.00	11.9	34.6999995	27.39999983	0.0635	0.252	0.875
370.00	11.8	34.5999993	27.19999949	1.1430	1.069	3.710
380.00	11.6	34.5999993	27.29999966	1.1430	1.069	3.710
390.00	11.4	34.7999997	27.5	1.2065	1.098	3.813

002- Appendix B2- Data and Calculation Forms (page 36 of 94)

400.00	11.1	34.8999998	27.60000017	1.2065	1.098	3.814
410.00	10.9	34.8999998	27.39999983	1.2065	1.098	3.814
420.00	10.6	35.5000008	27.29999966	1.1430	1.069	3.716
430.00	10.5	37.3999998	26.59999847	0.0635	0.252	0.879
440.00	10.1	38.100001	26.59999847	0.0635	0.252	0.879
450.00	9.9	35.600001	26.39999814	1.1430	1.069	3.716
460.00	9.8	34.8999998	26.89999898	1.2065	1.098	3.814
470.00	9.7	34.5999993	26.89999898	1.2065	1.098	3.812
480.00	9.5	34.0999985	26.69999864	1.2065	1.098	3.809
490.00	9.3	37.1999995	26.39999814	0.0635	0.252	0.878
500.00	9.0	35.1000002	26.89999898	1.2065	1.098	3.815
510.00	8.9	34.0999985	26.69999864	1.2065	1.098	3.809
520.00	8.8	37.5	25.90000153	0.0635	0.252	0.879
530.00	8.6	34.6999995	26.59999847	1.2065	1.098	3.813
540.00	8.4	33.9999983	26.79999881	1.1430	1.069	3.707
550.00	8.2	37.5	25.80000136	0.0635	0.252	0.879
560.00	8.0	34.399999	26.59999847	1.2065	1.098	3.811
570.00	7.8	36.3999981	25.90000153	0.0635	0.252	0.877
580.00	7.6	34.5999993	26.4999983	1.2065	1.098	3.812
590.00	7.4	35.600001	25.90000153	0.0635	0.252	0.876
600.00	7.3	34.4999992	26.39999814	1.2065	1.098	3.811
610.00	7.1	35.8000014	25.70000119	0.0635	0.252	0.876
620.00	6.9	34.1999986	26.29999797	1.1430	1.069	3.708
630.00	6.8	36.9999992	25.70000119	0.0635	0.252	0.878
640.00	6.7	33.6000019	25.90000153	1.2065	1.098	3.806
650.00	6.5	35	25.50000085	1.2065	1.098	3.814
660.00	6.4	36.0000017	25	0.0635	0.252	0.877
670.00	6.2	33.4000015	25.60000102	1.2065	1.098	3.805
680.00	6.0	34.5999993	25.40000068	1.2065	1.098	3.812
690.00	5.8	36.7999988	24.89999983	0.0635	0.252	0.878
700.00	5.7	33.2000012	25.90000153	0.0635	0.252	0.873
710.00	5.5	33.799998	25.60000102	1.2065	1.098	3.807
720.00	5.3	37.1999995	24.59999932	0.0635	0.252	0.878
730.00	5.2	35.7000012	24.79999966	0.0635	0.252	0.876
740.00	5.1	33.100001	25.50000085	1.2065	1.098	3.803
750.00	4.9	34.1999986	25.10000017	1.2065	1.098	3.810
760.00	4.8	36.3999981	24.89999983	0.0635	0.252	0.877
770.00	4.6	33.0000008	25.60000102	0.0635	0.252	0.872
780.00	4.5	33.6000019	25.10000017	1.2065	1.098	3.806
790.00	4.3	36.9999992	24.59999932	0.0635	0.252	0.878
800.00	4.2	35.1000002	24.59999932	0.0635	0.252	0.875
810.00	4.0	33.100001	25.20000034	1.2065	1.098	3.803
820.00	3.8	34.8999998	24.79999966	1.2065	1.098	3.814
830.00	3.7	36.3999981	24.59999932	0.0635	0.252	0.877
840.00	3.6	33.3000014	25	0.0635	0.252	0.873
850.00	3.5	33.2000012	25	1.2065	1.098	3.803
860.00	3.4	36.9999992	24.29999881	0.0635	0.252	0.878
870.00	3.3	35.9000015	24.59999932	0.0635	0.252	0.876
880.00	3.1	32.6000002	25	0.0635	0.252	0.872
890.00	2.9	33.3000014	24.79999966	1.2065	1.098	3.804
900.00	2.7	36.7999988	24.39999898	0.0635	0.252	0.878
910.00	2.6	35.2000003	24.29999881	0.0635	0.252	0.875

002- Appendix B2- Data and Calculation Forms (page 37 of 94)

920.00	2.4	31.7999988	23.30000136	0.0635	0.252	0.871
930.00	2.3	32.0999993	23.20000119	1.2065	1.098	3.796
940.00	2.1	32.3999998	22.90000068	1.2065	1.098	3.798
950.00	1.9	33.5000017	22.39999983	1.2065	1.098	3.805
960.00	1.7	36.5999985	22.19999949	0.0635	0.252	0.877
970.00	1.5	36.200002	22.19999949	0.0635	0.252	0.877
980.00	1.4	35.8000014	21.89999898	0.0000	0.000	0.000
990.00	1.3	35.4000007	21.89999898	0.0000	0.000	0.000
1000.00	1.2	34.8999998	21.79999881	0.0000	0.000	0.000
1010.00	1.1	34.8999998	21.79999881	0.0000	0.000	0.000
1020.00	0.9	33.8999981	21.59999847	0.0000	0.000	0.000
1030.00	0.7	30.600001	21.89999898	1.1430	1.069	3.686
1040.00	0.6	31.200002	22.09999932	1.1430	1.069	3.690
1050.00	0.5	36.0000017	21.29999797	0.0000	0.000	0.000
1060.00	0.5	35.5000008	21.4999983	0.0000	0.000	0.000
1070.00	0.4	34.7999997	22.39999983	0.0000	0.000	0.000
1080.00	0.3	33.9999983	23.00000085	0.0000	0.000	0.000
1090.00	0.2	31.299998	23.60000186	1.1430	1.069	3.690
1100.00	0.2	35.7000012	23.00000085	0.0000	0.000	0.000
1110.00	0.1	35	23.30000136	0.0000	0.000	0.000
1120.00	0.0	31.5999985	23.60000186	1.1430	1.069	3.692

002- Appendix B2- Data and Calculation Forms (page 38 of 94)

Duct Abs.P	Pitot Factor		Duct area		Air Density @	
30.07	0.8440	0.99	0.1237	M^2	STP	
in Hg					1.204	kg/m^3

Volumetric Flow M^3/sec	Corrected to STP Std M^3/sec	Mass Flow kg/hr	Enthalpy Change dh	Heat Rel. Rate de KJ/hr	Heat Rel. Rate de Btu/hr	Heat Out for Inter. KJ	Cumm. Heat Out KJ
0.460	0.474	2056.1	9.26	19,030	18,049	0	0
0.478	0.498	2158.6	12.17	26,275	24,921	3,763	3,763
0.461	0.478	2074.0	10.66	22,116	20,976	4,027	7,790
0.481	0.498	2160.0	10.16	21,947	20,816	3,674	11,464
0.473	0.489	2118.5	9.36	19,820	18,798	3,479	14,943
0.467	0.485	2103.0	11.27	23,695	22,473	3,627	18,571
0.475	0.499	2163.7	14.89	32,215	30,555	4,650	23,221
0.469	0.493	2138.5	14.29	30,549	28,975	5,230	28,450
0.474	0.498	2158.6	14.69	31,704	30,070	5,187	33,638
0.480	0.505	2189.7	14.89	32,603	30,922	5,359	38,997
0.475	0.500	2166.8	14.89	32,261	30,598	5,405	44,402
0.475	0.499	2162.7	14.59	31,547	29,921	5,317	49,719
0.475	0.499	2162.7	14.29	30,894	29,302	5,203	54,923
0.485	0.509	2208.2	14.39	31,767	30,130	5,222	60,144
0.480	0.505	2189.7	14.49	31,721	30,086	5,291	65,435
0.481	0.507	2199.1	15.29	33,627	31,894	5,445	70,880
0.476	0.505	2187.5	16.60	36,310	34,438	5,829	76,709
0.487	0.516	2237.7	17.00	38,045	36,084	6,195	82,904
0.482	0.510	2212.7	17.20	38,064	36,102	6,343	89,247
0.487	0.517	2238.8	16.90	37,837	35,887	6,325	95,572
0.487	0.516	2237.7	16.50	36,919	35,016	6,230	101,802
0.482	0.510	2212.7	16.80	37,174	35,257	6,175	107,977
0.486	0.514	2227.2	16.40	36,521	34,638	6,141	114,118
0.480	0.504	2186.6	14.59	31,896	30,252	5,698	119,817
0.469	0.491	2128.4	13.18	28,049	26,603	4,992	124,809
0.467	0.487	2110.1	11.27	23,775	22,549	4,317	129,126
0.466	0.484	2096.9	9.56	20,040	19,007	3,650	132,776
0.465	0.481	2085.8	8.35	17,416	16,518	3,121	135,897
0.465	0.479	2077.7	8.15	16,930	16,058	2,862	138,759
0.465	0.479	2074.7	7.44	15,445	14,649	2,698	141,457
0.464	0.478	2072.7	7.24	15,013	14,239	2,538	143,995
0.472	0.485	2103.1	7.34	15,445	14,649	2,538	146,533
0.472	0.485	2101.1	7.34	15,430	14,634	2,573	149,106
0.472	0.486	2108.2	8.15	17,179	16,294	2,717	151,823
0.472	0.487	2111.3	8.85	18,691	17,727	2,989	154,812
0.485	0.502	2174.6	9.96	21,657	20,541	3,359	158,171
0.108	0.111	482.0	7.34	3,540	3,357	1,915	160,087
0.459	0.472	2044.0	7.44	15,216	14,432	1,556	161,643
0.459	0.472	2044.0	7.34	15,011	14,237	2,519	164,162
0.472	0.485	2102.1	7.34	15,437	14,641	2,537	166,700

002- Appendix B2- Data and Calculation Forms (page 39 of 94)

0.472	0.485	2103.1	7.34	15,445	14,649	2,573	169,273
0.472	0.485	2103.1	7.55	15,868	15,050	2,609	171,882
0.460	0.474	2053.0	8.25	16,936	16,063	2,735	174,617
0.109	0.113	488.4	10.86	5,306	5,033	2,024	176,641
0.109	0.113	490.0	11.57	5,669	5,377	915	177,556
0.460	0.474	2054.0	9.26	19,010	18,030	2,207	179,763
0.472	0.485	2103.1	8.05	16,926	16,053	2,997	182,761
0.472	0.485	2100.0	7.75	16,267	15,429	2,766	185,527
0.471	0.483	2094.9	7.44	15,595	14,791	2,655	188,182
0.109	0.113	487.9	10.86	5,301	5,028	1,970	190,152
0.472	0.486	2105.1	8.25	17,366	16,471	2,065	192,217
0.471	0.483	2094.9	7.44	15,595	14,791	2,746	194,964
0.109	0.113	488.6	11.67	5,702	5,408	2,058	197,021
0.472	0.485	2101.1	8.15	17,121	16,238	2,138	199,160
0.459	0.470	2038.0	7.24	14,762	14,001	2,655	201,814
0.109	0.113	488.6	11.77	5,751	5,455	2,002	203,816
0.471	0.484	2098.0	7.85	16,462	15,614	2,114	205,930
0.108	0.112	486.0	10.56	5,134	4,869	1,982	207,912
0.472	0.485	2100.0	8.15	17,112	16,230	2,016	209,928
0.108	0.112	484.1	9.76	4,724	4,481	1,928	211,856
0.471	0.484	2099.0	8.15	17,104	16,222	1,927	213,784
0.108	0.112	484.6	10.16	4,924	4,670	1,971	215,755
0.459	0.471	2040.0	7.95	16,213	15,377	1,905	217,660
0.109	0.112	487.4	11.37	5,541	5,255	2,034	219,694
0.471	0.482	2089.8	7.75	16,188	15,354	2,053	221,746
0.472	0.485	2104.1	9.56	20,109	19,073	3,024	224,770
0.108	0.112	485.1	11.07	5,368	5,091	2,225	226,995
0.471	0.482	2087.8	7.85	16,382	15,538	2,027	229,022
0.472	0.485	2100.0	9.26	19,436	18,434	2,984	232,006
0.109	0.112	487.0	11.97	5,830	5,529	2,288	234,294
0.108	0.110	478.5	7.34	3,514	3,333	777	235,071
0.471	0.483	2091.8	8.25	17,256	16,367	1,670	236,741
0.109	0.113	487.9	12.68	6,184	5,866	2,249	238,991
0.108	0.112	484.4	10.97	5,311	5,037	958	239,948
0.470	0.481	2084.7	7.65	15,939	15,117	1,992	241,941
0.471	0.484	2095.9	9.15	19,187	18,198	2,926	244,867
0.108	0.112	486.0	11.57	5,623	5,333	2,229	247,096
0.108	0.110	478.0	7.44	3,559	3,375	764	247,860
0.471	0.482	2089.8	8.55	17,870	16,949	1,711	249,572
0.109	0.112	487.4	12.47	6,080	5,767	2,258	251,829
0.108	0.111	483.0	10.56	5,101	4,838	931	252,761
0.470	0.481	2084.7	7.95	16,568	15,714	1,980	254,741
0.472	0.485	2103.1	10.16	21,369	20,267	3,160	257,901
0.108	0.112	486.0	11.87	5,769	5,472	2,377	260,278
0.108	0.110	478.7	8.35	3,997	3,791	813	261,090
0.470	0.481	2085.7	8.25	17,205	16,319	1,774	262,864
0.109	0.112	487.4	12.78	6,227	5,906	2,254	265,118
0.108	0.112	484.8	11.37	5,512	5,227	978	266,096
0.108	0.110	477.1	7.65	3,648	3,460	762	266,858
0.471	0.481	2086.7	8.55	17,844	16,924	1,730	268,589
0.109	0.112	487.0	12.47	6,074	5,761	2,255	270,843
0.108	0.111	483.2	10.97	5,298	5,025	947	271,791

002- Appendix B2- Data and Calculation Forms (page 40 of 94)

0.108	0.110	475.2	8.55	4,064	3,854	779	272,570
0.470	0.479	2074.5	8.95	18,574	17,616	1,860	274,430
0.470	0.479	2077.5	9.56	19,855	18,832	3,202	277,632
0.471	0.482	2088.8	11.17	23,325	22,122	3,598	281,230
0.109	0.112	486.5	14.49	7,047	6,684	2,753	283,982
0.108	0.112	485.5	14.08	6,838	6,486	1,157	285,140
0.000	0.000	0.0	13.98	0	0	568	285,707
0.000	0.000	0.0	13.58	0	0	0	285,707
0.000	0.000	0.0	13.18	0	0	0	285,707
0.000	0.000	0.0	13.18	0	0	0	285,707
0.000	0.000	0.0	12.37	0	0	0	285,707
0.456	0.462	2004.3	8.75	17,542	16,638	1,764	287,472
0.456	0.464	2010.2	9.15	18,403	17,454	2,995	290,467
0.000	0.000	0.0	14.79	0	0	2,005	292,472
0.000	0.000	0.0	14.08	0	0	0	292,472
0.000	0.000	0.0	12.47	0	0	0	292,472
0.000	0.000	0.0	11.07	0	0	0	292,472
0.457	0.464	2011.2	7.75	15,579	14,776	1,576	294,049
0.000	0.000	0.0	12.78	0	0	1,720	295,769
0.000	0.000	0.0	11.77	0	0	0	295,769
0.457	0.465	2014.2	8.05	16,210	15,375	1,663	297,432

002- Appendix B2- Data and Calculation Forms (page 41 of 94)

Average Heat Out KJ/hr	Average Heat Out Btu/hr	Unit on or off	Duct Flow CFM	reading	loses
0	0		1005.1		
22,578	21,414		1055.2		-21,414
23,371	22,166		1013.9		-752
22,928	21,746		1055.9		420
22,415	21,259		1035.6		487
22,285	21,136		1028.0		123
23,221	22,024		1057.7		-888
24,386	23,129		1045.4		-1,105
25,228	23,928		1055.2		-799
25,998	24,658		1070.5		-730
26,641	25,268		1059.2		-610
27,120	25,722		1057.2		-454
27,461	26,046		1057.2		-324
27,759	26,328		1079.5		-282
28,044	26,598		1070.5		-270
28,352	26,891		1075.0		-293
28,766	27,283		1069.3		-392
29,260	27,752		1093.9		-469
29,749	28,215		1081.7		-463
30,181	28,625		1094.4		-410
30,541	28,966		1093.9		-341
30,851	29,260		1081.7		-294
31,123	29,519		1088.8		-259
31,257	29,645		1068.9		-126
31,202	29,594		1040.5		52
30,990	29,393		1031.5		201
30,641	29,061		1025.1		332
30,199	28,643		1019.6		419
29,734	28,201		1015.7		441
29,267	27,758		1014.2		443
28,799	27,314		1013.2		444
28,361	26,899		1028.1		415
27,957	26,516		1027.1		383
27,604	26,181		1030.6		335
27,320	25,911		1032.1		270
27,115	25,717		1063.0		194
26,681	25,306		235.6		412
26,212	24,861		999.2		445
25,920	24,584		999.2		277
25,646	24,324		1027.6		260

002- Appendix B2- Data and Calculation Forms (page 42 of 94)

25,391	**24,082**		1028.1	242
25,154	**23,857**		1028.1	225
24,945	**23,659**		1003.6	197
24,648	**23,377**		238.7	282
24,212	**22,964**		239.5	413
23,968	**22,733**		1004.1	231
23,838	**22,610**		1028.1	123
23,684	**22,463**		1026.6	146
23,523	**22,310**		1024.1	153
23,284	**22,084**		238.5	226
23,066	**21,877**		1029.1	207
22,937	**21,755**		1024.1	123
22,733	**21,561**		238.9	193
22,546	**21,384**		1027.1	177
22,424	**21,268**		996.3	116
22,234	**21,088**		238.9	180
22,064	**20,927**		1025.6	162
21,885	**20,757**		237.6	169
21,717	**20,597**		1026.6	160
21,545	**20,434**		236.7	163
21,378	**20,276**		1026.1	158
21,222	**20,128**		236.9	149
21,064	**19,978**		997.3	150
20,923	**19,845**		238.3	133
20,789	**19,717**		1021.6	128
20,748	**19,678**		1028.6	39
20,636	**19,572**		237.1	106
20,509	**19,452**		1020.6	120
20,471	**19,416**		1026.6	36
20,373	**19,323**		238.0	93
20,149	**19,110**		233.9	213
20,006	**18,975**		1022.6	135
19,916	**18,889**		238.5	86
19,722	**18,705**		236.8	184
19,617	**18,606**		1019.1	100
19,589	**18,580**		1024.6	26
19,508	**18,502**		237.6	78
19,314	**18,318**		233.7	184
19,198	**18,208**		1021.6	110
19,126	**18,140**		238.3	68
18,957	**17,980**		236.1	160
18,870	**17,897**		1019.1	83
18,871	**17,898**		1028.1	-1
18,815	**17,845**		237.6	53
18,649	**17,688**		234.0	157
18,555	**17,599**		1019.6	89
18,497	**17,543**		238.3	55
18,351	**17,405**		237.0	138
18,195	**17,257**		233.2	149
18,107	**17,174**		1020.1	83
18,056	**17,125**		238.0	48
17,920	**16,997**		236.2	129

002- Appendix B2- Data and Calculation Forms (page 43 of 94)

17,776	**16,860**		232.3	137
17,705	**16,792**		1014.1	67
17,721	**16,808**		1015.6	-15
17,762	**16,846**		1021.1	-39
17,749	**16,834**		237.8	12
17,637	**16,728**		237.4	106
17,492	**16,591**		0.0	138
17,316	**16,423**		0.0	168
17,142	**16,259**		0.0	164
16,973	**16,098**		0.0	161
16,806	**15,940**		0.0	158
16,746	**15,883**		979.8	57
16,758	**15,894**		982.7	-11
16,713	**15,851**		0.0	43
16,555	**15,702**		0.0	150
16,400	**15,555**		0.0	147
16,248	**15,411**		0.0	144
16,186	**15,352**		983.2	59
16,133	**15,301**		0.0	51
15,987	**15,163**		0.0	
15,934	**15,112**		984.6	

002- Appendix B2- Data and Calculation Forms (page 44 of 94)

E&E FUEL LOAD DATA SHEET

Manufacturer: SBI
Model: 3198245/20712-0000121
Run #:
Test Date: 13/01/2010

Control#: #REF!
Tech: C. Paré

Test Load Weight:

			Lower	Ideal	Upper
Firebox Volume:	4.5	cu. ft	40.50	45.00	49.50
Load Volume:	0.0000	cu. ft			

Loading Density: 13.756 lbs./ft3

Number of Spaces:
Spacer weight:

Load Density (wet): #DIV/0! lbs./ft3
Dry Wood Density: #DIV/0!

Piece Size: Thick	x Wide	x Length	Weight lbs	Meter Moisture Content Dry Uncorrected %			Ave. MC x Weight	Volume Cubic Inches
			9.60	17.10	20.90	25.20	202.24	0.00
			6.28	17.50	20.80	25.20	132.93	0.00
			7.19	23.00	26.30	25.90	180.23	0.00
			8.26	17.60	20.80	24.20	172.36	0.00
			8.01	18.10	17.60	24.20	159.93	0.00
			8.94	20.90	18.50	28.60	202.64	0.00
			5.69	19.30	25.20	16.40	115.51	0.00
			7.93	17.10	21.20	25.90	169.70	0.00
								0.00
								0.00
								0.00
								0.00
								0.00
								0.00
								0.00
								0.00
						SUM MCxWT	1335.536667	

Test Load Weight: 61.90 lbs. **Dry Weight:** 23.09 kg.

Average Moisture Content: %

Dry: 21.58 — 21.58 (Must be 18-28) — Wet: 17.75 (must be 15-25)

Dry:

Coal Bed Range: 6.2 lbs. to 15.4 lbs. 10% to 25% of test load

TEST CHARGE:
Time loaded:_____ Coal bed weight:_____lbs.

Coal bed weight = % of test load weight

002- Appendix B2- Data and Calculation Forms (page 45 of 94)

Flue Temp. (F)	Room Temp. (F)	Tunnel Temp. (F)	Outlet air Temp. (F)	Appliance Firebox top	back	right	left	bottom
162.68	84.2	98.24	96.62	182.3	193.28	195.98	201.74	358.34
198.86	84.56	112.28	102.56	266.36	189.32	193.28	195.08	354.56
172.4	83.84	100.22	99.68	246.74	180.86	176.18	181.22	339.8
171.68	83.66	99.14	98.96	255.2	168.8	161.96	169.16	320.18
163.04	84.02	96.98	97.52	242.06	159.62	151.7	159.98	300.56
202.64	84.02	104.36	100.76	284.0	151.88	145.58	154.22	282.74
234.5	83.84	111.02	107.42	387.68	143.96	149.0	159.26	267.26
221.0	84.38	107.24	107.06	378.5	144.32	156.92	170.06	254.3
221.9	84.2	106.34	106.52	371.84	142.52	159.98	173.84	243.14
225.68	84.38	106.52	107.96	372.38	142.52	164.66	180.68	233.6
222.8	83.84	105.98	107.96	375.8	143.42	174.56	192.92	225.32
212.72	85.46	104.0	107.24	364.46	144.86	184.1	202.46	218.12
212.72	86.18	103.82	107.24	356.54	145.76	189.14	206.6	211.28
212.0	86.0	104.18	107.24	355.64	147.38	194.18	210.74	205.34
216.14	86.54	104.9	107.96	364.82	149.0	199.58	215.42	200.3
224.24	86.54	105.62	109.58	377.24	150.98	205.52	221.18	195.44
228.56	86.0	107.06	111.56	397.58	153.68	212.18	228.02	191.48
225.68	86.54	107.06	112.28	412.7	156.56	217.76	234.68	188.06
225.14	84.38	107.24	111.92	410.0	159.8	222.44	240.98	185.18
222.26	86.54	106.7	112.46	403.34	163.04	225.32	245.48	182.84
221.18	85.1	106.16	112.28	393.44	165.38	228.2	249.8	181.22
218.84	86.18	105.62	111.92	394.52	168.44	230.18	254.48	180.68
206.42	86.72	103.28	110.48	375.44	171.86	232.16	257.54	180.32
187.52	86.9	99.32	107.42	334.04	176.36	231.8	257.9	180.5
176.36	86.18	96.62	105.26	302.9	178.34	229.1	254.12	181.04
153.86	86.36	93.38	102.02	263.12	178.88	223.34	246.56	181.94
141.62	85.64	91.04	99.68	233.06	177.26	212.36	233.78	182.66
135.14	86.0	90.14	97.7	212.72	174.38	202.1	222.26	183.74
130.46	84.2	89.06	96.26	197.24	171.14	194.36	213.44	185.36
127.58	84.74	89.24	95.72	190.22	169.16	189.14	206.42	186.98
125.6	85.64	88.88	95.36	184.1	167.36	186.44	201.92	188.6
124.52	85.1	87.98	94.82	178.34	166.28	184.64	198.14	190.58
125.24	84.38	87.62	94.46	179.6	165.38	183.74	195.08	192.74
123.44	83.84	86.9	95.72	183.92	171.86	194.0	205.16	195.44
122.18	83.84	86.72	96.26	185.18	177.08	198.86	208.76	197.78
121.1	83.66	86.36	97.7	193.82	184.1	205.52	214.16	200.3
115.88	84.2	86.36	94.46	174.56	170.78	185.72	193.28	202.64
115.88	84.38	86.36	94.28	173.48	172.4	184.64	192.2	204.98
116.42	83.3	86.0	94.28	173.48	174.74	185.18	192.2	207.32
117.5	83.66	86.18	94.64	173.66	177.44	186.8	193.64	209.12

002- Appendix B2- Data and Calculation Forms (page 46 of 94)

Flue Temp. (F)	Room Temp. (F)	Tunnel Temp. (F)	Outlet air Temp. (F)	Appliance Firebox top	back	right	left	bottom
116.78	84.2	86.0	94.82	174.56	179.96	187.34	195.26	210.92
116.78	84.2	85.82	94.82	175.28	182.48	186.98	196.7	212.36
118.04	83.84	85.82	95.9	178.7	190.04	192.56	203.18	212.9
114.26	82.22	85.28	99.32	184.82	193.64	195.08	204.44	213.08
116.24	83.3	85.1	100.58	189.5	200.12	202.1	210.56	214.16
116.6	83.12	85.28	96.08	181.22	197.42	195.08	204.44	213.62
116.42	83.3	85.28	94.82	170.78	189.5	187.52	196.34	213.44
115.34	83.3	85.28	94.28	169.7	187.7	184.46	192.74	212.9
113.9	83.12	85.1	93.38	165.92	185.0	179.42	187.16	212.0
113.54	82.4	84.74	98.96	181.04	195.44	193.28	199.04	211.28
115.88	82.76	84.38	95.18	173.3	193.1	189.14	196.88	210.92
113.54	83.12	84.74	93.38	167.72	186.08	179.96	188.24	210.74
113.9	82.22	84.56	99.5	183.92	198.86	195.44	201.74	209.66
115.34	82.4	84.74	94.46	170.78	191.12	185.36	193.64	208.94
112.64	82.76	84.38	93.2	166.46	185.36	177.26	185.9	208.22
113.54	82.04	84.2	99.5	183.2	199.58	194.54	200.66	206.6
114.08	82.76	84.2	93.92	167.72	190.04	182.48	190.22	205.88
111.74	81.32	84.02	97.52	174.02	194.72	186.26	194.0	204.8
113.72	81.68	83.84	94.28	167.36	194.0	182.84	192.74	203.36
111.56	81.14	83.84	96.08	170.24	193.1	181.4	191.66	202.64
113.54	81.68	83.84	94.1	165.56	193.46	180.32	192.38	201.38
111.38	80.96	83.84	96.44	170.78	194.36	181.04	192.2	200.48
113.36	81.32	83.84	93.56	164.48	193.28	178.52	191.3	199.58
111.56	80.96	83.3	98.6	177.26	201.2	186.44	198.5	198.68
112.1	81.86	83.66	92.48	161.78	190.04	173.12	186.44	198.32
113.54	80.96	83.66	95.0	172.4	203.0	184.82	198.5	197.24
111.56	80.6	83.66	96.8	171.14	196.52	179.96	193.1	197.06
112.28	80.78	83.66	92.12	160.34	191.48	172.94	186.98	196.16
113.72	80.42	83.12	94.28	171.86	203.0	183.56	196.88	195.8
111.56	80.78	82.94	98.24	174.74	202.82	184.82	196.16	195.44
111.02	80.78	83.12	91.76	159.44	192.2	170.96	182.66	195.08
112.28	80.6	82.76	92.84	162.5	198.86	177.08	187.7	194.36
111.02	79.88	82.58	98.96	175.1	210.02	187.34	196.34	193.82
109.94	80.24	82.76	96.26	167.36	203.72	179.96	188.42	193.1
110.66	80.42	82.58	91.58	157.46	198.14	171.5	180.86	192.56
111.74	79.52	82.4	93.56	167.0	210.02	180.32	189.14	191.48
109.94	79.88	82.22	97.52	170.78	211.28	182.84	189.86	190.76
109.94	80.24	82.4	91.4	156.2	199.76	168.98	177.62	190.04
111.74	79.7	82.22	92.48	162.5	210.2	177.62	185.36	189.14
110.66	79.88	82.22	98.6	173.3	218.3	185.54	192.2	188.42

002- Appendix B2- Data and Calculation Forms (page 47 of 94)

Flue Temp. (F)	Room Temp. (F)	Tunnel Temp. (F)	Outlet air Temp. (F)	Appliance Firebox top	back	right	left	bottom
109.22	80.24	82.58	95.18	163.04	209.12	176.54	183.38	187.7
111.02	79.88	82.04	91.58	156.92	202.82	171.32	179.42	186.98
112.1	79.52	81.86	94.82	170.6	211.46	184.64	191.48	186.26
110.48	79.52	82.04	97.52	171.86	202.64	183.2	188.96	185.72
110.48	79.88	82.22	91.94	157.82	188.78	172.58	178.7	185.36
112.28	79.7	81.86	91.76	160.88	190.4	176.54	181.76	185.0
111.74	78.8	81.68	98.6	175.64	199.4	190.22	191.84	184.46
110.66	79.16	81.5	96.62	169.34	192.38	185.18	185.54	184.46
111.02	79.52	82.04	90.68	156.92	183.56	174.74	176.0	184.28
112.28	78.98	81.68	91.94	161.96	189.68	182.48	181.76	183.92
110.84	78.44	81.32	98.24	173.12	195.62	191.12	187.88	183.56
109.58	78.62	81.5	95.36	164.48	188.24	183.2	179.78	183.38
111.02	77.54	80.78	89.24	155.84	182.66	176.0	173.66	183.56
111.92	77.18	80.24	89.78	158.72	187.7	181.22	177.26	183.56
112.28	76.82	80.24	90.32	161.78	191.48	185.36	179.96	183.38
111.92	76.64	80.06	92.3	170.96	194.9	191.84	183.74	183.2
111.38	76.1	79.7	97.88	174.56	194.9	196.7	185.72	183.56
110.66	75.2	78.98	97.16	172.94	192.92	195.26	184.1	183.38
110.12	75.74	78.8	96.44	171.32	190.94	194.0	182.12	183.56
109.58	75.02	78.62	95.72	169.16	188.42	192.2	179.78	183.56
109.4	74.3	78.26	94.82	166.28	185.0	189.86	177.44	183.74
109.4	74.3	78.26	94.82	166.28	185.0	189.86	177.44	183.74
108.86	75.02	78.08	93.02	162.32	181.04	187.88	174.56	183.74
109.4	74.66	77.9	87.08	152.24	174.92	179.78	167.54	183.92
109.76	74.48	77.54	88.16	158.18	178.7	185.18	170.6	183.74
108.86	73.76	77.36	96.8	169.16	185.0	197.78	178.16	183.92
107.96	74.12	77.0	95.9	166.64	181.94	196.34	174.92	184.1
106.34	75.02	77.72	94.64	161.78	177.08	191.48	169.88	184.28
105.44	75.74	78.08	93.2	155.66	170.96	187.16	164.84	184.28
105.62	76.1	77.9	88.34	147.02	165.2	179.6	159.08	184.28
105.26	75.74	78.44	96.26	159.44	173.48	194.72	167.72	184.1
104.18	76.28	78.62	95.0	155.3	168.98	190.4	162.68	184.28
104.0	76.82	78.98	88.88	142.52	158.18	179.78	153.5	184.82

002- Appendix B2- Data and Calculation Forms (page 48 of 94)

Temperatures (F)		Outer Surface Temperatures (F)				Return Air	DGM 1	DGM 1
door	ash door	left side	back	right side	front	Temp. (F)	In	Out
						80.06	77.72	77.9
						80.78	78.08	77.9
						80.6	78.08	78.08
						80.78	78.08	78.08
						80.78	78.26	78.26
						80.6	78.08	78.26
						80.78	78.08	78.26
						81.5	78.44	78.44
						80.24	78.44	78.44
						81.32	78.8	78.8
						81.32	78.44	78.62
						81.14	78.62	78.44
						81.68	78.98	78.62
						81.5	79.16	78.98
						82.04	79.34	79.34
						82.22	79.52	79.34
						81.86	79.52	79.52
						81.86	79.52	79.7
						81.14	79.7	79.7
						82.22	79.88	79.88
						82.76	80.06	80.06
						81.86	79.7	79.88
						81.14	79.34	79.7
						81.32	79.52	79.88
						81.68	79.34	79.7
						81.86	79.34	79.52
						82.58	79.34	79.7
						82.76	79.7	79.7
						81.68	79.7	79.7
						82.4	79.7	79.7
						82.4	79.88	79.88
						81.68	79.88	79.88
						81.32	79.52	79.52
						81.14	78.8	79.16
						80.42	78.62	78.98
						79.88	78.44	78.8
						81.32	78.98	79.16
						80.96	78.8	78.98
						81.14	78.8	78.98
						81.5	78.98	78.98

002- Appendix B2- Data and Calculation Forms (page 49 of 94)

Temperatures (F)			Outer Surface Temperatures (F)			Return Air	DGM 1	DGM 1
door	ash door	left side	back	right side	front	Temp. (F)	In	Out
						81.68	78.98	79.16
						81.32	79.16	79.16
						81.14	79.16	79.16
						79.88	78.98	79.16
						79.88	78.8	78.98
						79.52	78.44	78.62
						80.42	78.44	78.8
						80.42	78.44	78.62
						80.06	78.44	78.62
						79.52	78.44	78.44
						80.42	78.44	78.62
						80.06	78.44	78.44
						78.62	78.44	78.44
						79.88	78.44	78.26
						80.24	78.44	78.44
						78.44	78.26	78.26
						79.88	78.26	78.26
						78.62	78.26	78.26
						79.7	78.26	78.26
						78.62	77.9	78.08
						79.52	77.9	78.26
						78.26	78.08	78.08
						79.34	77.9	78.08
						78.26	77.72	77.9
						78.62	77.54	77.72
						77.9	77.72	77.9
						77.0	77.54	77.72
						78.08	77.36	77.54
						77.72	77.36	77.54
						76.82	77.18	77.18
						78.62	77.18	77.18
						78.08	77.0	77.18
						76.28	76.82	77.18
						76.64	76.64	76.82
						77.9	76.64	76.82
						77.18	76.64	77.0
						76.82	76.64	76.82
						78.08	76.64	76.82
						77.18	76.46	76.64
						76.28	76.46	76.64

002- Appendix B2- Data and Calculation Forms (page 50 of 94)

Temperatures (F)			Outer Surface Temperatures (F)			Return Air	DGM 1	DGM 1
door	ash door	left side	back	right side	front	Temp. (F)	In	Out
						76.28	76.64	76.82
						77.36	76.46	76.64
						76.64	76.28	76.46
						76.28	76.28	76.64
						77.0	76.28	76.64
						77.0	76.1	76.28
						75.74	76.1	76.28
						76.28	76.1	76.28
						77.0	75.92	76.1
						76.64	75.92	76.1
						75.92	75.74	75.92
						75.74	75.74	75.74
						73.94	74.84	75.2
						73.76	73.94	74.84
						73.22	73.58	74.12
						72.32	73.22	73.94
						71.96	73.04	73.58
						71.96	72.68	73.22
						71.42	72.5	72.86
						71.42	72.14	72.5
						71.24	71.78	72.14
						71.24	71.78	72.14
						70.88	71.24	71.78
						71.42	71.24	71.42
						71.78	70.88	71.24
						70.34	70.88	71.24
						70.7	70.52	70.88
						72.32	71.42	71.6
						73.4	72.32	72.14
						74.48	72.68	72.32
						73.4	73.04	73.22
						73.94	73.4	73.4
						74.48	73.58	73.58

002- Appendix B2- Data and Calculation Forms (page 51 of 94)

Filter 1 Temp.	DGM 2 In	DGM 2 Out	Filter 2 Temp.	Open	Flue Gas Composition (%) CO	CO2	O2	Fuel Weight (lbs)
80.6	78.08	77.9	78.8		0.74	4.3	15.22	61.9
81.86	78.08	78.08	80.6		0.66	3.72	11.52	59.4
82.4	78.44	78.26	81.5		0.46	5.23	14.87	58.1
81.68	78.62	78.26	80.42		0.53	5.42	14.57	56.85
80.78	78.62	78.26	79.16		0.69	4.59	15.32	55.7
81.14	78.62	78.44	79.34		0.43	7.54	13.15	54.1
82.22	78.62	78.44	80.96		0.26	10.4	9.89	51.75
82.58	78.8	78.44	81.68		0.31	8.01	12.35	49.9
82.58	78.62	78.62	81.68		0.29	8.69	11.79	47.95
82.4	78.98	78.62	81.5		0.37	9.3	11.05	45.75
82.22	78.98	78.8	81.32		0.25	9.41	11.14	43.55
81.5	79.16	78.8	80.6		0.35	8.21	12.17	41.5
82.04	79.34	79.16	80.24		0.34	8.59	11.93	39.55
82.58	79.52	79.34	80.06		0.34	8.67	11.86	37.55
82.94	79.88	79.34	80.24		0.34	9.18	11.38	35.65
83.66	80.06	79.52	80.78		0.23	10.1	10.81	33.55
83.66	80.06	79.7	80.96		0.3	10.34	10.3	31.5
83.84	80.06	79.7	80.96		0.27	9.94	10.6	29.45
84.2	80.06	79.88	80.78		0.23	10.09	10.52	27.5
84.38	80.42	80.06	81.14		0.21	9.88	10.62	25.65
84.56	80.42	80.24	80.78		0.21	9.93	10.63	23.85
84.56	80.24	80.06	80.78		0.2	9.79	10.51	22.15
84.38	80.24	80.06	80.96		0.15	8.9	11.5	20.65
83.84	80.24	80.24	81.32		0.19	7.03	13.14	19.5
83.66	80.06	80.06	81.86		0.3	6.52	13.49	18.45
83.66	80.24	80.06	82.04		0.49	4.57	15.32	17.75
83.3	80.06	79.88	82.04		0.88	4.48	15	16.9
82.94	80.24	79.88	82.04		1.23	4.06	15.37	16.3
82.94	80.24	80.06	82.04		1.33	4.41	14.93	15.65
82.94	80.24	80.06	81.86		1.21	4.81	14.57	15.05
83.12	80.42	80.06	81.86		1.34	4.73	14.59	14.45
82.58	80.42	80.06	81.86		1.37	4.85	14.46	13.8
82.58	80.06	80.06	81.68		1.56	4.93	14.47	13.15
81.86	79.7	79.7	81.5		1.11	4.31	14.72	12.95
81.86	79.34	79.52	80.96		1.03	4.63	14.37	12.6
81.5	79.34	79.34	80.78		0.99	4.71	14.43	12.25
81.68	79.52	79.34	80.6		0.94	4.63	14.55	11.95
81.5	79.52	79.16	80.78		0.91	4.71	14.56	11.85
81.5	79.34	79.34	80.78		0.9	4.81	14.59	11.65
81.68	79.52	79.34	80.78		0.86	4.9	14.6	11.4

002- Appendix B2- Data and Calculation Forms (page 52 of 94)

Filter 1 Temp.	DGM 2 In	DGM 2 Out	Filter 2 Temp.	Open	Flue Gas Composition (%) CO	CO2	O2	Fuel Weight (lbs)
81.5	79.52	79.34	80.78		0.84	4.73	14.82	11.15
81.5	79.52	79.34	80.96		0.82	4.74	14.73	10.9
81.5	79.7	79.34	80.78		0.82	4.46	14.83	10.65
81.5	79.52	79.34	81.14		0.8	4.58	14.95	10.5
81.32	79.34	79.52	80.96		0.75	4.54	15.03	10.15
81.14	78.98	79.16	80.78		0.73	4.5	15.06	9.95
80.96	78.98	78.98	80.6		0.66	4.25	15.26	9.8
80.96	78.98	78.98	80.24		0.66	4.22	15.38	9.7
80.96	78.98	78.8	80.24		0.67	4.29	15.5	9.55
80.78	78.98	78.98	80.24		0.72	4.36	15.34	9.35
80.78	79.16	78.98	80.24		0.66	4.25	15.33	9.05
80.6	78.98	78.8	80.06		0.64	4.14	15.63	8.95
80.42	78.8	78.8	79.7		0.65	4.35	15.44	8.8
80.42	78.8	78.8	79.88		0.65	4.01	15.57	8.65
80.24	78.8	78.8	79.88		0.64	4.07	15.78	8.4
80.24	78.62	78.8	79.7		0.62	4.11	15.67	8.2
80.24	78.62	78.8	79.88		0.58	3.73	15.98	8
80.24	78.8	78.62	79.88		0.58	3.69	16.21	7.8
80.06	78.62	78.62	79.88		0.58	3.73	15.96	7.6
79.88	78.44	78.44	79.52		0.6	3.72	16.26	7.4
79.7	78.44	78.44	79.52		0.59	3.71	16.06	7.3
79.7	78.44	78.26	79.52		0.59	3.71	16.22	7.1
79.7	78.44	78.44	79.52		0.57	3.67	16.11	6.95
79.52	78.26	78.26	79.34		0.57	3.7	16.32	6.85
79.52	78.26	78.08	79.16		0.53	3.44	16.38	6.7
79.34	78.08	78.08	79.16		0.58	3.63	16.19	6.5
79.52	77.9	77.9	78.98		0.58	3.59	16.51	6.4
79.34	77.9	77.9	78.98		0.54	3.45	16.4	6.25
78.98	77.54	77.72	78.8		0.63	3.46	16.41	6
78.98	77.72	77.54	78.8		0.59	3.4	16.65	5.85
78.8	77.54	77.54	78.44		0.55	3.2	16.71	5.7
78.8	77.54	77.54	78.44		0.55	3.26	16.61	5.55
78.8	77.36	77.36	78.26		0.57	3.37	16.64	5.35
78.8	77.18	77.18	78.08		0.56	3.29	16.8	5.25
78.44	77.18	77.0	78.08		0.55	3.23	16.68	5.15
78.26	77.18	77.0	78.08		0.57	3.36	16.55	4.9
78.44	77.0	77.18	77.9		0.63	3.4	16.6	4.8
78.44	77.18	77.0	78.08		0.59	3.3	16.58	4.65
78.26	76.82	76.82	77.9		0.55	3.28	16.63	4.5
78.26	76.82	76.82	77.9		0.55	3.34	16.77	4.35

002- Appendix B2- Data and Calculation Forms (page 53 of 94)

Filter 1 Temp.	DGM 2 In	DGM 2 Out	Filter 2 Temp.	Open	Flue Gas Composition (%) CO	CO2	O2	Fuel Weight (lbs)
78.44	76.82	76.82	77.72		0.56	3.27	16.77	4.25
78.08	76.82	76.82	77.72		0.61	3.12	16.75	4.05
77.9	76.82	76.82	77.9		0.59	3.24	16.67	3.85
78.08	76.82	76.64	77.72		0.58	3.21	16.85	3.75
78.08	76.82	76.46	77.54		0.55	3.11	16.91	3.65
77.9	76.46	76.46	77.54		0.57	3.12	16.85	3.5
77.72	76.28	76.46	77.54		0.56	3.18	16.91	3.4
77.72	76.46	76.28	77.54		0.55	3.03	17.15	3.3
77.72	76.46	76.28	77.18		0.51	2.94	17.11	3.15
77.54	76.28	76.1	77.18		0.51	2.97	17.07	2.9
77.54	76.28	76.1	77.18		0.51	2.99	17.27	2.75
77.18	75.92	76.1	77.18		0.49	2.88	17.39	2.6
76.64	75.74	75.74	76.46		0.49	2.79	17.39	2.45
75.92	74.66	75.2	75.92		0.47	2.74	17.44	2.3
75.2	74.3	74.66	75.38		0.49	2.65	17.48	2.1
75.02	74.12	74.48	74.84		0.48	2.61	17.54	1.9
74.66	73.76	73.94	74.3		0.51	2.6	17.52	1.7
74.3	73.4	73.58	73.94		0.49	2.53	17.74	1.55
73.76	73.04	73.22	73.58		0.48	2.47	17.84	1.4
73.58	72.86	73.04	73.4		0.47	2.39	17.93	1.3
73.22	72.68	72.68	72.86		0.45	2.32	17.92	1.25
73.22	72.68	72.68	72.86		0.44	2.26	17.97	1.15
72.68	71.96	72.14	72.32		0.46	2.26	17.97	0.9
72.5	71.78	71.78	71.96		0.43	2.16	18.08	0.75
72.14	71.6	71.6	71.96		0.42	2.05	18.21	0.65
72.14	71.24	71.42	71.6		0.42	2.05	18.34	0.55
71.78	71.42	71.42	71.42		0.4	1.99	18.49	0.5
72.32	71.78	71.42	71.78		0.39	1.9	18.51	0.45
73.04	72.5	72.14	72.32		0.38	1.85	18.52	0.35
73.58	72.68	72.14	72.86		0.38	1.87	18.49	0.25
74.3	73.22	72.86	73.4		0.38	1.9	18.56	0.2
74.66	73.58	73.04	73.94		0.37	1.82	18.64	0.1
74.66	73.58	73.4	74.12		0.38	1.83	18.52	0

002- Appendix B2- Data and Calculation Forms (page 54 of 94)

Oulet Duct pitot (in H2O)	F. BOX AVG
0.045	226.328
0.048	239.719998
0.045	224.959998
0.049	215.060001
0.0475	202.783997
0.046	203.684
0.047	221.432001
0.046	220.820001
0.047	218.263998
0.048	218.768002
0.047	222.403998
0.047	222.8
0.047	221.864001
0.049	222.656003
0.048	225.824002
0.048	230.071997
0.047	236.587994
0.049	241.951999
0.048	243.679999
0.049	244.003998
0.049	243.608002
0.048	245.659995
0.049	243.464005
0.048	236.120001
0.046	229.099997
0.046	218.767999
0.046	207.823999
0.046	199.040002
0.046	192.308002
0.046	188.384
0.046	185.684003
0.0475	183.595999
0.0475	183.308005
0.0475	190.076001
0.0475	193.531998
0.05	199.580005
0.0025	185.395999
0.045	185.539996
0.045	186.584
0.0475	188.132001

002- Appendix B2- Data and Calculation Forms (page 55 of 94)

Oulet Duct pitot (in H2O)	F. BOX AVG
0.0475	189.607999
0.0475	190.759998
0.045	195.475995
0.0025	198.212003
0.0025	203.288
0.045	198.356
0.0475	191.516
0.0475	189.5
0.0475	185.9
0.0025	196.015997
0.0475	192.668002
0.0475	186.548004
0.0025	197.924002
0.0475	189.967999
0.045	184.639999
0.0025	196.916
0.0475	187.267999
0.0025	190.760001
0.0475	188.060001
0.0025	187.808002
0.0475	186.620004
0.0025	187.771997
0.045	185.432001
0.0025	192.415997
0.0475	181.939999
0.0475	191.192001
0.0025	187.556003
0.0475	181.579999
0.0475	190.220001
0.0025	190.796005
0.0025	180.068002
0.0475	184.1
0.0025	192.524002
0.0025	186.512003
0.0475	180.104001
0.0475	187.592001
0.0025	189.103998
0.0025	178.519995
0.0475	184.963998
0.0025	191.551999

002- Appendix B2- Data and Calculation Forms (page 56 of 94)

Oulet Duct pitot (in H2O)	F. BOX AVG
0.0025	183.955997
0.0475	179.492001
0.0475	188.888
0.0025	186.476001
0.0025	176.648001
0.0475	178.915997
0.0025	188.312
0.0025	183.379999
0.0025	175.1
0.0475	179.959998
0.0025	186.259998
0.0025	179.816
0.0025	174.344
0.0475	177.691998
0.0475	180.392001
0.0475	184.928
0.0025	187.087997
0.0025	185.720001
0	184.388
0	182.623999
0	180.464001
0	
0	
0.045	
0.045	
0	
0	
0	
0	
0.045	
0	
0	
0.045	

002- Appendix B2- Data and Calculation Forms (page 57 of 94)

Furnace Test medium High Jan 15-2010-02

002- Appendix B2- Data and Calculation Forms (page 58 of 94)

Intertek Testing Services

SFBA EPA ADJUSTED EMISSION RESULTS

Manufacturer:	**SBI**			RESULTS	
Model:	**MAX Caddy**				
Date:	**1/12/10**			**Average emission rate:(gr/hr)**	**6.1**
Run:	**4**				
Project #:	**3198245/20712-0000121**			Burn Rate (Dry kg/hr):	3.418
Test Duration:	**320**				
(minutes)					
PRESSURE FACTOR:		1.00067	BAROMETRIC PRESSURE		
				Average:	29.94
TEMPERATURE FACTORS				Start:	29.8
	DGM #1:	0.97798029		End:	30.08
	DGM #2:	0.976717202			
			DRY GAS METER VALUES		
VOLUMES SAMPLED				DGM #1 Final:	340.745
	DGM #1:	9.13602		Initial:	331.219
	DGM #2:	10.65051			
				DGM #2 Final:	326.635
TOTAL TUNNEL VOLUME (scf):		61712		Initial:	315.447
SAMPLE RATIOS			TEMPERATURES (DEG. RANKIN)		
Sample Train 1:		6754.749		DGM #1:	539.888
Sample Train 2:		5794.230		DGM #2:	540.586
TOTAL EMISSIONS			CALIBRATION FACTORS		
Sample Train 1 (g):		**26.34**		DGM #1:	0.9800
Sample Train 2 (g):		**38.24**		DGM #2:	0.9740
EMISSION RATES			TUNNEL FLOW RATE:		192.848
Sample Train 1 (g/hr):		**4.94**			
Sample Train 2 (g/hr):		**7.17**	PARTICULATE CATCH (mg)		
				Total Sample Train 1:	3.9
				Total Sample Train 2:	6.6
				Filter and seal Sample Train 1:	3.9
	MAX Allowed	7.50%		Filter and seal Sample Train 2:	6.6
				Probe Sample Train 1:	0
DEVIATION:		36.85%		Probe Sample Train 2:	0

	Train 1	Train 2				
			Room Particulate Correction			
Cs	0.000426882	0.000619689	Mr	0	Milligram Catch (mg)	
Cr	#DIV/0!	#DIV/0!	Vmr	0	Total Volume Sampled (dscf)	
Et	#DIV/0!	#DIV/0!			Rotometer (glass) at 100	
					flow rate is 0.12924 cfm	
Et	AVERAGE	#DIV/0!	Grams Emissions			

002- Appendix B2- Data and Calculation Forms (page 59 of 94)

Humidity	Temp. C	kg H_2O/kg air	Baro	Duct S.P.
			29.8	0.2
		(from Psychro.Chart)	in Hg	in H_2O

Total Output	210,816	mJ	199,949	Btu
Output Rate	39,528	mJ/h	37,490	Btu/h
Total Input	362,267	mJ	343,593	Btu
EFFIC.	58.2%			

Time	lbs Load Wt.	C Outlet T	C Return T	mm H2O Duct Vel. P.	SQRT Vel. P.	Flow Rate m/sec
0.00	48.6	44.7999997	28.20000119	1.4605	1.209	4.281
10.00	42.5	57.5	29.09999847	1.4605	1.209	4.366
20.00	37.4	61.4999983	28.9999983	1.7145	1.309	4.759
30.00	33.0	60.8999973	30	1.7780	1.333	4.842
40.00	29.1	57.9999966	29.39999898	1.4986	1.224	4.426
50.00	25.6	56.4000024	30.10000017	1.4986	1.224	4.415
60.00	22.2	55	29.39999898	1.4986	1.224	4.406
70.00	19.1	53.9999983	30	1.4986	1.224	4.399
80.00	16.4	52.8000005	29.69999949	1.4986	1.224	4.391
90.00	14.2	50	29.69999949	1.4605	1.209	4.316
100.00	12.3	49.6999995	29.09999847	1.2700	1.127	4.023
110.00	10.7	48.799998	28.89999814	1.2700	1.127	4.017
120.00	9.4	47.5	28.89999814	1.2700	1.127	4.009
130.00	8.4	45.5000008	28.70000203	1.2700	1.127	3.997
140.00	7.6	43.700002	28.89999814	1.2065	1.098	3.885
150.00	7.0	42.1999995	28.20000119	1.2065	1.098	3.875
160.00	6.3	41.5999985	28.40000153	1.1430	1.069	3.768
170.00	5.6	41.3999981	28.79999797	1.1430	1.069	3.767
180.00	5.1	40.7000012	28.40000153	1.1430	1.069	3.763
190.00	4.7	39.7999997	28.5000017	1.1430	1.069	3.758
200.00	4.2	39.399999	28.30000136	1.1430	1.069	3.755
210.00	3.7	39.2999988	28.30000136	1.1430	1.069	3.755
220.00	3.3	39.1999986	28.10000102	1.1430	1.069	3.754
230.00	2.8	39.1999986	28.60000186	1.1430	1.069	3.754
240.00	2.4	39.0999985	28.9999983	1.1430	1.069	3.753
250.00	2.1	38.2000012	28.40000153	1.1430	1.069	3.748
260.00	1.7	37.9000007	29.09999847	1.1430	1.069	3.746
270.00	1.4	37.0999993	28.10000102	1.1430	1.069	3.741
280.00	1.1	36.4999983	27.5	1.1430	1.069	3.738
290.00	0.8	35.8000014	27.39999983	1.1430	1.069	3.733
300.00	0.5	35.4000007	27.29999966	1.1176	1.057	3.689
310.00	0.2	35.1000002	27.09999932	1.1430	1.069	3.729
320.00	0.0	34.8999998	27.19999949	1.1430	1.069	3.728

002- Appendix B2- Data and Calculation Forms (page 60 of 94)

Duct Abs.P	Pitot Factor		Duct area		Air Density @	
29.81	0.8440	0.99	0.1237	M^2	STP	
in Hg					1.204	kg/m^3

Volumetric Flow M^3/sec	Corrected to STP Std M^3/sec	Mass Flow kg/hr	Enthalpy Change dh	Heat Rel. Rate de KJ/hr	Heat Rel. Rate de Btu/hr	Heat Out for Inter. KJ	Cumm. Heat Out KJ
0.530	0.567	2456.7	16.70	41,025	38,911	0	0
0.540	0.601	2606.4	28.57	74,466	70,627	9,550	9,550
0.589	0.663	2875.4	32.70	94,010	89,164	13,993	23,544
0.599	0.674	2920.2	31.09	90,777	86,098	15,402	38,945
0.547	0.611	2646.2	28.77	76,134	72,210	13,883	52,828
0.546	0.606	2627.0	26.46	69,505	65,922	12,135	64,963
0.545	0.602	2610.3	25.75	67,224	63,759	11,394	76,357
0.544	0.599	2598.4	24.14	62,735	59,501	10,829	87,186
0.543	0.596	2584.1	23.24	60,050	56,955	10,232	97,417
0.534	0.581	2518.2	20.42	51,426	48,775	9,282	106,699
0.498	0.541	2345.0	20.72	48,596	46,091	8,337	115,037
0.497	0.539	2335.2	20.02	46,749	44,339	7,945	122,982
0.496	0.535	2321.0	18.71	43,430	41,192	7,514	130,496
0.494	0.530	2299.4	16.90	38,861	36,858	6,856	137,352
0.481	0.513	2222.2	14.89	33,086	31,380	5,989	143,341
0.479	0.509	2206.4	14.08	31,075	29,473	5,346	148,687
0.466	0.494	2141.4	13.28	28,437	26,971	4,957	153,644
0.466	0.494	2139.4	12.68	27,118	25,720	4,630	158,274
0.465	0.492	2132.3	12.37	26,384	25,024	4,458	162,732
0.465	0.490	2123.1	11.37	24,135	22,891	4,210	166,942
0.465	0.489	2119.0	11.17	23,662	22,443	3,983	170,925
0.464	0.489	2118.0	11.07	23,438	22,230	3,925	174,850
0.464	0.488	2117.0	11.17	23,640	22,421	3,923	178,773
0.464	0.488	2117.0	10.66	22,575	21,411	3,851	182,624
0.464	0.488	2116.0	10.16	21,500	20,391	3,673	186,297
0.464	0.486	2106.8	9.86	20,771	19,700	3,522	189,820
0.463	0.485	2103.8	8.85	18,624	17,664	3,283	193,102
0.463	0.483	2095.7	9.05	18,974	17,996	3,133	196,236
0.462	0.482	2089.6	9.05	18,919	17,944	3,158	199,393
0.462	0.480	2082.5	8.45	17,598	16,691	3,043	202,436
0.456	0.474	2055.3	8.15	16,747	15,884	2,862	205,298
0.461	0.479	2075.4	8.05	16,703	15,842	2,788	208,086
0.461	0.478	2073.4	7.75	16,061	15,233	2,730	210,816

002- Appendix B2- Data and Calculation Forms (page 61 of 94)

Average Heat Out KJ/hr	Average Heat Out Btu/hr	Unit on or off	Duct Flow CFM	Delta (Gain)	Projected Final BTU
0	0		1200.9		
57,301	**54,347**	8	1274.1		
70,631	**66,990**	8	1405.6	12,642	
77,891	**73,876**	8	1427.6	6,886	
79,243	**75,158**	8	1293.6	1,282	
77,956	**73,937**	8	1284.2	-1,220	
76,357	**72,421**	8	1276.0	-1,517	
74,731	**70,878**	8	1270.2	-1,542	61,527
73,063	**69,297**	6	1263.2	-1,582	59,689
71,133	**67,466**	6	1231.0	-1,831	55,333
69,022	**65,464**	6	1146.3	-2,002	52,451
67,081	**63,623**	6	1141.6	-1,841	51,254
65,248	**61,885**	6	1134.6	-1,739	49,779
63,393	**60,125**	6	1124.0	-1,759	45,348
61,432	**58,265**	6	1086.3	-1,860	39,291
59,475	**56,409**	8	1078.6	-1,856	36,420
57,617	**54,647**	10	1046.8	-1,762	37,429
55,861	**52,982**	10	1045.8	-1,665	39,545
54,244	**51,448**	8	1042.4	-1,534	35,649
52,719	**50,001**	10	1037.9	-1,447	34,888
51,277	**48,634**	10	1035.9	-1,367	37,154
49,957	**47,382**	10	1035.4	-1,252	38,115
48,756	**46,243**	10	1034.9	-1,139	36,847
47,641	**45,185**	10	1034.9	-1,058	38,487
46,574	**44,173**	10	1034.4	-1,012	37,976
45,557	**43,208**	10	1029.9	-965	37,418
44,562	**42,265**	10	1028.4	-943	38,256
43,608	**41,360**	10	1024.5	-905	37,137
42,727	**40,525**	10	1021.5	-835	37,462
41,883	**39,724**	10	1018.0	-800	37,590
41,060	**38,943**	10	1004.7	-781	37,224
40,275	**38,199**	10	1014.6	-744	37,578
39,528	**37,490**		1013.6	-708	37,490

002- Appendix B2- Data and Calculation Forms (page 62 of 94)

E&E FUEL LOAD DATA SHEET

Manufacturer: SBI
Control#: 3198245/20712-0000121
Model: 3198245/20712-0000121
Tech: C. Paré
Run #:
Test Date: 12/01/2010

			Test Load Weight: Lower	Ideal	Upper
Firebox Volume:	4.5	cu. ft	40.50	45.00	49.50
Load Volume:	0.0000	cu. ft			

Loading Density: 10.798 lbs./ft3

Number of Spaces:
Spacer weight:

Load Density (wet): #DIV/0! lbs./ft3
Dry Wood Density: #DIV/0!

Piece Size: Thick	x Wide	x Length	Weight lbs	Meter Moisture Content Dry Uncorrected %			Ave. MC x Weight	Volume Cubic Inches
			6.60	23.10	25.90	29.30	172.26	0.00
			8.55	20.10	17.10	23.30	172.43	0.00
			10.16	19.00	17.80	21.70	198.12	0.00
			8.00	19.70	19.70	23.40	167.47	0.00
			8.15	19.00	22.10	17.50	159.20	0.00
			7.13	19.40	21.60	20.70	146.64	0.00
								0.00
								0.00
								0.00
								0.00
								0.00
								0.00
								0.00
								0.00
								0.00
								0.00
								0.00
						SUM MCxWT	1016.108667	

Test Load Weight: 48.59 lbs.
Dry Weight: 18.23 kg.

Average Moisture Content: %

Dry: 20.91
20.91
Must be 18-28
Wet: 17.30
must be 15-25

Dry:

Coal Bed Range: 4.9 lbs. to 12.1 lbs. 10% to 25% of test load

TEST CHARGE:
Time loaded:_____ Coal bed weight:_____lbs.

Coal bed weight = % of test load weight

002- Appendix B2- Data and Calculation Forms (page 63 of 94)

Flue Temp. (F)	Room Temp. (F)	Tunnel Temp. (F)	Outlet air Temp. (F)	top	back	right
277.16	86.18	148.28	112.64	284.36	255.92	281.3
452.66	84.2	238.1	135.5	522.14	241.52	272.48
475.7	84.92	252.68	142.7	618.44	240.8	266.72
468.86	85.28	248.54	141.62	586.22	241.34	269.96
437.36	86.18	220.82	136.4	516.92	245.12	275.18
423.5	86.54	206.6	133.52	481.64	245.84	279.14
414.86	85.28	198.14	131.0	470.3	246.38	282.74
400.1	85.64	185.54	129.2	453.02	248.72	287.24
387.14	86.54	180.5	127.04	431.06	249.8	289.94
356.0	85.1	167.0	122.0	411.62	256.1	290.66
348.44	85.28	163.04	121.46	386.06	258.08	291.2
335.66	86.0	157.82	119.84	365.72	258.8	290.12
320.9	84.38	150.62	117.5	338.9	257.0	285.98
295.88	84.92	141.62	113.9	306.14	254.3	277.16
273.92	84.74	133.88	110.66	275.54	248.36	264.02
260.96	86.72	129.56	107.96	250.88	240.44	251.78
260.24	85.1	129.2	106.88	241.34	232.7	240.98
259.7	85.46	129.02	106.52	236.48	227.3	234.5
250.52	85.1	125.78	105.26	228.56	223.16	229.82
236.84	84.74	122.0	103.64	214.88	219.92	224.6
235.22	85.28	120.74	102.92	210.02	215.6	219.74
234.86	85.28	120.56	102.74	205.52	212.0	216.68
234.86	84.92	120.74	102.56	206.42	209.66	213.8
229.82	86.54	119.12	102.56	203.72	206.78	211.46
221.18	87.26	116.78	102.38	198.86	204.08	208.58
213.62	85.64	114.62	100.76	190.94	200.48	204.08
207.5	86.36	112.64	100.22	184.1	196.7	199.4
203.0	85.28	111.74	98.78	175.82	192.2	193.82
196.88	84.56	109.76	97.7	171.68	187.7	188.6
192.92	83.3	108.14	96.44	166.46	182.84	183.56
189.14	83.66	106.7	95.72	163.4	178.52	179.24
186.98	83.48	105.98	95.18	160.88	175.1	175.28
184.64	83.66	105.44	94.82	157.82	171.32	172.22

002- Appendix B2- Data and Calculation Forms (page 64 of 94)

Appliance Firebox Temperatures (F)		Outer Surface Tem				
left	bottom	door	ash door	left side	back	right side
295.52	382.82					
280.94	388.22					
266.72	377.42					
265.1	359.42					
266.54	339.8					
266.18	322.16					
266.9	307.22					
270.68	295.34					
275.54	286.16					
278.24	279.5					
279.5	274.28					
280.58	270.68					
279.86	267.8					
275.9	265.1					
269.06	262.58					
258.26	260.6					
249.26	258.8					
247.1	257.36					
248.0	256.82					
247.46	257.0					
247.1	257.0					
249.44	257.0					
252.14	257.0					
253.76	257.36					
251.96	257.54					
242.6	257.9					
231.44	257.0					
221.36	256.1					
212.9	254.66					
205.52	253.22					
199.58	251.6					
194.9	250.52					
191.48	249.62					

002- Appendix B2- Data and Calculation Forms (page 65 of 94)

perature (F) front	Return Air Temp. (F)	DGM 1 In	DGM 1 Out	Filter 1 Temp.	DGM 2 In	DGM 2 Out
	82.76	78.62	78.44	83.84	78.8	78.8
	84.38	78.44	78.62	83.3	78.8	78.98
	84.2	78.62	78.62	84.38	79.16	79.16
	86.0	78.8	78.8	84.56	79.52	79.16
	84.92	78.8	78.8	84.02	79.52	79.52
	86.18	78.98	78.98	84.56	79.52	79.7
	84.92	78.98	79.16	84.02	80.06	79.88
	86.0	79.52	79.52	82.58	80.42	80.24
	85.46	79.7	79.7	82.4	80.6	80.6
	85.46	79.16	79.52	82.76	80.42	80.42
	84.38	79.7	79.88	82.4	80.6	80.6
	84.02	79.7	79.88	82.04	80.78	80.6
	84.02	79.16	79.52	82.4	80.24	80.42
	83.66	79.34	79.52	82.76	80.24	80.42
	84.02	79.16	79.34	81.86	80.24	80.42
	82.76	79.52	79.7	81.14	80.42	80.42
	83.12	79.52	79.7	80.06	80.42	80.6
	83.84	79.34	79.7	80.6	80.42	80.6
	83.12	79.34	79.52	80.42	80.42	80.6
	83.3	79.16	79.52	79.7	80.42	80.6
	82.94	79.16	79.52	79.16	80.42	80.42
	82.94	79.34	79.52	79.16	80.6	80.6
	82.58	79.16	79.52	80.24	80.24	80.42
	83.48	80.06	79.88	82.04	80.6	80.6
	84.2	82.04	81.5	83.84	82.04	81.68
	83.12	82.04	81.5	84.38	82.22	81.86
	84.38	82.58	81.86	84.38	82.58	82.22
	82.58	82.22	81.86	84.56	82.4	82.22
	81.5	81.68	81.68	84.02	82.04	82.04
	81.32	81.14	81.32	83.48	81.68	81.68
	81.14	80.96	81.14	82.94	81.5	81.5
	80.78	80.78	80.96	82.76	81.32	81.14
	80.96	80.42	80.78	82.58	80.96	80.96

002- Appendix B2- Data and Calculation Forms (page 66 of 94)

Filter 2		Flue Gas Composition (%)		Fuel Weight	Oulet Duct
Temp.	CO	CO2	O2	(lbs)	pitot (in H2O)
80.78	0.29	4.9	14.9	48.59	0.0575
80.96	0.98	15.12	4.28	42.5	0.0575
81.32	0.73	14.72	4.76	37.4	0.0675
80.06	0.32	14.2	6.24	33	0.07
79.34	0.18	11.76	9.05	29.15	0.059
79.52	0.19	11	9.85	25.6	0.059
79.16	0.18	10.46	10.53	22.25	0.059
77.72	0.18	9.69	10.94	19.1	0.059
77.9	0.15	9.09	11.34	16.4	0.059
78.44	0.16	7.56	12.58	14.25	0.0575
78.44	0.16	7.42	12.63	12.35	0.05
76.28	0.18	6.83	12.8	10.75	0.05
77.9	0.22	6.26	13.43	9.4	0.05
78.98	0.32	4.98	14.67	8.4	0.05
79.34	0.46	4.1	15.25	7.65	0.0475
78.8	0.52	3.82	15.78	7	0.0475
78.44	0.44	3.84	15.85	6.35	0.045
77.72	0.41	3.77	15.83	5.65	0.045
77.9	0.39	3.42	16.24	5.15	0.045
78.08	0.48	3.15	16.51	4.7	0.045
78.8	0.43	3.21	16.51	4.2	0.045
79.7	0.45	3.22	16.49	3.7	0.045
80.42	0.39	3.28	16.51	3.3	0.045
80.96	0.41	3.05	16.75	2.85	0.045
82.22	0.4	2.59	17.21	2.45	0.045
82.94	0.39	2.39	17.48	2.1	0.045
83.12	0.39	2.29	17.62	1.7	0.045
83.12	0.37	2.24	17.69	1.4	0.045
82.22	0.36	2.1	17.84	1.1	0.045
81.86	0.36	2.05	17.89	0.8	0.045
81.32	0.37	2.02	17.94	0.55	0.044
81.14	0.36	2	17.94	0.25	0.045
80.78	0.32	1.96	18.05	0	0.045

002- Appendix B2- Data and Calculation Forms (page 67 of 94)

F. BOX AVG
299.983994
341.060007
354.020004
344.407996
328.711993
318.992004
314.707996
310.999994
306.500003
303.223999
297.823999
293.179993
285.907996
275.720004
263.911996
252.392004
244.615994
240.547998
237.272003
232.772003
229.892004
228.128
227.804001
226.615997
224.204004
219.2
213.728
207.860004
203.107999
198.320001
194.468002
191.336002
188.492001

002- Appendix B2- Data and Calculation Forms (page 68 of 94)

Furnace Test medium High Jan 14-2010-02

002- Appendix B2- Data and Calculation Forms (page 69 of 94)

Humidity	Temp. C	kg H_2O/kg air	Baro	Duct S.P.	Duct Abs.P
			30.19	0.145	30.20
		(from Psychro.Chart)	in Hg	in H_2O	in Hg

Total Output	179,745	mJ	170,480	Btu
Output Rate	25,678	mJ/h	24,354	Btu/h
Total Input	356,127	mJ	337,770	Btu
EFFIC.	50.5%			

Time	lbs Load Wt.	C Outlet T	C Return T	mm H2O Duct Vel. P.	SQRT Vel. P.	Flow Rate m/sec	Volumetric Flow M^3/sec
0.00	48.2	38.3000014	25	1.2700	1.127	3.926	0.486
10.00	43.1	51.9999992	25.50000085	1.2446	1.116	3.971	0.491
20.00	40.4	47.2999997	26.20000203	1.0160	1.008	3.562	0.441
30.00	38.1	45.7000012	25.90000153	1.2700	1.127	3.972	0.491
40.00	35.8	44.399999	26.20000203	1.2192	1.104	3.884	0.480
50.00	33.7	44.1999986	26.29999797	1.2065	1.098	3.863	0.478
60.00	31.5	41.9999992	25.80000136	1.1684	1.081	3.788	0.469
70.00	29.4	41.899999	26.39999814	1.1684	1.081	3.787	0.469
80.00	27.3	42.3999998	26.0000017	1.1430	1.069	3.749	0.464
90.00	25.0	43.5000017	26.39999814	1.1430	1.069	3.756	0.465
100.00	23.0	43.4000015	26.20000203	1.1684	1.081	3.796	0.470
110.00	21.1	43.0000008	26.79999881	1.1430	1.069	3.753	0.464
120.00	19.2	42.7000003	26.10000186	1.1684	1.081	3.792	0.469
130.00	17.4	42.3999998	26.20000203	1.1430	1.069	3.749	0.464
140.00	16.0	41.200002	26.29999797	1.1430	1.069	3.742	0.463
150.00	14.7	40.3000005	26.20000203	1.1430	1.069	3.736	0.462
160.00	13.7	39.1999986	26.59999847	1.1430	1.069	3.730	0.461
170.00	12.5	37.9000007	26.39999814	1.1430	1.069	3.722	0.460
180.00	11.5	37.3999998	26.59999847	1.1430	1.069	3.719	0.460
190.00	10.6	36.5999985	26.0000017	1.1430	1.069	3.714	0.459
200.00	9.7	36.4999983	26.79999881	1.1430	1.069	3.714	0.459
210.00	9.0	36.4999983	27.29999966	1.1430	1.069	3.714	0.459
220.00	8.4	36.1000019	28.10000102	1.1430	1.069	3.711	0.459
230.00	7.8	35.8000014	27.5	1.1430	1.069	3.710	0.459
240.00	7.2	36.200002	27.60000017	1.1430	1.069	3.712	0.459
250.00	6.6	36.1000019	27.80000051	1.1430	1.069	3.711	0.459
260.00	6.0	36.0000017	27.5	1.1430	1.069	3.711	0.459
270.00	5.5	36.299998	27.80000051	1.1430	1.069	3.713	0.459
280.00	5.0	36.299998	27.60000017	1.1430	1.069	3.713	0.459
290.00	4.6	36.200002	27.60000017	1.1430	1.069	3.712	0.459
300.00	4.2	36.3999981	27.80000051	1.1430	1.069	3.713	0.459
310.00	3.8	36.899999	27.70000034	1.1430	1.069	3.716	0.460
320.00	3.4	36.7999988	27.80000051	1.1430	1.069	3.716	0.460
330.00	3.0	36.5999985	27.70000034	1.1430	1.069	3.714	0.459
340.00	2.6	36.5999985	27.80000051	1.1684	1.081	3.755	0.465
350.00	2.3	36.299998	27.80000051	1.1430	1.069	3.713	0.459
360.00	1.9	36.3999981	27.60000017	1.1430	1.069	3.713	0.459
370.00	1.6	36.0000017	27.29999966	1.1430	1.069	3.711	0.459
380.00	1.3	35.8000014	27.39999983	1.1430	1.069	3.710	0.459
390.00	0.9	35.7000012	27.39999983	1.1430	1.069	3.709	0.459
400.00	0.6	35.4000007	27.09999932	1.1430	1.069	3.707	0.459
410.00	0.3	35.1000002	26.99999915	1.1430	1.069	3.705	0.458
420.00	0.0	34.8999998	26.99999915	1.1430	1.069	3.704	0.458

002- Appendix B2- Data and Calculation Forms (page 70 of 94)

Pitot Factor		Duct area		Air Density @ STP	
0.8440	0.99	0.1237	M^2	1.204	kg/m^3

Corrected to STP Std M^3/sec	Mass Flow kg/hr	Enthalpy Change dh	Heat Rel. Rate de KJ/hr	Heat Rel. Rate de Btu/hr	Heat Out for Inter. KJ	Cumm. Heat Out KJ	Average Heat Out KJ/hr
0.503	2178.5	13.38	29,148	27,645	0	0	0
0.531	2301.4	26.66	61,354	58,191	7,474	7,474	**44,843**
0.469	2034.4	21.23	43,184	40,958	8,651	16,125	**48,375**
0.521	2257.5	19.92	44,968	42,650	7,358	23,483	**46,966**
0.507	2198.4	18.31	40,251	38,176	7,098	30,581	**45,871**
0.504	2184.9	18.01	39,344	37,316	6,633	37,213	**44,656**
0.491	2127.8	16.30	34,677	32,889	6,164	43,378	**43,378**
0.491	2126.8	15.59	33,163	31,453	5,653	49,031	**42,027**
0.486	2108.5	16.50	34,787	32,994	5,663	54,694	**41,021**
0.489	2119.6	17.20	36,462	34,583	5,937	60,631	**40,421**
0.494	2142.0	17.30	37,063	35,153	6,127	66,758	**40,055**
0.488	2114.6	16.30	34,461	32,685	5,959	72,718	**39,664**
0.493	2134.9	16.70	35,652	33,814	5,842	78,560	**39,280**
0.486	2108.5	16.30	34,363	32,592	5,834	84,394	**38,951**
0.484	2096.5	14.99	31,426	29,806	5,482	89,876	**38,518**
0.482	2087.5	14.18	29,611	28,084	5,086	94,962	**37,985**
0.479	2076.5	12.68	26,321	24,965	4,660	99,622	**37,358**
0.476	2063.6	11.57	23,874	22,643	4,182	103,804	**36,637**
0.475	2058.6	10.86	22,366	21,213	3,853	107,658	**35,886**
0.473	2050.7	10.66	21,867	20,740	3,686	111,344	**35,161**
0.473	2049.7	9.76	20,001	18,970	3,489	114,833	**34,450**
0.473	2049.7	9.26	18,970	17,992	3,248	118,080	**33,737**
0.472	2045.7	8.05	16,464	15,615	2,953	121,033	**33,009**
0.471	2042.7	8.35	17,056	16,177	2,793	123,826	**32,303**
0.472	2046.7	8.65	17,707	16,794	2,897	126,723	**31,681**
0.472	2045.7	8.35	17,081	16,201	2,899	129,622	**31,109**
0.472	2044.7	8.55	17,484	16,583	2,880	132,503	**30,578**
0.472	2047.7	8.55	17,510	16,607	2,916	135,419	**30,093**
0.472	2047.7	8.75	17,922	16,998	2,953	138,372	**29,651**
0.472	2046.7	8.65	17,707	16,794	2,969	141,341	**29,243**
0.473	2048.7	8.65	17,724	16,811	2,953	144,293	**28,859**
0.474	2053.6	9.26	19,007	18,027	3,061	147,354	**28,520**
0.474	2052.7	9.05	18,585	17,627	3,133	150,487	**28,216**
0.473	2050.7	8.95	18,360	17,414	3,079	153,565	**27,921**
0.478	2073.3	8.85	18,355	17,409	3,060	156,625	**27,640**
0.472	2047.7	8.55	17,510	16,607	2,988	159,614	**27,362**
0.473	2048.7	8.85	18,137	17,202	2,971	162,584	**27,097**
0.472	2044.7	8.75	17,896	16,973	3,003	165,587	**26,852**
0.471	2042.7	8.45	17,262	16,372	2,930	168,516	**26,608**
0.471	2041.7	8.35	17,048	16,169	2,859	171,376	**26,365**
0.470	2038.8	8.35	17,023	16,146	2,839	174,215	**26,132**
0.470	2035.8	8.15	16,589	15,734	2,801	177,016	**25,905**
0.469	2033.8	7.95	16,163	15,330	2,729	179,745	**25,678**

002- Appendix B2- Data and Calculation Forms (page 71 of 94)

Average Heat Out Btu/hr	Time ON Unit on or off	Duct Flow CFM	reading
0		1065.0	
42,531	3	1125.1	-42,531
45,881	3	994.5	-3,350
44,545	3	1103.6	1,336
43,506	3	1074.7	1,039
42,354	0	1068.1	1,152
41,142	3	1040.2	1,212
39,860	3	1039.7	1,282
38,906	3	1030.8	954
38,337	3	1036.2	569
37,990	3	1047.1	347
37,619	4	1033.7	371
37,255	4	1043.6	364
36,943	2	1030.8	312
36,533	2	1024.9	411
36,027	2	1020.5	506
35,433	2	1015.1	594
34,748	2.5	1008.8	684
34,036	2.5	1006.4	712
33,349	2.5	1002.5	687
32,674	3	1002.0	675
31,998	3	1002.0	676
31,307	4	1000.0	691
30,637	6	998.6	670
30,048	6	1000.5	590
29,506	6	1000.0	542
29,001	6	999.6	504
28,542	7	1001.0	459
28,123	7	1001.0	419
27,735	7	1000.5	387
27,371	9	1001.5	364
27,050	9	1003.9	321
26,762	9	1003.4	288
26,482	9	1002.5	280
26,215	9	1013.5	267
25,952	10	1001.0	263
25,701	10	1001.5	251
25,468	10	999.6	233
25,236	10	998.6	231
25,006	10	998.1	230
24,785	10	996.7	221
24,569	10	995.2	216
24,354	10	994.2	215

002- Appendix B2- Data and Calculation Forms (page 72 of 94)

Manufacturer:	**SBI**	**Tech:**	C. Paré		Reading Interval	10
Model:	**MAX Caddy**					
Date:	**1/14/10**					
Run:	**3**					
Control #:	**3198245/20712-0000121**					
Test Duration:	**420**					
Output Category:	Cat II	Start	End			
	Barometer (in.Hg):	30.18	30.1			
	Dry Bulb (F):					
	Humidity (%):					
Average Stove Temperature:		0.00				
Moisture content of wood (wet basis):		18.12				
	Average	0.59	5.34	15.43	215.91	87.15
*	*	*	*	*	*1	*2
Elapsed Time	Weight Remaining	CO	CO_2	O_2	Flue Gas	Room Temp
0	48.3	0.45	4.45	15.29	237.20	82.22
10	43.1	0.48	14.48	4.85	449.24	83.30
20	40.4	0.79	4.93	13.77	365.36	84.02
30	38.1	0.49	7.16	13.13	330.26	84.38
40	35.8	0.86	5.31	13.41	322.34	83.12
50	33.7	0.75	5.94	12.75	312.26	81.50
60	31.5	0.46	6.98	12.87	209.84	82.94
70	29.4	0.45	8.67	10.70	222.08	81.50
80	27.3	0.39	9.22	10.32	229.10	82.76
90	25.0	0.53	9.75	9.61	235.94	83.12
100	23.0	0.35	9.25	10.48	228.92	82.58
110	21.1	0.30	8.79	11.29	221.72	82.22
120	19.2	0.37	9.06	10.87	227.84	84.92
130	17.4	0.27	8.67	11.27	218.48	83.84
140	16.0	0.21	7.54	12.82	200.12	83.48
150	14.7	0.24	7.21	13.15	188.78	84.02
160	13.7	0.54	6.20	13.70	178.70	83.66
170	12.5	1.06	4.54	14.42	161.42	83.66
180	11.5	1.00	4.44	14.73	156.56	83.30
190	10.6	0.94	4.88	14.70	153.68	82.94
200	9.7	0.75	5.43	14.21	155.84	83.30
210	9.0	1.07	4.01	15.42	149.00	83.30
220	8.4	1.04	3.75	15.66	142.88	82.58

002- Appendix B2- Data and Calculation Forms (page 73 of 94)

230	7.8	1.04	3.72	15.73	143.24	84.02
240	7.2	0.87	3.93	15.99	153.86	83.12
250	6.6	0.82	3.68	16.34	152.96	84.56
260	6.0	0.80	3.73	16.36	152.42	85.28
270	5.5	0.81	3.62	16.31	153.32	83.48
280	5.0	0.49	3.34	16.69	160.70	82.58
290	4.6	0.45	3.31	16.77	160.88	83.66
300	4.2	0.40	3.26	16.79	161.60	83.66
310	3.8	0.43	3.06	16.91	193.82	83.84
320	3.4	0.43	2.86	17.18	190.94	82.94
330	3.0	0.45	2.71	17.33	190.22	83.66
340	2.6	0.42	2.74	17.35	186.80	84.02
350	2.3	0.41	2.49	17.69	183.20	83.12
360	1.9	0.40	2.49	17.69	203.18	82.94
370	1.6	0.37	2.35	17.84	201.02	81.86
380	1.3	0.38	2.28	17.95	197.96	81.50
390	0.9	0.38	2.25	18.00	195.80	81.86
400	0.6	0.37	2.20	18.09	192.92	81.86
410	0.3	0.34	2.19	18.13	191.12	81.50
420	0.0	0.32	2.18	18.23	188.96	81.14

002- Appendix B2- Data and Calculation Forms (page 74 of 94)

Minutes							
116.06	107.17	0.00	0.00	0.00	0.00	0.00	0.00
*3	*4						
Tunnel	Outlet	door	ash door	left side	back	right side	front
Dry Bulb	air						
130.82	100.94	0.00	0.00	0.00	0.00	0.00	0.00
230.54	125.60	0.00	0.00	0.00	0.00	0.00	0.00
183.38	117.14	0.00	0.00	0.00	0.00	0.00	0.00
166.64	114.26	0.00	0.00	0.00	0.00	0.00	0.00
162.68	111.92	0.00	0.00	0.00	0.00	0.00	0.00
155.48	111.56	0.00	0.00	0.00	0.00	0.00	0.00
105.08	107.60	0.00	0.00	0.00	0.00	0.00	0.00
107.06	107.42	0.00	0.00	0.00	0.00	0.00	0.00
108.68	108.32	0.00	0.00	0.00	0.00	0.00	0.00
110.48	110.30	0.00	0.00	0.00	0.00	0.00	0.00
108.86	110.12	0.00	0.00	0.00	0.00	0.00	0.00
107.60	109.40	0.00	0.00	0.00	0.00	0.00	0.00
109.22	108.86	0.00	0.00	0.00	0.00	0.00	0.00
106.52	108.32	0.00	0.00	0.00	0.00	0.00	0.00
102.20	106.16	0.00	0.00	0.00	0.00	0.00	0.00
99.86	104.54	0.00	0.00	0.00	0.00	0.00	0.00
97.52	102.56	0.00	0.00	0.00	0.00	0.00	0.00
94.82	100.22	0.00	0.00	0.00	0.00	0.00	0.00
94.28	99.32	0.00	0.00	0.00	0.00	0.00	0.00
92.84	97.88	0.00	0.00	0.00	0.00	0.00	0.00
92.66	97.70	0.00	0.00	0.00	0.00	0.00	0.00
91.94	97.70	0.00	0.00	0.00	0.00	0.00	0.00
91.40	96.98	0.00	0.00	0.00	0.00	0.00	0.00

002- Appendix B2- Data and Calculation Forms (page 75 of 94)

91.76	96.44	0.00	0.00	0.00	0.00	0.00	0.00
93.92	97.16	0.00	0.00	0.00	0.00	0.00	0.00
93.74	96.98	0.00	0.00	0.00	0.00	0.00	0.00
94.10	96.80	0.00	0.00	0.00	0.00	0.00	0.00
93.92	97.34	0.00	0.00	0.00	0.00	0.00	0.00
95.18	97.34	0.00	0.00	0.00	0.00	0.00	0.00
95.18	97.16	0.00	0.00	0.00	0.00	0.00	0.00
95.54	97.52	0.00	0.00	0.00	0.00	0.00	0.00
100.04	98.42	0.00	0.00	0.00	0.00	0.00	0.00
99.68	98.24	0.00	0.00	0.00	0.00	0.00	0.00
99.68	97.88	0.00	0.00	0.00	0.00	0.00	0.00
99.14	97.88	0.00	0.00	0.00	0.00	0.00	0.00
98.24	97.34	0.00	0.00	0.00	0.00	0.00	0.00
110.48	97.52	0.00	0.00	0.00	0.00	0.00	0.00
109.58	96.80	0.00	0.00	0.00	0.00	0.00	0.00
108.68	96.44	0.00	0.00	0.00	0.00	0.00	0.00
108.32	96.26	0.00	0.00	0.00	0.00	0.00	0.00
107.60	95.72	0.00	0.00	0.00	0.00	0.00	0.00
107.06	95.18	0.00	0.00	0.00	0.00	0.00	0.00
105.98	94.82	0.00	0.00	0.00	0.00	0.00	0.00

002- Appendix B2- Data and Calculation Forms (page 76 of 94)

5.34	0.00	0.59	0.00	0.00	340.185	82.38	82.42
	*				*	*	*
			Door	Ash door	DGM 1	DGM 1	DGM 1
			temp	Temp	Reading	Inlet T	Outlet T
4.45		0.45	0.00	0.00	318.065	76.28	76.64
14.48		0.48	0.00	0.00	318.332	76.82	76.64
4.93		0.79	0.00	0.00	318.603	77.18	77.00
7.16		0.49	0.00	0.00	318.870	77.54	77.54
5.31		0.86	0.00	0.00	319.132	77.90	77.90
5.94		0.75	0.00	0.00	319.379	77.18	77.18
6.98		0.46	0.00	0.00	319.566	77.36	77.36
8.67		0.45	0.00	0.00	319.798	77.72	77.72
9.22		0.39	0.00	0.00	320.047	77.00	77.18
9.75		0.53	0.00	0.00	320.356	77.72	77.54
9.25		0.35	0.00	0.00	320.620	77.54	77.54
8.79		0.30	0.00	0.00	320.924	77.00	77.18
9.06		0.37	0.00	0.00	321.226	77.36	77.54
8.67		0.27	0.00	0.00	321.506	77.90	77.90
7.54		0.21	0.00	0.00	321.851	78.26	78.08
7.21		0.24	0.00	0.00	322.227	78.62	78.44
6.20		0.54	0.00	0.00	322.503	78.44	78.44
4.54		1.06	0.00	0.00	322.831	78.98	78.62
4.44		1.00	0.00	0.00	323.239	79.52	78.98
4.88		0.94	0.00	0.00	323.600	79.16	78.98
5.43		0.75	0.00	0.00	323.950	79.16	79.16
4.01		1.07	0.00	0.00	324.330	79.34	79.16
3.75		1.04	0.00	0.00	324.659	79.16	79.34

002- Appendix B2- Data and Calculation Forms (page 77 of 94)

3.72		1.04	0.00	0.00	325.009	79.34	79.16
3.93		0.87	0.00	0.00	325.321	79.52	79.34
3.68		0.82	0.00	0.00	325.643	79.52	79.52
3.73		0.80	0.00	0.00	325.971	79.88	79.88
3.62		0.81	0.00	0.00	326.301	80.06	80.06
3.34		0.49	0.00	0.00	326.627	79.70	79.70
3.31		0.45	0.00	0.00	326.955	79.70	79.88
3.26		0.40	0.00	0.00	327.287	79.70	79.88
3.06		0.43	0.00	0.00	327.619	79.52	79.70
2.86		0.43	0.00	0.00	327.940	79.16	79.34
2.71		0.45	0.00	0.00	328.258	79.16	79.34
2.74		0.42	0.00	0.00	328.571	79.52	79.70
2.49		0.41	0.00	0.00	328.904	79.52	79.52
2.49		0.40	0.00	0.00	329.235	78.98	79.34
2.35		0.37	0.00	0.00	329.566	78.62	79.16
2.28		0.38	0.00	0.00	329.899	78.80	78.98
2.25		0.38	0.00	0.00	330.227	78.80	78.98
2.20		0.37	0.00	0.00	330.557	78.44	78.80
2.19		0.34	0.00	0.00	330.881	78.08	78.62
2.18		0.32	0.00	0.00	331.214	78.26	78.44

002- Appendix B2- Data and Calculation Forms (page 78 of 94)

84.76	322.287	82.89	82.72	81.71	0.072	0.032		
*	*	*	*	*	*	*		
Filter 1 Temp	DGM 2 Reading	DGM 2 Inlet T	DGM 2 Outlet T	Filter 2 Temp	Tunnel Velocity	Draft		Elapsed Time
80.96	299.603	76.82	76.82	78.44	0.050	0.060		0.00
80.96	299.963	77.00	76.82	78.80	0.040	0.060		10.00
81.50	300.326	77.18	77.18	79.34	0.040	0.058		20.00
81.68	300.669	77.72	77.54	79.16	0.043	0.050		30.00
81.68	300.988	78.26	77.72	79.16	0.045	0.050		40.00
81.50	301.316	77.72	77.54	78.44	0.040	0.050		50.00
81.32	301.634	77.90	77.54	78.26	0.064	0.030		60.00
81.32	301.930	78.08	78.08	77.54	0.070	0.050		70.00
80.42	302.247	77.72	77.72	76.28	0.073	0.040		80.00
80.96	302.572	78.26	77.90	75.74	0.070	0.038		90.00
80.78	302.921	78.08	78.08	75.56	0.070	0.035		100.00
80.06	303.265	78.08	77.90	75.02	0.073	0.035		110.00
80.06	303.630	78.26	78.08	74.66	0.070	0.038		120.00
80.42	304.015	78.62	78.26	75.20	0.070	0.033		130.00
79.88	304.358	78.62	78.44	75.56	0.070	0.030		140.00
80.24	304.701	78.80	78.62	75.38	0.070	0.030		150.00
80.60	305.116	78.98	78.62	75.20	0.073	0.028		160.00
80.24	305.513	79.16	78.98	76.10	0.070	0.023		170.00
79.88	305.901	79.52	78.98	76.46	0.070	0.020		180.00
80.06	306.307	79.34	78.98	76.10	0.073	0.020		190.00
79.52	306.786	79.34	79.16	75.92	0.074	0.020		200.00
79.52	307.256	79.52	79.16	76.64	0.075	0.020		210.00
79.52	307.680	79.70	79.16	76.82	0.075	0.020		220.00

002- Appendix B2- Data and Calculation Forms (page 79 of 94)

79.70	308.059	79.70	79.34	77.36	0.075	0.018		230.00
80.06	308.452	79.70	79.52	77.72	0.075	0.020		240.00
80.42	308.812	79.88	79.70	77.90	0.075	0.020		250.00
80.78	309.182	80.06	79.70	78.44	0.075	0.020		260.00
81.14	309.575	80.24	80.06	78.80	0.076	0.020		270.00
81.14	309.971	80.06	79.88	78.80	0.075	0.020		280.00
81.14	310.373	80.06	79.88	78.80	0.075	0.020		290.00
81.32	310.773	80.24	80.24	78.80	0.074	0.020		300.00
81.32	311.162	80.06	80.06	79.16	0.074	0.023		310.00
81.14	311.560	80.06	79.88	78.98	0.073	0.023		320.00
81.32	311.943	80.06	79.88	79.16	0.074	0.023		330.00
81.32	312.346	80.06	80.06	79.34	0.074	0.023		340.00
81.50	312.731	80.06	80.06	79.70	0.075	0.023		350.00
81.50	313.131	79.70	79.88	80.06	0.075	0.028		360.00
81.32	313.516	79.52	79.70	80.06	0.075	0.028		370.00
81.32	313.922	79.70	79.52	80.42	0.075	0.028		380.00
81.50	314.306	79.34	79.52	80.42	0.075	0.028		390.00
81.50	314.698	79.16	79.34	80.24	0.074	0.028		400.00
81.32	315.087	78.98	79.16	80.24	0.075	0.028		410.00
81.14	315.472	79.16	78.98	80.06	0.075	0.028		420.00

002- Appendix B2- Data and Calculation Forms (page 80 of 94)

	Manufacturer:			SBI			
	Model:			MAX Caddy			
	Date:			1/14/10			
	Run:			3			
	Project #:			3198245/20712-0000121			
	Test Duration:			420			
	Total Gas Volume (DGM 1):			12.718			
	Total Gas Volume (DGM 2):			15.245			
	Average Barometric Pressure:			30.14			
	Molecular Weight:			28.78			
	Pitot Correction:			0.9407			
	Calibration Factor (DGM #1):			0.9800			
	Calibration Factor (DGM #2):			0.9740			
			(1) VS:	0.142619			
			(2) VS:	0.118981			Filter
							Face
DGM 1	DGM 1	DGM 1	DGM 2	DGM 2	DGM 2	Tunnel	Velocity
Reading	Inlet T	Outlet T	Reading	Inlet T	Outlet T	Dry Bulb	DGM 1
318.07	76.28	76.64	299.60	76.82	76.82	130.82001	
318.33	76.82	76.64	299.96	77	76.82	230.53999	2.23
318.60	77.18	77.00	300.33	77.18	77.18	183.38	2.27
318.87	77.54	77.54	300.67	77.720001	77.540001	166.64	2.23
319.13	77.90	77.90	300.99	78.260002	77.720001	162.67999	2.19
319.38	77.18	77.18	301.32	77.720001	77.540001	155.48	2.07
319.57	77.36	77.36	301.63	77.900002	77.540001	105.08	1.56
319.80	77.72	77.72	301.93	78.080002	78.080002	107.06	1.94
320.05	77.00	77.18	302.25	77.720001	77.720001	108.68	2.08
320.36	77.72	77.54	302.57	78.260002	77.900002	110.48	2.58
320.62	77.54	77.54	302.92	78.080002	78.080002	108.86	2.21
320.92	77.00	77.18	303.27	78.080002	77.900002	107.6	2.54
321.23	77.36	77.54	303.63	78.260002	78.080002	109.22	2.52
321.51	77.90	77.90	304.02	78.620003	78.260002	106.52	2.34
321.85	78.26	78.08	304.36	78.620003	78.440002	102.2	2.88
322.23	78.62	78.44	304.70	78.800003	78.620003	99.860001	3.14
322.50	78.44	78.44	305.12	78.980003	78.620003	97.519997	2.30
322.83	78.98	78.62	305.51	79.160004	78.980003	94.82	2.73
323.24	79.52	78.98	305.90	79.519997	78.980003	94.279999	3.40
323.60	79.16	78.98	306.31	79.339996	78.980003	92.839996	3.01
323.95	79.16	79.16	306.79	79.339996	79.160004	92.660004	2.92
324.33	79.34	79.16	307.26	79.519997	79.160004	91.940002	3.17
324.66	79.16	79.34	307.68	79.699997	79.160004	91.400002	2.74

002- Appendix B2- Data and Calculation Forms (page 81 of 94)

325.01	79.34	79.16	308.06	79.699997	79.339996	91.760002	2.92
325.32	79.52	79.34	308.45	79.699997	79.519997	93.919998	2.60
325.64	79.52	79.52	308.81	79.879997	79.699997	93.739998	2.68
325.97	79.88	79.88	309.18	80.059998	79.699997	94.099998	2.73
326.30	80.06	80.06	309.58	80.239998	80.059998	93.919998	2.74
326.63	79.70	79.70	309.97	80.059998	79.879997	95.18	2.71
326.96	79.70	79.88	310.37	80.059998	79.879997	95.18	2.73
327.29	79.70	79.88	310.77	80.239998	80.239998	95.540001	2.76
327.62	79.52	79.70	311.16	80.059998	80.059998	100.04	2.76
327.94	79.16	79.34	311.56	80.059998	79.879997	99.68	2.67
328.26	79.16	79.34	311.94	80.059998	79.879997	99.68	2.65
328.57	79.52	79.70	312.35	80.059998	80.059998	99.139999	2.61
328.90	79.52	79.52	312.73	80.059998	80.059998	98.239998	2.77
329.24	78.98	79.34	313.13	79.699997	79.879997	110.48	2.76
329.57	78.62	79.16	313.52	79.519997	79.699997	109.58	2.76
329.90	78.80	78.98	313.92	79.699997	79.519997	108.68	2.78
330.23	78.80	78.98	314.31	79.339996	79.519997	108.32	2.73
330.56	78.44	78.80	314.70	79.160004	79.339996	107.6	2.75
330.88	78.08	78.62	315.09	78.980003	79.160004	107.06	2.70
331.21	78.26	78.44	315.47	79.160004	78.980003	105.98	2.78

002- Appendix B2- Data and Calculation Forms (page 82 of 94)

						(ASTM E2515
		Stack area (ft2):		0.1963		Manufacturer:
	Wood moisture (% wet):			18.12		Model:
	Load Weight (lbs wet):			48.25		Date:
	Burn Rate (Dry kg/hr):			2.560		Run:
	Final Temperature (DGM #1) Degrees Rankin:					538.568
	Final Temperature (DGM #2) Degrees Rankin:					538.955
	Final Tunnel Temperature Degrees Rankin:					570.660
	Final Tunnel Velocity (feet per second):					17.2511142
	Standardized Tunnel Flow (dscfm):					185.51506
			Average	Average		
			Inlet +	Inlet +		
Filter			Outlet	Outlet	Average	Average
Face	Delta-P	Tunnel	Temp.	Temp.	**101.9**	**102.3**
Velocity	(in. H2O)	Velocity	Meter 1	Meter 2	**Proportional Rates**	
DGM 2	Tunnel	Ft/Sec	Deg. R	Deg. R	**PR1**	**PR2**
	0.050	14.694	536.5	536.8		
2.99	0.040	14.209	536.7	536.9	126.10	140.99
3.02	0.040	13.715	537.1	537.2	123.38	137.09
2.85	0.043	14.034	537.5	537.6	115.51	123.09
2.65	0.045	14.311	537.9	538.0	110.30	111.40
2.72	0.040	13.415	537.2	537.6	109.95	120.95
2.64	0.064	16.259	537.4	537.7	63.01	88.80
2.46	0.070	17.033	537.7	538.1	74.78	79.07
2.63	0.073	17.419	537.1	537.7	78.89	83.15
2.70	0.070	17.085	537.6	538.1	99.94	87.08
2.90	0.070	17.060	537.5	538.1	85.29	93.37
2.85	0.073	17.343	537.1	538.0	96.56	90.36
3.03	0.070	17.066	537.5	538.2	97.63	97.65
3.19	0.070	17.025	537.9	538.4	90.15	102.65
2.84	0.070	16.960	538.2	538.5	110.55	91.08
2.84	0.070	16.925	538.5	538.7	120.07	90.83
3.44	0.073	17.248	538.4	538.8	86.15	107.35
3.29	0.070	16.849	538.8	539.1	104.16	104.51
3.21	0.070	16.840	539.3	539.3	129.29	102.02
3.36	0.073	17.175	539.1	539.2	111.95	104.44
3.97	0.074	17.290	539.2	539.3	107.75	122.32
3.89	0.075	17.395	539.3	539.3	116.09	119.10
3.51	0.075	17.386	539.3	539.4	100.46	107.36

002- Appendix B2- Data and Calculation Forms (page 83 of 94)

3.14	0.075	17.392	539.3	539.5	106.90	95.96
3.25	0.075	17.426	539.4	539.6	95.42	99.67
2.98	0.075	17.423	539.5	539.8	98.43	91.22
3.06	0.075	17.429	539.9	539.9	100.16	93.76
3.25	0.076	17.518	540.1	540.1	100.16	98.94
3.27	0.075	17.446	539.7	540.0	99.72	100.41
3.32	0.075	17.446	539.8	540.0	100.29	101.93
3.31	0.074	17.334	539.8	540.2	102.23	102.04
3.22	0.074	17.405	539.6	540.1	102.72	99.70
3.29	0.073	17.281	539.3	540.0	100.09	102.70
3.17	0.074	17.399	539.3	540.0	98.48	98.16
3.33	0.074	17.391	539.6	540.1	96.76	103.20
3.18	0.075	17.494	539.5	540.1	102.21	97.86
3.31	0.075	17.684	539.2	539.8	102.84	102.88
3.19	0.075	17.670	538.9	539.6	102.86	99.01
3.36	0.075	17.656	538.9	539.6	103.40	104.33
3.18	0.075	17.651	538.9	539.4	101.81	98.71
3.25	0.074	17.522	538.6	539.3	103.16	101.45
3.22	0.075	17.631	538.4	539.1	100.66	100.02
3.19	0.075	17.614	538.4	539.1	103.36	98.89

002- Appendix B2- Data and Calculation Forms (page 84 of 94)

Formula)			
	SBI		
	3198245/20712-0000121		
	1/14/10		
	3		
#1	#2		Average
dDGM	dDGM		**0.3**
Vol.Std.	Vol.Std.		SQRT
(ft3)	(ft3)	Time	Delta-P
		20	0.2236068
0.259	0.347	30	0.2
0.263	0.350	40	0.2
0.259	0.330	50	0.20736441
0.254	0.307	60	0.21213203
0.240	0.316	50	0.2
0.181	0.306	60	0.25298221
0.225	0.285	70	0.26457513
0.242	0.305	80	0.27018512
0.299	0.313	90	0.26457513
0.256	0.336	100	0.26457513
0.295	0.331	110	0.26925824
0.293	0.351	120	0.26457513
0.271	0.370	130	0.26457513
0.334	0.330	140	0.26457513
0.364	0.330	150	0.26457513
0.267	0.399	160	0.27018512
0.317	0.381	170	0.26457513
0.394	0.373	180	0.26457513
0.349	0.390	190	0.27018512
0.338	0.460	200	0.27202941
0.367	0.451	210	0.27386128
0.318	0.407	220	0.27386128

002- Appendix B2- Data and Calculation Forms (page 85 of 94)

0.338	0.364	230	0.27386128
0.301	0.377	240	0.27386128
0.311	0.345	250	0.27386128
0.317	0.355	260	0.27386128
0.318	0.377	270	0.275318
0.315	0.380	280	0.27386128
0.317	0.386	290	0.27386128
0.320	0.383	300	0.27202941
0.321	0.373	310	0.27202941
0.310	0.382	320	0.27018512
0.307	0.367	330	0.27202941
0.302	0.386	340	0.27202941
0.322	0.369	350	0.27386128
0.320	0.384	360	0.27386128
0.320	0.369	370	0.27386128
0.322	0.390	380	0.27386128
0.317	0.369	390	0.27386128
0.319	0.376	400	0.27202941
0.314	0.374	410	0.27386128
0.322	0.370	420	0.27386128

002- Appendix B2- Data and Calculation Forms (page 86 of 94)

E&E FUEL LOAD DATA SHEET

Manufacturer: SBI
Model: 3198245/20712-0000121
Run #:
Test Date: 14/01/2010

Control#: #REF!
Tech: C. Paré

Test Load Weight:

			Lower	Ideal	Upper
Firebox Volume:	4.5	cu. ft	40.50	45.00	49.50
Load Volume:	0.0000	cu. ft			

Loading Density: 10.722 lbs./ft3

Number of Spaces:
Spacer weight:

Load Density (wet): #DIV/0! lbs./ft3
Dry Wood Density: #DIV/0!

Piece Size: Thick	x Wide	x Length	Weight lbs	Meter Moisture Content Dry Uncorrected %			Ave. MC x Weight	Volume Cubic Inches
			7.11	22.30	17.70	20.70	143.86	0.00
			7.89	20.10	19.40	25.20	170.16	0.00
			10.14	20.00	25.50	21.80	227.47	0.00
			5.56	21.10	25.80	22.80	129.18	0.00
			7.53	21.30	18.10	27.90	168.92	0.00
			10.02	21.20	19.20	28.00	228.46	0.00
								0.00
								0.00
								0.00
								0.00
								0.00
								0.00
								0.00
								0.00
								0.00
								0.00
								0.00
						SUM MCxWT	1068.050333	

Test Load Weight: 48.25 lbs.

Dry Weight: 17.92 kg.

Average Moisture Content: %

Dry: 22.14

22.14
Must be 18-28

Wet: 18.12
must be 15-25

Dry:

Coal Bed Range: 4.9 lbs. to 12.0 lbs. 10% to 25% of test load

TEST CHARGE:
Time loaded:_____ Coal bed weight:_____lbs.

Coal bed weight = % of test load weight

002- Appendix B2- Data and Calculation Forms (page 87 of 94)

Flue Temp. (F)	Room Temp. (F)	Tunnel Temp. (F)	Outlet air Temp. (F)	Appliance Firebox Tempe					
				top	back	right	left	bottom	door
237.2	82.22	130.82	100.94	231.08	203.9	225.68	237.38	372.74	
449.24	83.3	230.54	125.6	466.7	200.12	224.24	232.16	368.24	
365.36	84.02	183.38	117.14	412.16	212.36	219.02	229.64	353.48	
330.26	84.38	166.64	114.26	400.64	211.1	217.22	228.56	334.4	
322.34	83.12	162.68	111.92	372.74	207.5	215.78	225.14	314.42	
312.26	81.5	155.48	111.56	366.98	204.62	214.7	222.08	296.42	
209.84	82.94	105.08	107.6	356.54	201.2	212.72	219.38	280.22	
222.08	81.5	107.06	107.42	350.96	197.78	209.48	214.88	266.72	
229.1	82.76	108.68	108.32	374.0	195.62	210.74	214.7	255.38	
235.94	83.12	110.48	110.3	389.48	196.52	215.78	218.84	246.56	
228.92	82.58	108.86	110.12	386.06	199.94	221.18	223.88	239.18	
221.72	82.22	107.6	109.4	376.16	202.28	224.06	226.94	233.42	
227.84	84.92	109.22	108.86	363.56	203.54	225.32	228.38	228.56	
218.48	83.84	106.52	108.32	358.88	205.34	228.74	231.62	224.78	
200.12	83.48	102.2	106.16	339.8	207.14	228.92	234.14	221.72	
188.78	84.02	99.86	104.54	320.54	205.7	225.86	233.24	219.38	
178.7	83.66	97.52	102.56	289.76	203.72	222.26	230.0	217.22	
161.42	83.66	94.82	100.22	260.96	201.74	217.76	226.94	215.06	
156.56	83.3	94.28	99.32	239.9	199.4	213.26	219.92	213.26	
153.68	82.94	92.84	97.88	229.82	196.16	208.94	213.08	211.64	
155.84	83.3	92.66	97.7	231.98	191.84	207.32	207.32	210.2	
149.0	83.3	91.94	97.7	219.92	190.58	206.78	205.16	209.48	
142.88	82.58	91.4	96.98	205.34	188.96	203.54	203.36	209.3	
143.24	84.02	91.76	96.44	195.8	187.34	200.66	201.38	209.48	
153.86	83.12	93.92	97.16	192.02	186.26	199.22	201.92	209.84	
152.96	84.56	93.74	96.98	188.78	185.9	199.22	205.52	210.92	
152.42	85.28	94.1	96.8	188.06	186.44	198.86	207.68	212.72	
153.32	83.48	93.92	97.34	189.68	187.7	199.4	210.02	215.42	

002- Appendix B2- Data and Calculation Forms (page 88 of 94)

Flue Temp. (F)	Room Temp. (F)	Tunnel Temp. (F)	Outlet air Temp. (F)	Appliance Firebox Tempe					
				top	back	right	left	bottom	door
160.7	82.58	95.18	97.34	188.24	187.7	199.4	211.46	218.3	
160.88	83.66	95.18	97.16	187.16	188.42	198.5	212.18	221.36	
161.6	83.66	95.54	97.52	188.6	188.78	197.6	213.26	224.42	
193.82	83.84	100.04	98.42	189.5	188.78	196.52	214.52	227.66	
190.94	82.94	99.68	98.24	188.06	189.86	196.52	217.22	230.9	
190.22	83.66	99.68	97.88	185.18	190.22	196.7	215.96	235.04	
186.8	84.02	99.14	97.88	182.84	190.22	196.16	214.16	238.82	
183.2	83.12	98.24	97.34	177.8	190.58	196.34	211.82	241.88	
203.18	82.94	110.48	97.52	177.44	190.22	196.52	208.76	244.58	
201.02	81.86	109.58	96.8	176.0	189.5	195.98	205.16	246.2	
197.96	81.5	108.68	96.44	172.58	188.78	194.18	201.56	247.1	
195.8	81.86	108.32	96.26	170.42	186.62	192.56	197.6	247.64	
192.92	81.86	107.6	95.72	168.44	184.82	190.4	193.64	247.82	
191.12	81.5	107.06	95.18	165.2	182.48	188.06	190.58	247.82	
188.96	81.14	105.98	94.82	163.58	180.14	186.44	188.06	247.46	

002- Appendix B2- Data and Calculation Forms (page 89 of 94)

eratures (F)			Outer Surface Temperatures (F)		Return Air	DGM 1	DGM 1	Filter 1	DGM 2
ash door	left side	back	right side	front	Temp. (F)	In	Out	Temp.	In
					77.0	76.28	76.64	80.96	76.82
					77.9	76.82	76.64	80.96	77.0
					79.16	77.18	77.0	81.5	77.18
					78.62	77.54	77.54	81.68	77.72
					79.16	77.9	77.9	81.68	78.26
					79.34	77.18	77.18	81.5	77.72
					78.44	77.36	77.36	81.32	77.9
					79.52	77.72	77.72	81.32	78.08
					78.8	77.0	77.18	80.42	77.72
					79.52	77.72	77.54	80.96	78.26
					79.16	77.54	77.54	80.78	78.08
					80.24	77.0	77.18	80.06	78.08
					78.98	77.36	77.54	80.06	78.26
					79.16	77.9	77.9	80.42	78.62
					79.34	78.26	78.08	79.88	78.62
					79.16	78.62	78.44	80.24	78.8
					79.88	78.44	78.44	80.6	78.98
					79.52	78.98	78.62	80.24	79.16
					79.88	79.52	78.98	79.88	79.52
					78.8	79.16	78.98	80.06	79.34
					80.24	79.16	79.16	79.52	79.34
					81.14	79.34	79.16	79.52	79.52
					82.58	79.16	79.34	79.52	79.7
					81.5	79.34	79.16	79.7	79.7
					81.68	79.52	79.34	80.06	79.7
					82.04	79.52	79.52	80.42	79.88
					81.5	79.88	79.88	80.78	80.06
					82.04	80.06	80.06	81.14	80.24

002- Appendix B2- Data and Calculation Forms (page 90 of 94)

eratures (F)			Outer Surface Temperatures (F)		Return Air	DGM 1	DGM 1	Filter 1	DGM 2
ash door	left side	back	right side	front	Temp. (F)	In	Out	Temp.	In
					81.68	79.7	79.7	81.14	80.06
					81.68	79.7	79.88	81.14	80.06
					82.04	79.7	79.88	81.32	80.24
					81.86	79.52	79.7	81.32	80.06
					82.04	79.16	79.34	81.14	80.06
					81.86	79.16	79.34	81.32	80.06
					82.04	79.52	79.7	81.32	80.06
					82.04	79.52	79.52	81.5	80.06
					81.68	78.98	79.34	81.5	79.7
					81.14	78.62	79.16	81.32	79.52
					81.32	78.8	78.98	81.32	79.7
					81.32	78.8	78.98	81.5	79.34
					80.78	78.44	78.8	81.5	79.16
					80.6	78.08	78.62	81.32	78.98
					80.6	78.26	78.44	81.14	79.16

002- Appendix B2- Data and Calculation Forms (page 91 of 94)

DGM 2 Out	Filter 2 Temp.	Open	Flue Gas Composition (%) CO	CO2	O2	Fuel Weight (lbs)	Oulet Duct pitot (in H2O)	F. BOX AVG
76.82	78.44		0.45	4.45	15.29	48.25	0.050	254.155997
76.82	78.8		0.48	14.48	4.85	43.15	0.049	298.292001
77.18	79.34		0.79	4.93	13.77	40.45	0.040	285.332004
77.54	79.16		0.49	7.16	13.13	38.15	0.050	278.384003
77.72	79.16		0.86	5.31	13.41	35.8	0.048	267.116
77.54	78.44		0.75	5.94	12.75	33.7	0.048	260.960004
77.54	78.26		0.46	6.98	12.87	31.5	0.046	254.012003
78.08	77.54		0.45	8.67	10.7	29.45	0.046	247.963998
77.72	76.28		0.39	9.22	10.32	27.35	0.045	250.088
77.9	75.74		0.53	9.75	9.61	25.05	0.045	253.436002
78.08	75.56		0.35	9.25	10.48	23	0.046	254.047998
77.9	75.02		0.3	8.79	11.29	21.1	0.045	252.572
78.08	74.66		0.37	9.06	10.87	19.2	0.046	249.872
78.26	75.2		0.27	8.67	11.27	17.45	0.045	249.872
78.44	75.56		0.21	7.54	12.82	16.05	0.045	246.343997
78.62	75.38		0.24	7.21	13.15	14.75	0.045	240.944003
78.62	75.2		0.54	6.2	13.7	13.7	0.045	232.592001
78.98	76.1		1.06	4.54	14.42	12.5	0.045	224.491998
78.98	76.46		1	4.44	14.73	11.55	0.045	217.147995
78.98	76.1		0.94	4.88	14.7	10.65	0.045	211.928003
79.16	75.92		0.75	5.43	14.21	9.75	0.045	209.732001
79.16	76.64		1.07	4.01	15.42	9	0.045	206.384
79.16	76.82		1.04	3.75	15.66	8.4	0.045	202.1
79.34	77.36		1.04	3.72	15.73	7.85	0.045	198.932001
79.52	77.72		0.87	3.93	15.99	7.25	0.045	197.851999
79.7	77.9		0.82	3.68	16.34	6.65	0.045	198.067999
79.7	78.44		0.8	3.73	16.36	6.05	0.045	198.751999
80.06	78.8		0.81	3.62	16.31	5.55	0.045	200.443997

002- Appendix B2- Data and Calculation Forms (page 92 of 94)

DGM 2 Out	Filter 2 Temp.	Open	CO	Flue Gas Composition (%) CO2	O2	Fuel Weight (lbs)	Oulet Duct pitot (in H2O)	F. BOX AVG
79.88	78.8		0.49	3.34	16.69	5.05	0.045	201.020001
79.88	78.8		0.45	3.31	16.77	4.65	0.045	201.523999
80.24	78.8		0.4	3.26	16.79	4.25	0.045	202.532001
80.06	79.16		0.43	3.06	16.91	3.85	0.045	203.396002
79.88	78.98		0.43	2.86	17.18	3.4	0.045	204.512
79.88	79.16		0.45	2.71	17.33	3	0.045	204.619998
80.06	79.34		0.42	2.74	17.35	2.6	0.046	204.440002
80.06	79.7		0.41	2.49	17.69	2.3	0.045	203.684003
79.88	80.06		0.4	2.49	17.69	1.95	0.045	203.504001
79.7	80.06		0.37	2.35	17.84	1.6	0.045	202.567999
79.52	80.42		0.38	2.28	17.95	1.3	0.045	200.839999
79.52	80.42		0.38	2.25	18	0.95	0.045	198.967999
79.34	80.24		0.37	2.2	18.09	0.6	0.045	197.024002
79.16	80.24		0.34	2.19	18.13	0.3	0.045	194.828
78.98	80.06		0.32	2.18	18.23	0	0.045	193.136002

002- Appendix B2- Data and Calculation Forms (page 93 of 94)

SBI MAX Caddy Summary (Rick)

002- Appendix B2- Data and Calculation Forms (page 94 of 94)

Manufacturer: SBI
Model: MAX Caddy
Date: 1/12/2010 -1/15/2010

Control #: 3198245/20712-0000121

	12-Jan	15-Jan	14-Jan	13-Jan	04-Feb	05-Feb
	High	**Med High**	**Med-Low**	**Low**	**Med-Low**	**Med-Low**
	1	**4**	**3**	**2**	**5**	**6**
Overall Efficiency	73.2%	74.2%	74.6%	79.0%	79.1%	79.5%
Combustion Efficiency	96.9%	96.4%	93.1%	93.8%	95.4%	95.8%
Heat Transfer Efficiency	75.5%	77.0%	80.1%	84.2%	83.0%	83.0%
Delivered Efficiency	56.3%	58.2%	50.5%	64.8%	60.5%	65.6%
Output Rate (kJ/h)	70,241	50,437	37,972	19,438	36,752	33,687
Delivered Output (kJ)	197,948	210,816	179,745	297,432	205,722	226,728
Burn Rate (kg/h)	4.83	3.42	2.56	1.24	2.34	2.13
Input (kJ/h)	95,993	67,985	50,925	24,610	46,444	42,356
% Max	100%	72%	54%	28%	52%	48%
Test Load Weight (dry kg)	17.70	18.23	17.93	23.10	17.12	17.39
MC wet (%)	17.6	17.3	18.12	17.75	17.26	17.84
MC dry (%)	21.36	20.92	22.13	21.58	20.86	21.72
Particulate (g)	18.6	32.29	126.34	120.03	35.32	39.92
CO (g)	845	1,008	1,822	2,141	1,189	1,104
Test Duration (h)	3.67	5.33	7.00	18.67	7.33	8.17
Emissions	**Particulate**					
g/MJ Total Output	0.07	0.12	0.48	0.33	0.13	0.15
g/kg Dry Fuel	1.05	1.77	7.05	5.20	2.09	2.30
g/h	5.07	6.05	18.05	6.43	4.88	4.89
lb/MM Btu Output	0.17	0.28	1.10	0.77	0.31	0.34
g/MJ Delivered Output	0.094	0.153	0.703	0.404	0.172	0.176
Air/Fuel Ratio (A/F)	17.85	20.13	21.60	23.95	19.41	20.30
Emissions	**CO**					
g/MJ Total Output	3.28	3.75	6.86	5.90	4.41	4.01
g/kg Dry Fuel	47.72	55.27	101.67	92.66	69.41	63.49
g/h	230.33	188.94	260.35	114.67	162.10	135.23
lb/MM Btu Output	7.62	8.71	15.93	13.71	10.25	9.33
g/MJ Delivered Output	4.266	4.780	10.139	7.197	5.780	4.869

	Weighted Averages					K X					
	g/mj	**g/hr**	**OE**	**g/MJ Del**	**Del Eff.**	**K**	**E g/MJ Total**	**E g/h**	**O. Eff**	**E g/MJ Del.**	**Del. Eff.**
High	0.07	5.07	73.2%	0.094	56.3%	0.011	0.00079	0.056	0.80%	0.0010	0.62%
Med-High	0.12	6.05	74.2%	0.153	58.2%	0.028	0.00336	0.170	2.08%	0.0043	1.63%
Med-Low	0.13	4.88	79.1%	0.172	60.5%	0.0515	0.00670	0.251	4.07%	0.0089	3.12%
Med-Low	0.15	4.89	79.5%	0.176	65.6%	0.3829	0.05744	1.872	30.44%	0.0674	25.12%
Low	0.33	6.43	79.0%	0.404	64.8%	0.969	0.32054	6.231	76.54%	0.3910	62.79%
					SUMS	1.4424	0.38883	8.580	113.9%	0.473	93.27%
						Wt'd Ave.	**0.270**	**5.948**	**79.0%**	**0.328**	**64.67%**

Med-Low	0.48	18.05	74.6%	0.703	50.5%	0.395	0.18775	7.129	29.45%	0.2776	19.95%

003- Appendix C- Calibration Documents

Calibration Documents

Appendix C

003- Appendix C- Calibration Documents (page 2 of 51)

INSTRUMENTS AND EQUIPMENTS LIST

Equipment #	Description	Make	Model	Serial #	Last Calibration	Calibration Due	Remark
SBI-004	Thermometer	Omega	HH52	4465440	24-nov-09	nov-10	Temp for Flow
SBI-008	Temperature Scan	IOTech	MultiScan 1200		06-nov-09	nov-10	Temperature
SBI-012	Scale 6100g	Ohaus	EOF110	D019024982	14-juil-08	juil-10	Wood Scale
SBI-014	Unit Scale	Weigh-Tronix	WI-110	29009	14-juil-08	juil-10	Unit Scale
SBI-016	Wood Moisture Tester	Delmhorst	J-2000	17515	08-janv-10	08-janv-11	% RH Wood Tester
SBI-024	Reference Magnehelic 0-0,25" H2O	Dwyer	2000-00	W80111CF89	21-août-09	août-10	Tunnel Flow
SBI-027	Magnehelic 0-0,25" H2O	Dwyer	2000-00	R50410CMV82	08-janv-10	08-janv-11	Output Flow
SBI-065	Velocity Tester	Omega	HH-F10		28-déc-09	28-déc-10	Pitot Factor
SBI-096	Reference Calibrator Temperature	Omega	CL23A	T-256137	11-août-09	août-10	Temp Calibrator
SBI-101	Magnehelic 0-0,25" H2O	Dwyer	2000-00C	R41116CMV28	08-janv-10	08-janv-11	Draft
SBI-102	Analytical Scale	Scientech	SA310	25626	14-juil-08	juil-10	Filters & Probes Scale
SBI-103	Reference DGM	American Meter	DTM200A	07J264834	01-mai-07	mai-12	Post Test Calibration
SBI-105	Reference Magnehelic 0-0.5" H2O	Dwyer	2000-0D C	W46QJM	21-août-09	août-10	Magnehelic Check
SBI-113	Gaz Analyser	Siemens	Ultramat 23	7MB2338-8BA10-5AF2	06-nov-09	06-nov-10	Efficiency
SBI-123	Calibration Weight	Troemner	0,02 à 200 grammes		02-août-07	août-12	Scale Check
SBI-124	Magnehelique 0-0.5" H2O	Dwyer	2000-0D C	W11S AL	08-janv-10	08-janv-11	Static Pressure
SBI-142	Standard Pitot Tube	Dwyer	166-12				Tunnel Flow
SBI-152	Wood Moisture Tester	Delmhorst	J-2000	17518	20-janv-10	20-janv-11	% RH Wood Tester
SBI-153	Moisture Content Standard	Delmhorst	MCS-1	81808	18-août-08	18-août-10	% RH Tester Check
SBI-187	Output Pitot Tube	Home Made			07-janv-10	07-janv-10	Output Pitot

003- Appendix C- Calibration Documents (page 3 of 51)

ULRICH

Ulrich Métrologie inc.
Ulrich Metrology Inc.
9912, Côte-de-Liesse
Montréal (Québec) H8T 1A1

Tél. (514) 631-6653
Fax (514) 631-6122
info@ulrich.ca
www.ulrich.ca

CALIBRATION CERTIFICATE

Certificate no.:	188108	**Calibration date**	August 21, 2009
Identification:	SBI-024	**Certificate issued**	August 31, 2009
Description:	MANOMETER, DWYER MAGNEHELIC	**Interval:**	12 months
Size:	0 TO 0.25 IN WATER	**Due date:**	August 21, 2010
Manufacturer:	DWYER	**Procedure no.:**	See notes below.
Model no.:	MAGNEHELIC	**Environment:**	See notes below.
		Temperature:	See notes below.
		Humidity:	See notes below.
		Metrologist:	DNR

Property of: SBI
1700, RUE LEON HARMEL
QUEBEC, QC G1N 4R9

Approved by: Nuccio Mercuri
Nuccio Mercuri, Lab Manager

This calibration certificate is issued in accordance with the applicable requirements of ISO/IEC 17025 and QM-08. Measurement results provided are traceable to either the National Research Council Canada (NRC), the National Institute of Standards and Technology (NIST), a national laboratory of another country signatory to the CIPM Mutual Recognition Arrangement (MRA), or a calibration laboratory accredited by an accrediting body with which Canada has an equivalence agreement.

CALIBRATION STANDARDS

See notes below.

MEASUREMENT UNCERTAINTY

See notes below.

CALIBRATION DATA

This gauge was subcontracted. See next page for measurement results.

© Copyright of this Calibration Certificate CE-03-03 is owned by Ulrich Metrology Inc. and may not be reproduced other than in full except with the prior approval of Ulrich Metrology Inc.

154436 P

Page 1 of 1

003- Appendix C- Calibration Documents (page 4 of 51)

La Cie J. CHEVRIER INSTRUMENTS INC.

4850, bd Gouin est
Montréal-Nord, Qc
Canada H1G 1A2
www.chevrierinstruments.com

Tél. (514) 328-2550
1 800 522-1226
Fax (514) 327-0604
info@chevrierinstruments.com

Instruments de mesure et de régulation pour les procédés industriels et laboratoire d'étalonnage

Certificat d'étalonnage
Calibration certificate

Description	Manomètre différentiel Magnehelic Dwyer Modèle : 2000-00	*Numéro de série / Serial number*	—
Plage / Range	0/0.25 "CE	*Identification*	SBI-024
Précision / Accuracy	±4% p.é.	*Reçu conforme / Received in specs*	Oui
Client / Customer	Ulrich Metrology 17311	*Quitte conforme / Leaving in specs*	Oui
Bon de travail / Work order #	20938-02	*Réparation (o/n) / Repaired (y/n)*	Non

	État instrument / Condition	Arrivée/In	Sortie/Out
		Bon	Bon

Conditions d'étalonnage à l'ambiante / Ambient conditions at time of calibration	**20 ± 1°C**	**35-55% H.R.**

Remarque(s) / Comments: **Ratio étalon instrument : 1.25 :1**

Appliquée / Applied "CE	Lectures / Readings (ascendantes) (ascending)	Erreur / Error	Appliquée / Applied "CE	Lectures / Readings (descendantes) (descending)	Erreur / Error
0.0000	0.00	0.0000	0.0000	0.00	0.0000
0.0285	0.03	0.0015	0.0250	0.03	0.0050
0.0487	0.05	0.0013	0.0439	0.05	0.0061
0.0792	0.08	0.0008	0.0769	0.08	0.0031
0.1006	0.10	-0.0006	0.0984	0.10	0.0016
0.1337	0.13	-0.0037	0.1304	0.13	-0.0004
0.1551	0.15	-0.0051	0.1516	0.15	-0.0016
0.1833	0.18	-0.0033	0.1814	0.18	-0.0014
0.2026	0.20	-0.0026	0.2003	0.20	-0.0003
0.2349	0.23	-0.0049	0.2349	0.23	-0.0049
0.2577	0.25	-0.0077	0.2577	0.25	-0.0077

L'instrument ci-haut mentionné a été étalonné selon la méthode de comparaison en conformité avec la procédure PR004.
The above instrument was calibrated using the comparison method in conformance with the procedure PR004.

Étalons utilisés traçable au C.N.R.C / N.I.S.T.– Standards used C.N.R.C / N.I.S.T. Traceable
***CHEV029**, manomètre/simulateur différentiel Furness Controls PPC500 n/s 960294, 0.0008/80"CE, 0/20 mA, 0/20 Vcc précision pression: ±0.008"CE de 0 à 8"CE ailleurs : ±(0.1% v.m. +1 chiffre), précision voltage et courant ±(0.05%v.m. + 1chiffre), certifié NIST, Certificat: 081126_960294, étalonné le 26 nov. 2008, date due 26 nov. 2009.*

Certifié par / Certified by **Martin Jean** M.J. Date **2009-août-21** Date due / Due Date **2010-août-21**

Numéro du certificat / Certificate number **20938-02-17311**

C.Q PJB

Révision 090804
Reproduction interdite sans consentement écrit
M:\Laboratoire\Certificats\Save\20938-02-17311.doc
Enregistré par le BNQ selon ISO 9001 :2000
À moins d'exception, le ratio d'incertitude étalon/instrument est d'au moins 4 pour 1. The test uncertainty ratio exceeds four to one unless otherwise indicated
Points non-conforme en ombragé. Out of tolerance readings shaded.

Page 1 de 1

003- Appendix C- Calibration Documents (page 5 of 51)

Date: 2010-01-08
ID: SBI-027
Référence: SBI-024

Appliquée		Lectures
("H2O)		("H2O)
0.025		0.025
0.050		0.048
0.100		0.100
0.150		0.160
0.200		0.218

003- Appendix C- Calibration Documents (page 6 of 51)

La Cie J. CHEVRIER INSTRUMENTS INC.

4850, bd Gouin est
Montréal-Nord, Qc
Canada H1G 1A2
www.chevrierinstruments.com

Tél. (514) 328-2550
1 800 522-1226
Fax (514) 327-0604
info@chevrierinstruments.com

Instruments de mesure et de régulation pour les procédés industriels et laboratoire d'étalonnage

Certificat d'étalonnage
Calibration certificate

Description	Anemomètre Omega HH-F10	Numéro de série / Serial number	—
Plage / Range	0/87.9 Knots (X100 pi/min) 0/44.8 m/s	Identification	SBI-065
Précision / Accuracy	±3% v.m. ou ±1Knot (100 pi/min) ±3% v.m. ou ±1 m/sec	Reçu conforme / Received in specs	Non
Client / Customer	SBI international 3424	Quitte conforme / Leaving in specs	Oui
Bon de travail / Work order #	21487-02 — État instrument / Condition: Arrivée/In: Bon; Sortie/Out: Bon	Réparation (o/n) / Repaired (y/n)	Non
Conditions d'étalonnage à l'ambiante / Ambient conditions at time of calibration	21±2°C	35-55% H.R.	
Remarque(s) / Comments			

Appliquée / Applied pi/min	Lectures avant / Before readings	Erreur / Error	Lectures après / After readings	Erreur / Error
150	90	-60	60	-90
300	270	-30	240	-60
500	480	-20	460	-40
800	790	-10	780	-20
1000	1000	0	990	-10
2000	2030	30	1990	-10
3000	3130	130	3040	40
4000	4260	260	4110	110

Étalons utilisés traçable au C.N.R.C / N.I.S.T.– Standards used C.N.R.C / N.I.S.T. Traceable

Étalonné par la méthode de comparaison en conformité avec les spécifications du manufacturier avec:
CHEV031 *Tuyère à jet d'air Airflow Developments type 83 FSL #VM7154670 et plaques orifices certifiées;.Certificats #55723,55724,55725,55726,55728, 070605-CHEV031. Différentiel des pressions mesuré avec transmetteur Kimo modèle CP303-MOP/SPI-1000, n/s 6030628, id.* ***CHEV121****, précision ±(0.5% v.m + 1Pa).référencé au NIST, certificat no.CHEV121-090908, étalonné le 9 septembre 2009, date due 09 mars 2010.*

Certifié par / Certified by Abdennour Hocini A.H

Date 2009-dec-28

Date due / Due Date 2010-dec-28

Numéro du certificat / Certificate number 21487-02-3424

CQ AH

C.Q. DC

Révision 091228
Reproduction interdite sans consentement écrit
Points non-conforme en ombragé. Out of tolerance readings shaded.

M:\Laboratoire\Certificats\Save\21487-02-3424.doc
Enregistré par le BNQ selon ISO 9001 :2000

AU SERVICE DE L'INDUSTRIE depuis 1975

Page 1 de 1

003- Appendix C- Calibration Documents (page 7 of 51)

ULRICH

Ulrich Métrologie inc.
Ulrich Metrology Inc.
9912, Côte-de-Liesse
Montréal (Québec) H8T 1A1

Tél. (514) 631-6653
Fax (514) 631-6122
info@ulrich.ca
www.ulrich.ca

CALIBRATION CERTIFICATE

Certificate no.:	186339	**Calibration date**	August 11, 2009
Identification:	SBI-096	**Certificate issued**	August 11, 2009
Description:	CALIBRATOR, OMEGA CL23A	**Interval:**	12 months
Size:	TC K/J/T	**Due date:**	August 11, 2010
Manufacturer:	OMEGA	**Procedure no.:**	MET/CAL
Model no.:	CL23A	**Environment:**	CLAS Type 2 Laboratory
Serial no.:	T-256137	**Temperature:**	23 ± 2°C
		Humidity:	35 - 55% RH
		Metrologist:	AMC

Property of: SBI
1700, RUE LEON HARMEL
QUEBEC, QC G1N 4R9

Approved by: Nuccio Mercuri
Nuccio Mercuri, Lab Manager

This calibration certificate is issued in accordance with the applicable requirements of ISO/IEC 17025 and QM-08. Measurement results provided are traceable to either the National Research Council Canada (NRC), the National Institute of Standards and Technology (NIST), a national laboratory of another country signatory to the CIPM Mutual Recognition Arrangement (MRA), or a calibration laboratory accredited by an accrediting body with which Canada has an equivalence agreement.

CALIBRATION STANDARDS

See notes below.

MEASUREMENT UNCERTAINTY

The above listed instrument meets or exceeds all specifications as stated in the reference procedure, unless noted otherwise. For measurement results associated with the conformance to a tolerance, the uncertainty in the measurement system did not exceed 25% (4:1 test uncertainty ratio) of the acceptable tolerance for each characteristic calibrated, unless otherwise noted in the report.

CALIBRATION DATA

See next page for measurement results.

Notes:

9V battery was replaced.

© Copyright of this Calibration Certificate CE-03-03 is owned by Ulrich Metrology Inc. and may not be reproduced other than in full except with the prior approval of Ulrich Metrology Inc.

166727 P

Page 1 of 1

003- Appendix C- Calibration Documents (page 8 of 51)

Ulrich Métrologie inc. • Ulrich Metrology Inc.
9912, Côte-de-Liesse Tél. (514) 631-6653
Lachine, QC H8T 1A1 Fax (514) 631-6122
www.ulrich.ca info@ulrich.ca

CALIBRATION DATA

Certificate No.186339

Instrument ID: SBI-096
Type: CALIBRATOR THERMOMETER
Serial no.: T-256137
Procedure: Omega CL23A: 5520A-M

Result: PASS
Condition: FOUND-LEFT

CALIBRATION STANDARDS

Standard ID	Type	Manufacturer	Model no.	Cal. Date	Due Date
8300003	CALIBRATOR	FLUKE	5520A	2009/06/03	2010/06/03

MEASUREMENT RESULTS (Per MET/CAL)

PARAMETER	TRUE VALUE	TEST RESULT	ACCEPTANCE LIMITS LOW	HIGH	PASS/ FAIL	TUR
DISPLAY CALIBRATION						
Did all segments of the display illuminate?						
Result of Operator Evaluation					PASS	
THERMOMETER CALIBRATION						
K Type Thermocouple						
-200.0degF		-200.6	-201.0	-199.0	PASS	1.7
-60.0degF		-60.3	-61.0	-59.0	PASS	3.1
-40.0degF		-40.3	-40.5	-39.5	PASS	1.5
32.0degF		31.6	31.5	32.5	PASS	1.7
1240.0degF		1239.5	1239.5	1240.5	PASS	1.1
1260.0degF		1259.6	1259.5	1260.5	PASS	1.1
2500.0degF		2499.0	2499.0	2501.0	PASS	1.4
J Type Thermocouple						
-200.0degF		-200.6	-201.0	-199.0	PASS	2.1
-60.0degF		-60.2	-61.0	-59.0	PASS	3.5
-40.0degF		-40.2	-40.5	-39.5	PASS	1.7
32.0degF		31.8	31.5	32.5	PASS	2.0
1240.0degF		1239.6	1239.5	1240.5	PASS	1.6
1260.0degF		1259.6	1259.5	1260.5	PASS	1.6
1400.0degF		1399.8	1399.4	1400.6	PASS	1.8
T Type Thermocouple						
-200.0degF		-199.7	-201.0	-199.0	PASS	2.3
-60.0degF		-59.6	-61.0	-59.0	PASS	2.3
-40.0degF		-39.8	-40.5	-39.5	PASS	1.2
32.0degF		32.0	31.5	32.5	PASS	1.7
750.0degF		749.9	749.5	750.5	PASS	2.0
CALIBRATOR CALIBRATION						
K Type Thermocouple						
-200.0degF		-199.8	-201.0	-199.0	PASS	1.7
-60.0degF		-59.9	-61.0	-59.0	PASS	3.1

003- Appendix C- Calibration Documents (page 9 of 51)

Ulrich Métrologie inc. • Ulrich Metrology Inc.
9912, Côte-de-Liesse Tél. (514) 631-6653
Lachine, QC H8T 1A1 Fax (514) 631-6122
www.ulrich.ca info@ulrich.ca

PARAMETER	TRUE VALUE	TEST RESULT	ACCEPTANCE LIMITS LOW	HIGH	PASS/ FAIL	TUR
-40.0degF		-39.9	-40.5	-39.5	PASS	1.5
32.0degF		32.0	31.5	32.5	PASS	1.7
1240.0degF		1239.7	1239.5	1240.5	PASS	1.1
1260.0degF		1259.6	1259.5	1260.5	PASS	1.1
2500.0degF		2499.5	2499.0	2501.0	PASS	1.4
J Type Thermocouple						
-200.0degF		-199.2	-201.0	-199.0	PASS	2.1
-60.0degF		-59.8	-61.0	-59.0	PASS	3.5
-40.0degF		-39.7	-40.5	-39.5	PASS	1.7
32.0degF		32.0	31.5	32.5	PASS	2.0
1240.0degF		1239.8	1239.5	1240.5	PASS	1.6
1260.0degF		1259.7	1259.5	1260.5	PASS	1.6
1400.0degF		1399.4	1399.4	1400.6	PASS	1.8
T Type Thermocouple						
-200.0degF		-199.9	-201.0	-199.0	PASS	2.3
-60.0degF		-60.1	-61.0	-59.0	PASS	2.3
-40.0degF		-40.0	-40.5	-39.5	PASS	1.2
32.0degF		31.9	31.5	32.5	PASS	1.7
750.0degF		749.7	749.5	750.5	PASS	2.0

End of Test Data

Calibration Data for Certificate No. 186339 RtrsIt01 Page 2 of 2

003- Appendix C- Calibration Documents (page 10 of 51)

Date: 2010-01-08
ID: SBI-101
Référence: SBI-024

Appliquée		Lectures
("H2O)		("H2O)
0.025		0.023
0.050		0.050
0.100		0.100
0.150		0.155
0.200		0.203

003- Appendix C- Calibration Documents (page 11 of 51)

METTLER TOLEDO

RAPPORT D'ESSAI EXHAUSTIF

Nom du client	SBI inc.		N° DU TICKET SAV/ORDRE D'INTERVENTION		
Emplacement unité	Laboratoire		N° du client	~~SBI041~~ SBI-102	
Marque/N° de modèle	~~AND FX 40~~ Scientech SA310		N° de série	~~5701927~~ 25626	
Capacité	41g kg ☐ lb	Nb.Divisions	410000	Taille divisions	.0001g

L'équipement de pesage mentionné sur le présent rapport a été vérifié et/ou calibré en conformité avec la procédure Mettler Toledo Réf. VP0023IR, et la norme canadienne et/ou le manuel NIST N°., le cas échéant

VÉRIFICATIONS DES COINS **Poids Appliqué:** 100g **Erreur permissive**

Tel que trouvé	
2: 100.007	3: 100.007
1: 100.006	4: 100.005

J

Tel que remis	
2: —	3: —
1: —	4: —

J

Dans la tolérance sans réglage ☒

Dans la tolérance après réglage ☐

Hors tolérance ☐

Essai progressif	Poids Appliqué	Lecture tel que trouvé	Erreur: plus ou moins (d)	Erreur permissive (d)	Lecture tel que remis	Dans la ToléranceO/N
Zéro	0	0	0	0	0	O ☒ N ☐
	1	0.999	1	1	1.000	O ☒ N ☐
	10	9.998	2	1	10.000	O ☒ N ☐
	100	100.006	6	2	99.998	O ☒ N ☐
Charge Maximale*	200	200.041	41	3	200.000	O ☒ N ☐
	300	—		4	300.000	O ☒ N ☐
						O ☐ N ☐
						O ☐ N ☐
Zéro	0					O ☐ N ☐

*Charge maximale utilisé pour l'essai

Dans la tolérance sans réglage ☐

OBSERVATIONS:

NUMÉROS D'IDENTIFICATION DES POIDS: 40083-BE1-525-560

N° du certificat de traçabilité du poids:	2013-2221-1311205	DATE D'ÉTALONNAGE POUR CLIENT: 14 juillet 08	PROCHAIN ÉTALONNAGE POUR CLIENT: juillet 09

RÉALISER PAR:	Dany Carreau	
	Nom du technicien (en lettres capitales)	Signature du technicien
Le cas échéant:	*Nom du client (en lettres capitales)*	*Signature du client*

VF0005IR.r02, 04/05/01

003- Appendix C- Calibration Documents (page 12 of 51)

METTLER TOLEDO

RAPPORT D'ESSAI EXHAUSTIF

Nom du client	SBI inc.		N° DU TICKET SAV/ORDRE D'INTERVENTION		
Emplacement unité	Laboratoire		N° du client	SBI012	
Marque/N° de modèle	Ohaus Explorer		N° de série	D019024982	
Capacité	6100g kg ☐ lb	Nb.Divisions	61000	Taille divisions	0.1 g

L'équipement de pesage mentionné sur le présent rapport a été vérifié et/ou calibré en conformité avec la procédure Mettler Toledo Réf. VP0023IR, et la norme canadienne et/ou le manuel NIST N°., le cas échéant

VÉRIFICATIONS DES COINS **Poids Appliqué:** 2000g **Erreur permissive** 2grads

Tel que trouvé	
2: 1999.9	3: 1999.9
1: 1999.9	4: 1999.9
J	

Tel que remis	
2: —	3: —
1: —	4: —
J	

Dans la tolérance sans réglage ☒

Dans la tolérance apres réglage ☐

Hors tolérance ☐

Essai progressif	Poids Appliqué	Lecture tel que trouvé	Erreur: plus ou moins (d)	Erreur permissive (d)	Lecture tel que remis	Dans la ToléranceO/N
Zéro	100	100.0	0	0		O ☒ N ☐
	500	500.0	0	1		O ☒ N ☐
	1000	1000.0	0	1		O ☒ N ☐
	2000	1999.9	1	2		O ☒ N ☐
Charge Maximale*	4000	3999.9	1	3		O ☒ N ☐
	6000	5999.9	1	4		O ☒ N ☐
						O ☐ N ☐
						O ☐ N ☐
Zéro						O ☐ N ☐

*Charge maximale utilisé pour l'essai

Dans la tolérance sans réglage ☒

OBSERVATIONS:

NUMÉROS D'IDENTIFICATION DES POIDS:	40083-BE1-525-560		
N° du certificat de traçabilité du poids:	2013-2221-1311205	DATE D'ÉTALONNAGE POUR CLIENT: 14 juillet 09	PROCHAIN ÉTALLONNAGE POUR CLIENT: juillet 09
RÉALISER PAR:	Dany Cayan		
	Nom du technicien (en lettres capitales)		Signature du technicien
Le cas échéant:	*Nom du client (en lettres capitales)*		*Signature du client*

VF0005IR.r02, 04/05/01

003- Appendix C- Calibration Documents (page 13 of 51)

METTLER TOLEDO

RAPPORT D'ESSAI EXHAUSTIF

Nom du client	SBI inc.		N° DU TICKET SAV/ORDRE D'INTERVENTION		
Emplacement unité	Laboratoire		N° du client	SBI014	
Marque/N° de modèle	Weightronix WI-110		N° de série	29009	
Capacité	500lb kg ☐ lb x	Nb.Divisions	10000	Taille divisions	.05lb

L'équipement de pesage mentionné sur le présent rapport a été vérifié et/ou calibré en conformité avec la procédure Mettler Toledo Réf. VP0023IR, et la norme canadienne et/ou le manuel NIST N°., le cas échéant

VÉRIFICATIONS DES COINS **Poids Appliqué:** 100 lb **Erreur permissive** .100 lb

Tel que trouvé	
2: 100.05	3: 99.95
1: 100.00	4: 99.95
J	

Tel que remis	
2: —	3:
1: —	4:
J	

Dans la tolérance sans réglage ☒

Dans la tolérance après réglage ☐

Hors tolérance ☐

Essai progressif	Poids Appliqué	Lecture tel que trouvé	Erreur: plus ou moins (d)	Erreur permissive (d)	Lecture tel que remis	Dans la Tolérance O/N
Zéro	0	0	0	0		O ☒ N ☐
	100	100.00	0	2		O ☒ N ☐
	200	200.05	1	3		O ☒ N ☐
	300	300.05	1	5		O ☒ N ☐
Charge Maximale*	400	400.05	1	5		O ☒ N ☐
						O ☐ N ☐
						O ☐ N ☐
						O ☐ N ☐
Zéro						O ☐ N ☐

*Charge maximale utilisé pour l'essai

Dans la tolérance sans réglage ☐

OBSERVATIONS:

NUMÉROS D'IDENTIFICATION DES POIDS: 40083-BE1-525-560

N° du certificat de traçabilité du poids: 2013-2221-1311205

DATE D'ÉTALONNAGE POUR CLIENT: 14 juillet 08

PROCHAIN ÉTALONNAGE POUR CLIENT: juillet 09

RÉALISER PAR: Dany Carean — Nom du technicien (en lettres capitales) — Signature du technicien

Le cas échéant: *Nom du client (en lettres capitales)* *Signature du client*

VF0005IR.r02, 04/05/01

003- Appendix C- Calibration Documents (page 14 of 51)

METTLER TOLEDO

RAPPORT D'ESSAI EXHAUSTIF

Nom du client	SBI inc.		N° DU TICKET SAV/ORDRE D'INTERVENTION		
Emplacement unité	Laboratoire		N° du client	SBI013	
Marque/N° de modèle	Rice Like IQ-390-DC		N° de série	SBI013	
Capacité	1000 kg ☐ lb x	Nb.Divisions	10000	Taille divisions	.1lb

L'équipement de pesage mentionné sur le présent rapport a été vérifié et/ou calibré en conformité avec la procédure Mettler Toledo Réf. VP0023IR, et la norme canadienne et/ou le manuel NIST N°., le cas échéant

VÉRIFICATIONS DES COINS **Poids Appliqué:** 200 lb **Erreur permissive** .20 lb

Tel que trouvé	
2 200.0	3 200.0
1 200.0	4 199.9
J	

Tel que remis	
2 200.0	3 200.0
1 200.0	4 200.0
J	

Dans la tolérance sans réglage ☒

Dans la tolérance après réglage ☒

Hors tolérance ☐

Essai progressif	Poids Appliqué	Lecture tel que trouvé	Erreur: plus ou moins (d)	Erreur permissive (d)	Lecture tel que remis	Dans la ToléranceO/N
Zéro	0	0		0		O ☒ N ☐
	100	100.0		2		O ☒ N ☐
	200	200.0		2		O ☒ N ☐
	300	300.0		3		O ☒ N ☐
Charge Maximale*	400	400.0		3		O ☒ N ☐
						O ☒ N ☐
						O ☐ N ☐
						O ☐ N ☐
Zéro						O ☐ N ☐

*Charge maximale utilisé pour l'essai

Dans la tolérance sans réglage ☐

OBSERVATIONS:

NUMÉROS D'IDENTIFICATION DES POIDS:	40083-BE1-525-560		
N° du certificat de traçabilité du poids:	2013-2221-1311205	DATE D'ÉTALONNAGE POUR CLIENT: 14 juillet 08	PROCHAIN ÉTALONNAGE POUR CLIENT: juillet 09
RÉALISER PAR:	Dany Carean		
	Nom du technicien (en lettres capitales)		Signature du technicien
Le cas échéant:	*Nom du client (en lettres capitales)*		*Signature du client*

VF0005IR.r02, 04/05/01

003- Appendix C- Calibration Documents (page 15 of 51)

METTLER TOLEDO

RAPPORT D'ESSAI EXHAUSTIF

Nom du client	SBI inc.		N° DU TICKET SAV/ORDRE D'INTERVENTION		
Emplacement unité	Magasin		N° du client		
Marque/N° de modèle	BBA442		N° de série	2910997	
Capacité	35 kg ☑ lb	Nb.Divisions	17 500	Taille divisions	2g

L'équipement de pesage mentionné sur le présent rapport a été vérifié et/ou calibré en conformité avec la procédure Mettler Toledo Réf. VP0023IR, et la norme canadienne et/ou le manuel NIST N°., le cas échéant

VÉRIFICATIONS DES COINS **Poids Appliqué:** 10 kg **Erreur permissive** 5

Tel que trouvé	
2: 9.998	3: 9.996
1: 9.998	4: 9.996
J	

Tel que remis	
2: —	3: —
1: —	4: —
J	

Dans la tolérance sans réglage ☒

Dans la tolérance après réglage ☐

Hors tolérance ☐

Essai progressif	Poids Appliqué	Lecture tel que trouvé	Erreur: plus ou moins (d)	Erreur permissive (d)	Lecture tel que remis	Dans la ToléranceO/N
Zéro	0	0	0	0	0	O ☒ N ☐
	1	1.000	0	2	1.000	O ☒ N ☐
	5	4.998	2	5	5.000	O ☒ N ☐
	10	9.996	4	5	10.000	O ☒ N ☐
Charge Maximale*	20	19.992	8	5	20.000	O ☒ N ☐
	30	—	—	5	30.000	O ☒ N ☐
						O ☐ N ☐
						O ☐ N ☐
Zéro	0					O ☐ N ☐

*Charge maximale utilisé pour l'essai

Dans la tolérance sans réglage ☒

OBSERVATIONS:

NUMÉROS D'IDENTIFICATION DES POIDS:	40083-BE1-525-560		
N° du certificat de traçabilité du poids:	2013-2221-1311205	DATE D'ÉTALONNAGE POUR CLIENT: 14 juillet 08	PROCHAIN ÉTALONNAGE POUR CLIENT: juillet 09
RÉALISER PAR:	Dany Cazeau		
	Nom du technicien (en lettres capitales)		Signature du technicien
Le cas échéant:	*Nom du client (en lettres capitales)*		*Signature du client*

VF0005IR.r02, 04/05/01

003- Appendix C- Calibration Documents (page 16 of 51)

METTLER TOLEDO

RAPPORT D'ESSAI EXHAUSTIF

Nom du client	SBI inc.		N° DU TICKET SAV/ORDRE D'INTERVENTION		
Emplacement unité			N° du client	#6	
Marque/N° de modèle	BBA442		N° de série	2925028	
Capacité	35 kg ☒ lb	Nb.Divisions	17 500	Taille divisions	2g

L'équipement de pesage mentionné sur le présent rapport a été vérifié et/ou calibré en conformité avec la procédure Mettler Toledo Réf. VP0023IR, et la norme canadienne et/ou le manuel NIST N°., le cas échéant

VÉRIFICATIONS DES COINS **Poids Appliqué:** 10 kg **Erreur permissive** 5 grad

Tel que trouvé	
2: 9.996	3: 9.998
1: 9.996	4: 9.998
J	

Tel que remis	
2: —	3: —
1: —	4: —
J	

Dans la tolérance sans réglage ☒

Dans la tolérance après réglage ☐

Hors tolérance ☐

Essai progressif	Poids Appliqué	Lecture tel que trouvé	Erreur: plus ou moins (d)	Erreur permissive (d)	Lecture tel que remis	Dans la ToléranceO/N
Zéro	0	0	0	0	0	O ☒ N ☐
	5	4.998	1	2	5.000	O ☒ N ☐
	10	9.996	2	5	10.000	O ☒ N ☐
	20	19.992	4	5	20.000	O ☒ N ☐
Charge Maximale*	30	29.988	6	5	29.998	O ☒ N ☐
	20	19.992	4	5	20.000	O ☒ N ☐
	10	9.996	2	5	10.000	O ☒ N ☐
	5	4.998	1	2	5.000	O ☒ N ☐
Zéro	0	0	0	0	0	O ☒ N ☐

*Charge maximale utilisé pour l'essai

Dans la tolérance sans réglage ☐

OBSERVATIONS:

NUMÉROS D'IDENTIFICATION DES POIDS:	40083-BE1-525-560		
N° du certificat de traçabilité du poids:	2013-2221-1311205	DATE D'ÉTALONNAGE POUR CLIENT: 14 juillet 08	PROCHAIN ÉTALONNAGE POUR CLIENT: juillet 09
RÉALISER PAR:	Dany Caron	Dany Caron	
	Nom du technicien (en lettres capitales)	Signature du technicien	
Le cas échéant:	*Nom du client (en lettres capitales)*	*Signature du client*	

VF0005IR.r02, 04/05/01

003- Appendix C- Calibration Documents (page 17 of 51)

METTLER TOLEDO

RAPPORT D'ESSAI EXHAUSTIF

Nom du client	SBI inc.		N° DU TICKET SAV/ORDRE D'INTERVENTION		
Emplacement unité	Magasin		N° du client		
Marque/N° de modèle	Pelouze 4010		N° de série	123662	
Capacité	150 kg ☐ lb x	Nb.Divisions	750	Taille divisions	.2lb

L'équipement de pesage mentionné sur le présent rapport a été vérifié et/ou calibré en conformité avec la procédure Mettler Toledo Réf. VP0023IR, et la norme canadienne et/ou le manuel NIST N°., le cas échéant

VÉRIFICATIONS DES COINS **Poids Appliqué:** 20 Kg ~~non requis~~ **Erreur permissive**

Tel que trouvé	
2: 20.0	3: 20.0
1: 20.0	4: 20.0
J	

Tel que remis	
2: —	3:
1: —	4:
J	

Dans la tolérance sans réglage ☒

Dans la tolérance après réglage ☐

Hors tolérance ☐

Essai progressif	Poids Appliqué	Lecture tel que trouvé	Erreur: plus ou moins (d)	Erreur permissive (d)	Lecture tel que remis	Dans la ToléranceO/N
Zéro	0	0	0	0		O ☒ N ☐
	20 Kg	20.0	0	1		O ☒ N ☐
	40 Kg	40.0	0	1		O ☒ N ☐
	60 Kg	60.1	1	2		O ☒ N ☐
Charge Maximale*						O ☐ N ☐
						O ☐ N ☐
						O ☐ N ☐
						O ☐ N ☐
Zéro	0					O ☐ N ☐

*Charge maximale utilisé pour l'essai

Dans la tolérance sans réglage ☒

OBSERVATIONS:

NUMÉROS D'IDENTIFICATION DES POIDS:	40083-BE1-525-560		
N° du certificat de traçabilité du poids:	2013-2221-1311205	DATE D'ÉTALONNAGE POUR CLIENT: 14 juillet 08	PROCHAIN ÉTALONNAGE POUR CLIENT: juillet 09
RÉALISER PAR:	Dany Cheran		
	Nom du technicien (en lettres capitales)		Signature du technicien
Le cas échéant:	*Nom du client (en lettres capitales)*		*Signature du client*

VF0005IR.r02, 04/05/01

003- Appendix C- Calibration Documents (page 18 of 51)

METTLER TOLEDO

RAPPORT D'ESSAI EXHAUSTIF

Nom du client	SBI inc.		N° DU TICKET SAV/ORDRE D'INTERVENTION		
Emplacement unité	Expédition		N° du client	#6	
Marque/N° de modèle	BBA		N° de série	2925028	
Capacité	~~5000~~ 3000 kg ☐ lb x	Nb.Divisions	5000	Taille divisions	0.5 lb

L'équipement de pesage mentionné sur le présent rapport a été vérifié et/ou calibré en conformité avec la procédure Mettler Toledo Réf. VP0023IR, et la norme canadienne et/ou le manuel NIST N°., le cas échéant

VÉRIFICATIONS DES COINS **Poids Appliqué:** ~~441lb~~ 200 kg **Erreur permissive** 1d

Tel que trouvé	
2 —	3
1 —	4
J	

Tel que remis	
2 200.0	3 200.0
1 200.0	4 200.0
J	

Dans la tolérance sans réglage ☐

Dans la tolérance après réglage ☑

Hors tolérance ☐

Essai progressif	Poids Appliqué	Lecture tel que trouvé	Erreur: plus ou moins (d)	Erreur permissive (d)	Lecture tel que remis	Dans la ToléranceO/N
Zéro	0	0	0	0		O ☒ N ☐
	100kg=220lb	100.0		1		O ☒ N ☐
	200kg=441lb	200.0		2		O ☒ N ☐
						O ☐ N ☐
Charge Maximale*						O ☐ N ☐
						O ☐ N ☐
341.4	200kg=441lb	541.4		2		O ☒ N ☐
341.4	100kg=220lb	441.4		1		O ☒ N ☐
Zéro	0					O ☐ N ☐

*Charge maximale utilisé pour l'essai

Dans la tolérance sans réglage ☐

OBSERVATIONS:

NUMÉROS D'IDENTIFICATION DES POIDS:	40083-BE1-525-560		
N° du certificat de traçabilité du poids:	2013-2221-1311205	DATE D'ÉTALONNAGE POUR CLIENT: 14 juillet 08	PROCHAIN ETALLONNAGE POUR CLIENT: juillet 09
RÉALISER PAR:	Dany Carrea		Dany Carrea
	Nom du technicien (en lettres capitales)		Signature du technicien
Le cas échéant:	*Nom du client (en lettres capitales)*		*Signature du client*

VF0005IR.r02, 04/05/01

003- Appendix C- Calibration Documents (page 19 of 51)

CERT. NO.: 0428
01-May-2007

elster
Canadian Meter

CALIBRATION CERTIFICATE

FLOWRATE (AIR) CFH	% CAPACITY (AIR)	INCOMING %PROOF	INCOMING %ERROR

FLOWRATE (AIR) CFH	% CAPACITY (AIR)	OUTGOING %PROOF	OUTGOING %ERROR
30	15	99.9	0.1
60	30	99.8	0.2
96	48	99.8	0.2
130	65	100.1	-0.1
166	83	100.2	-0.2
200	100	100.2	-0.2

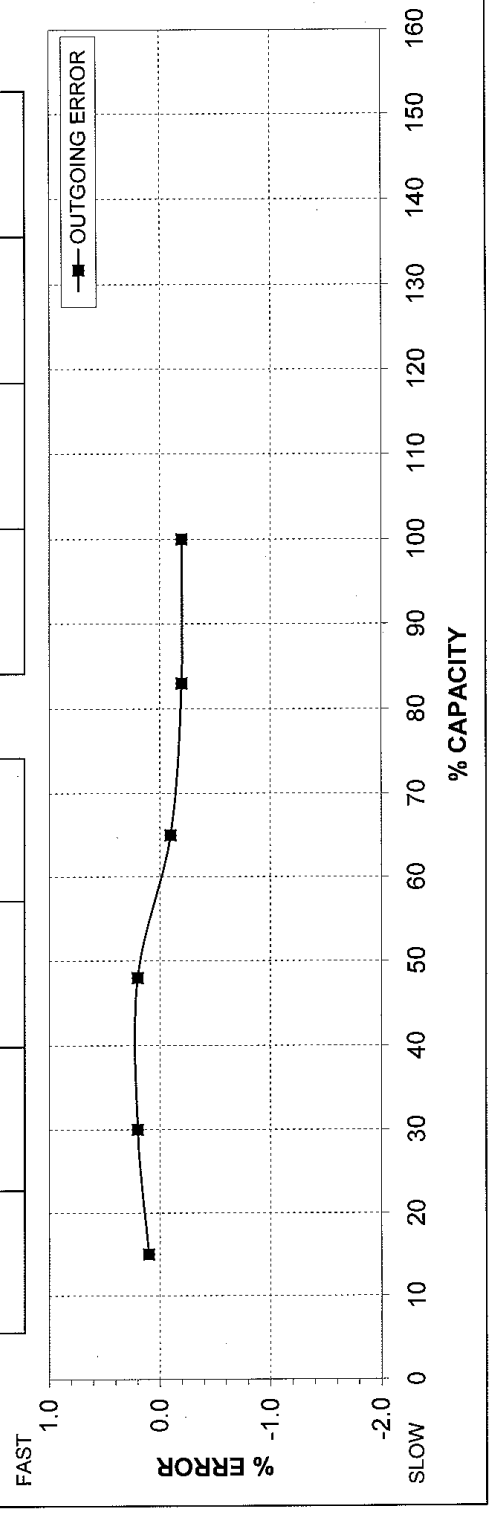

% Proof = (Vp/Vm) x 100; Vm = Meter Volume
% Error =[(Vm-Vp / Vp] x 100; Vp = Prover Volume
% Accuracy = (Vm/Vp) x 100
1 L = 0.001 cu.M. = 0.03531 cu.ft.

Calibrated with air to Elster Canadian Meter flow standards with a process accuracy of ± 0.2%, which are traceable to the National Research Council - Ottawa Canada.
Meter tested on Certified Bell Prover QA-2BM-1

TECH. SERVICES: Kyle Ent Date: May 1, 2007

METER MODEL:	**DTM-200A**
DATE:	01-May-2007
CUSTOMER:	Conval Quebec s/o 10087950
P|N (in. w.c.):	2
M.A.O.P.:	5 PSIG
SERIAL NO.:	07J264834
INDEX READING:	0176 Ft^3

SBI-103

003- Appendix C- Calibration Documents (page 20 of 51)

elster
American Meter

Elster American Meter
2221 Industrial Road
Nebraska City, NE
68410
U.S.A
T +1 402 873 8200
F +1 402 873 7616
www.americanmeter.com

Certificate of Accuracy

Cert-02 Revision E

American Meter Company Quality System
Original September 24th, 1996. Certificate No. 006697
ISO 9001-2000 certified November 6, 2004.
Meters under 500CU-FT/HR ANSI-B109.1 – April 13, 2000
Meters 500CU-FT/HR and over ANSI-B102.2 – April 13, 2000
Residential Regulators ANSI-B109.4 – April 23, 1998 & CGA 6.18-M95

American Meter Company ***certifies that the following named product is accurate to the specifications listed.***

Customer Order Number: **10088109 CMCO # 1055531**

Product Description: **DTM-200A**

Manufacturing Number: **07J264834 thru**

Working Pressure (Psi): **10** **Test Pressure (Psi):** **15**

Accuracy @ **200.0** **CFH** **100.1** **%**

Accuracy @ **65.0** **CFH** **99.9** **%**

Prover Number/s: **XK-1179, XU-3530**

Certified By: Wayne Nelson
Quality Assurance Manager

Date: 4/19/2007

Data obtained on prover certified accurate using PI tape #04190452, NIST #821/263310-00, and digital caliper #0056464, NIST #821/267216-02.

ISO 9001: 2000

QMI REGISTERED

Certificate No. 006697

003- Appendix C- Calibration Documents (page 21 of 51)

AMERICAN METER COMPANY

GAS METER TEST RECORD

Page: 1

Date: 04/24/2007

Sold To Name: CANADIAN METER - Cambridge
Qty Ordered: 1
Sold To Order No: 1055531

SOLD TO ID: P1401
SALES ORDER NO: 10088109
SHOP ORDER NO: 2128149
PROOF TYPE: proof

SERIES ID:	Type:	Drive:	Remote Rdr:	Top:	Index:
200A		0.1FT			

MFG Badge No	SOLD TO BADGE NO	REMOTE READER NO	OPEN	CHECK
07J264834			100.1	99.9

003- Appendix C- Calibration Documents (page 22 of 51)

ULRICH

Ulrich Métrologie inc.
Ulrich Metrology Inc.
9912, Côte-de-Liesse
Montréal (Québec) H8T 1A1

Tél. (514) 631-6653
Fax (514) 631-6122
info@ulrich.ca
www.ulrich.ca

CALIBRATION CERTIFICATE

Certificate no.:	188080	**Calibration date**	August 21, 2009
Identification:	SBI-105	**Certificate issued**	August 31, 2009
Description:	MANOMETER, DWYER MAGNEHELIC	**Interval:**	12 months
Size:	0 TO 0.5 IN WATER	**Due date:**	August 21, 2010
Manufacturer:	DWYER	**Procedure no.:**	See notes below.
Model no.:	MAGNEHELIC	**Environment:**	See notes below.
		Temperature:	See notes below.
		Humidity:	See notes below.
		Metrologist:	DNR

Property of: SBI
1700, RUE LEON HARMEL
QUEBEC, QC G1N 4R9

Approved by: Nuccio Mercuri
Nuccio Mercuri, Lab Manager

This calibration certificate is issued in accordance with the applicable requirements of ISO/IEC 17025 and QM-08. Measurement results provided are traceable to either the National Research Council Canada (NRC), the National Institute of Standards and Technology (NIST), a national laboratory of another country signatory to the CIPM Mutual Recognition Arrangement (MRA), or a calibration laboratory accredited by an accrediting body with which Canada has an equivalence agreement.

CALIBRATION STANDARDS

See notes below.

MEASUREMENT UNCERTAINTY

See notes below.

CALIBRATION DATA

This gauge was subcontracted. See next page for measurement results.

© Copyright of this Calibration Certificate CE-03-03 is owned by Ulrich Metrology Inc. and may not be reproduced other than in full except with the prior approval of Ulrich Metrology Inc.

179543 P

Page 1 of 1

003- Appendix C- Calibration Documents (page 23 of 51)

La Cie J. CHEVRIER INSTRUMENTS INC.

4850, bd Gouin est
Montréal-Nord, Qc
Canada H1G 1A2
www.chevrierinstruments.com

Tél. (514) 328-2550
1 800 522-1226
Fax (514) 327-0604
info@chevrierinstruments.com

Instruments de mesure et de régulation pour les procédés industriels et laboratoire d'étalonnage

Certificat d'étalonnage
Calibration certificate

Description	Manomètre différentiel Magnehelic Dwyer Modèle : 2000-0D			*Numéro de série / Serial number*	—
Plage / Range	0/0.5 "CE			*Identification*	SBI-105
Précision / Accuracy	±3% p.é.			*Reçu conforme / Received in specs*	Oui
Client / Customer	Ulrich Metrology 17311			*Quitte conforme / Leaving in specs*	Oui
Bon de travail / Work order #	20938-01	*État instrument / Condition*	Arrivée/In: Bon; Sortie/Out: Bon	*Réparation (o/n) / Repaired (y/n)*	Non
Conditions d'étalonnage à l'ambiante / Ambient conditions at time of calibration			20 ± 1°C		35-55% H.R.
Remarque(s) / Comments	**Ratio étalon instrument : 1.875 :1**				

Appliquée / Applied "CE	Lectures / Readings (ascendantes) (ascending)	Erreur / Error	Appliquée / Applied "CE	Lectures / Readings (descendantes) (descending)	Erreur / Error
0.0000	0	0.0000	0.0000	0	0.0000
0.0487	0.05	0.0013	0.0427	0.05	0.0073
0.1006	0.10	-0.0006	0.0967	0.10	0.0033
0.1517	0.15	-0.0017	0.1423	0.15	0.0077
0.2074	0.20	-0.0074	0.1938	0.20	0.0062
0.2577	0.25	-0.0077	0.2498	0.25	0.0002
0.3070	0.30	-0.0070	0.2992	0.30	0.0008
0.3522	0.35	-0.0022	0.3491	0.35	0.0009
0.4051	0.40	-0.0051	0.3986	0.40	0.0014
0.4561	0.45	-0.0061	0.4503	0.45	-0.0003
0.5051	0.5	-0.0051	0.5051	0.5	-0.0051

L'instrument ci-haut mentionné a été étalonné selon la méthode de comparaison en conformité avec la procédure PR004
The above instrument was calibrated using the comparison method in conformance with the procedure PR004

Étalons utilisés traçable au C.N.R.C / N.I.S.T.– Standards used C.N.R.C / N.I.S.T. Traceable

***CHEV029**, manomètre/simulateur différentiel Furness Controls PPC500 n/s 960294, 0.0008/80"CE, 0/20 mA, 0/20 Vcc précision pression: ±0.008"CE de 0 à 8"CE ailleurs : ±(0.1% v.m. +1 chiffre), précision voltage et courant ±(0.05%v.m. + 1chiffre), certifié NIST, Certificat: 081126_960294, étalonné le 26 nov. 2008, date due 26 nov. 2009.*

Certifié par / Certified by	**Martin Jean** MJ	Date	**2009-août-21**	Date due / Due Date	**2010-août-21**
		Numéro du certificat / Certificate number	**20938-01-17311**		C.Q PJB

Révision 090722
Reproduction interdite sans consentement écrit
À moins d'exception, le ratio d'incertitude étalon/instrument est d'au moins 4 pour 1. The test uncertainty ratio exceeds four to one unless otherwise indicated
Points non-conforme en ombragé. Out of tolerance readings shaded.

M:\Laboratoire\Certificats\Save\20938-01-17311.doc
Enregistré par le BNQ selon ISO 9001 :2000

Page 1 de 1

003- Appendix C- Calibration Documents (page 24 of 51)

Date: 2010-01-18
ID: SBI-113

Post test calibration

	Calibration gas	Reading
CO	20.10%	20.13%
CO2	19.80%	19.85%
O2	20.90%	20.96%

	Nitrogen	Reading
CO	0.00%	0.00%
CO2	0.00%	0.00%
O2	0.00%	0.00%

003- Appendix C- Calibration Documents (page 25 of 51)

ULRICH

Ulrich Métrologie inc.
Ulrich Metrology Inc.
9912, Côte-de-Liesse
Montréal (Québec) H8T 1A1

Tél. (514) 631-6653
Fax (514) 631-6122
info@ulrich.ca
www.ulrich.ca

CALIBRATION CERTIFICATE

Certificate no.:	90190	**Calibration date:**	August 02, 2007
Instrument ID:	ID-179544	**Certificate issued:**	August 15, 2007
Type:	WEIGHTS, GRAMS, 10 MG TO 200 GRAMS	**Interval:**	12 months
Size:	19 WEIGHTS (10 MG TO 200 G)	**Due date:**	August 2, 2008
Manufacturer:	TROEMNER	**Procedure:**	See notes below.
		Environment:	See notes below.
		Temperature:	See notes below.
		Humidity:	See notes below.
		Metrologist:	AMK
Property of:	SBI 1700, RUE LEON HAMEL QUEBEC, QC G1N 4R9	**Approved by:**	Nuccio Mercuri *Nuccio Mercuri, Lab Manager*

This calibration certificate is issued in accordance with the applicable requirements of ISO/IEC 17025 and QM-07. Measurement results provided are traceable to either the National Research Council Canada (NRC), the National Institute of Standards and Technology (NIST), a national laboratory of another country signatory to the CIPM Mutual Recognitian Arrangement (MRA), or a calibration labaratary accredited by an accrediting body with which Canada has an equivalence agreement.

CALIBRATION STANDARDS

See notes below.

MEASUREMENT UNCERTAINTY

See notes below.

MEASUREMENT RESULTS

This gauge was subcontracted. See next page for measurement results.

Notes:

Some of the weights are out of limit, use with correction or replace.

© Copyright of this Calibration Certificate CE-03-03 is owned by Ulrich Metrology Inc. and may not be reproduced other than in full except with the prior approval of Ulrich Metrology Inc.

Page 1 of 1

003- Appendix C- Calibration Documents (page 26 of 51)

Esterline
CMC Électronique

600, boulevard Dr.-Frederik-Philips, Ville Saint-Laurent (Québec) Canada H4M 2S9
Téléphone : (514) 748-3148 Télécopieur : (514) 748-3149 www.cmcelectronics.ca

912-0005-0383-3 05-07

No Certificat/Certificate CX21788

CERTIFICAT D'ÉTALONNAGE - CALIBRATION CERTIFICATE

Client / Customer: ULRICH METROLOGY INC.

Instrument: WEIGHT SET
Type: 10MG to 200GR
Fabricant / Manufacturer: TROEMNER
No de série / Serial No: N/A
No de stock du client / Customer inventory No: 179544
Cycle d'étalonnage / Calibration cycle: 52 WEEKS
Procédé d'étalonnage / Calibration procedure: ASTM E617-97
Date d'échéance / Due date: 31 JULY 2008

La présente atteste que l'on a procédé à l'étalonnage de l'instrument décrit ci-dessus, avec les étalons de la Société, qui sont rattachables aux étalons du Conseil national de recherches du Canada; et (ou) par le National Institute of Standards and Technology des É.-U., ou tout autre laboratoire d'étalonnage national reconnu.

Ce certificat est la propriété exclusive de CMC Électronique Inc. et les données relatives à l'étalonnage ne peuvent pas être reproduites, sauf en totalité, sans avoir obtenu une autorisation écrite au préalable.

This is to certify that the instrument listed above was calibrated against Company Standards which are directly traceable to the National Research Council of Canada and/or the U.S. National Institute of Standards and Technology, or other recognized national standards laboratories.

This certificate is the exclusive property of CMC Electronics Inc. and the associated calibration data may not be reproduced, except in full, without prior written permission.

Système de qualité enregistré ISO 9001: 2000 et AS9100

Registered Quality System ISO 9001: 2000 and AS9100

Notre système de gestion est conforme à ISO-17025.

Our management system complies with ISO-17025.

ÉTAT DE L'INSTRUMENT / CONDITIONS OF INSTRUMENT

À LA RÉCEPTION / RECEIVED

Selon les spéc. IN specs.	Hors des spéc. OUT of specs.	Réparation nécessaire Required repair
☐	X	☐

AU RETOUR / RETURNED

Selon les spéc. IN specs.	Hors des spéc. OUT of specs.	Réparation nécessaire Required repair
X	☐	☐

CONDITIONS DE MESURE / MEASUREMENT CONDITIONS

Température / Temperature: 19.9 °C
Humidité / Humidity: 44 %

ÉTALONS UTILISÉS / TRANSFER STANDARDS *(VOIR FEUILLE SUIVANTE / SEE FOLLOWING SHEET)*

COMMENTAIRES / REMARKS SOME WEIGHTS ARE OUT OF LIMIT,USE WITH CORRECTION OR REPLACE.

2 AUG. 2007
Date

Technicien / Technician

Approuvé par / Approved by

003- Appendix C- Calibration Documents (page 27 of 51)

CMC Electronique Inc.
CMC Electronics Inc.
600, boulevard Dr.-Frederik-Philips,
Ville Saint-Laurent (Quebec) Canada H4M 2S9
Tel: (514) 748-3148 Telecopieur: 748-3149
www.cmcelectronics.ca

Calibration Data Sheet

CMC Certificate# : CX21788

Instrument: Weights

Model: 10 mg to 100g

Serial No.: N/A

Manufacturer: Ohaus

Customer Inv. No.: 179544

Customer: Ulrich Metrolgie Inc.

Procedure: ASTM E617-97

Class: NIST " F"

Applied Mass mg	Actual Mass mg		Tolerance mg
10.00	11.132	**	+/-0.21
20.00	19.946		+/-0.26
20.00	19.745		+/-0.26
50.00	51.635	**	+/-0.35
100.00	101.707	**	+/-0.43
200.00	200.371		+/-0.54
200.00	205.035	**	+/-0.54
200.00	211.573	**	+/-0.54
500.00	502.271	**	+/-0.72

Class: ASTM "6"

Applied Mass gram	Actual Mass gram		Tolerance mg
1.00	1.000597		+/-2
2.00	2.000612		+/-2
2.00	2.002458	**	+/-2
5.00	5.000287		+/-2
10.00	9.998785		+/-2
10.00	10.001883		+/-2
20.00	19.997401		+/-3
50.00	50.016849	**	+/-7
100.00	100.00008		+/-10
200.00	200.00004		+/-20

** Out of limit, use with correction or replace.

Metrologist: Alok Bhattacharya Date : 02 August ' 2007

Approved :----------

003- Appendix C- Calibration Documents (page 28 of 51)

Esterline
CMC Électronique

Esterline / CMC Électronique Inc.
600, boulevard Dr.-Frederik-Philips
Ville Saint-Laurent (Québec), Canada H4M 2S9
Téléphone: (514) 748-3148 Téléc: (514) 748-3014

 # Certificat / Certificate CX21788

Étalons Utilisés - Transfer Standards

Asset#	Mfg	Model	Description	Cal. due date (dd/mm/yy)
000178	METTLER	AT106	MASS COMPARATOR	07/Jun/08
205450	METTLER TOLEDO	AX1004	COMPARATOR BALANCE	18/Aug/07

02 Aug 2007
Date

Technicien / Technician

Approuvé par / Approved by

003- Appendix C- Calibration Documents (page 29 of 51)

Date: 2010-01-08
ID: SBI-124
Référence: SBI-105

Appliquée		Lectures
("H2O)		("H2O)
0.050		0.050
0.100		0.100
0.200		0.205
0.300		0.310
0.400		0.420

003- Appendix C- Calibration Documents (page 30 of 51)

DELMHORST INSTRUMENT CO.

LETTER OF CERTIFICATION

August 18, 2008

I.T.M. Instruments, Inc.
20800 Boul Industriel
STE-ANNE-DE-Bellevue, QC H9X 0A1
CANADA

Gentlemen:

Subject: Moisture Content Standard Model MCS-1 Serial No. 081808.
This is to certify that the primary calibration - electrical resistance - of the Delmhorst Moisture Meters for wood has been tested on equipment whose accuracy is certified by the following equipment:

General Radio Bridge, Model No. 1644-A, S/N 2526
Keithley Multimeter, Model No. 197, S/N 283483

The calibration of these instruments, certified by Industrial Process Measurement, Inc. with Report No. 34197-01 dated December 4, 2007 and Report No. 34197-02 dated November 19, 2007, is traceable to the NIST.

The MCS-1 (Moisture Content Standard) is an external means to check the Delmhorst Moisture Meters for wood at two points – 12 % and 22% on the Douglas Fir, 4 Pin mode. The two points will yield readings of 12.7% and 23.6% if the meters are set on the Douglas Fir, 70°F, 2 Pin mode. The analog meters in their standard form are always set at Douglas Fir 70°F 4 Pin mode. The resistance values at said points, i.e., 120 Megohms and 1.1 Megohms verified with the same equipment as above, are within ±10% of the above values.

The analog Moisture Meters, checked with the "MCS-1" Standard, should read within (±) one division on the dial at the point(s) checked; the digital Moisture Meters should read within ±0.5 M.C. of the indicated values.

Sincerely,

John C. Laurenzi
V.P. Manufacturing

JCL:mes

51 INDIAN LANE EAST, TOWACO, NEW JERSEY 07082
PHONE: 973-334-2557. FAX: 973-334-2657
www.delmhorst.com

003- Appendix C- Calibration Documents (page 31 of 51)

À la sortie:

Section

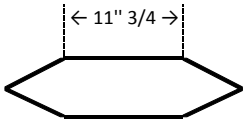

Hauteur totale : 6'' 13/16
Largeur totale : 23'' 1/4
Aire totale: 118,258 po^2
Aire totale: 0,821 pi^2

Vélocité à la sortie fan vitesse 2:

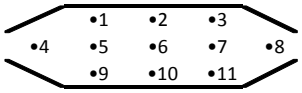

Point de mesure	Vitesse (fpm)
1	1500
2	1530
3	1440
4	1470
5	1600
6	1580
7	1540
8	1420
9	1450
10	1540
11	1500
Moyenne	1506.36

Débit à la sortie: 1506,36 fpm x ,0821 pi^2 = 1236,72 cfm

À la hauteur de la traverse de pitot:

Section du pitot

Hauteur: 7'' 1/2
Largeur: 25'' 9/16
Aire totale: 191,718 po^2
Aire totale: 1,33 pi^2

ΔP pitot: 0.0675'' H_2O
Température : 129,2 °F
Vélocité pitot: 1105,50 fpm
Débit pitot: 1470,31 cfm

Facteur de pitot: 1236,72 cfm/1470,31 cfm = 0.841

003- Appendix C- Calibration Documents (page 32 of 51)

Date: 10-déc-09

Système 1

Pression atmosphérique: 30.13 DGM Référence: 0.99

DGM Référence					DGM en vérification:_____					
DGM avant	DGM après	Différentiel	Température F	Standard	DGM avant	DGM après	Différentiel	Température F	Standard	Facteur
744.500	749.500	5.000	61.4	5.099	21.355	26.327	4.972	62.1	5.063	0.997
751.100	756.700	5.600	65.7	5.664	27.957	33.541	5.584	68.1	5.622	0.997
759.000	764.000	5.000	68.8	5.027	35.877	40.875	4.998	71.1	5.004	0.995
									Moyenne	0.996

Système 2

Pression atmosphérique: 30.13 DGM Référence: 0.99

DGM Référence					DGM en vérification:_____					
DGM avant	DGM après	Différentiel	Température F	Standard	DGM avant	DGM après	Différentiel	Température F	Standard	Facteur
764.700	769.700	5.000	73.3	4.985	935.295	940.294	4.999	74.8	4.970	0.993
751.100	756.700	5.600	65.7	5.664	944.653	949.677	5.024	77.2	4.973	1.128
759.000	764.000	5.000	68.8	5.027	950.928	955.952	5.024	77.8	4.967	1.002
									Moyenne	1.041

003- Appendix C- Calibration Documents (page 33 of 51)

Date : 2009-11-24	Projet : Calibration lecteur température	
Description :		
Calibrateur	Lecteur	
SBI-096	SBI-004	
	Avant	Après
(°F)	(°F)	
32.0	32.2	
77.0	77.0	
150.0	149.8	
300.0	300.6	
500.0	500.0	
750.0	749.6	
1000.0	1000.2	
1250.0	1250.2	
1500.0	1500.2	
1750.0	1750.6	

003- Appendix C- Calibration Documents (page 34 of 51)

Données brutes du Multiscan

DATE: 06-11-09 **Test :** 1.0

Moyennes	846.3	#DIV/0!	846.9	#DIV/0!	#DIV/0!	#DIV/0!	#DIV/0!	#DIV/0!	#DIV/0!	#DIV/0!	
MAXIMUM	2000.0	0.0	2004.1	0.0	0.0	0.0	0.0	0.0	0.0	0.0	
MINIMUM	32.0	0.0	30.4	0.0	0.0	0.0	0.0	0.0	0.0	0.0	
Temps (min)											
1	32.0		30.74								
2	32.0		30.74								
3	32.0		31.1								
4	32.0		30.38								
5	77.0		75.56								
6	77.0		75.56								
7	77.0		75.74								
8	77.0		75.74								
9	150.0		148.82								
10	150.0		148.64								
11	150.0		148.82								
12	150.0		148.82								
13	300.0		299.3								
14	300.0		300.02								
15	300.0		299.3								
16	300.0		299.12								
17	500.0		499.82								
18	500.0		499.64								
19	500.0		499.64								
20	500.0		499.28								
21	750.0		750.02								
22	750.0		750.2								
23	750.0		750.2								
24	750.0		750.38								
25	1000.0		1000.76								
26	1000.0		1000.94								
27	1000.0		1000.76								
28	1000.0		1000.76								
29	1250.0		1252.04								
30	1250.0		1251.68								
31	1250.0		1251.32								
32	1250.0		1251.50								
33	1500.0		1501.88								
34	1500.0		1501.7								
35	1500.0		1501.7								
36	1500.0		1502.42								
37	1750.0		1752.8								
38	1750.0		1752.8								
39	1750.0		1753.16								
40	1750.0		1753.16								
41	2000.0		2003.9								
42	2000.0		2004.08								
43	2000.0		2004.08								
44	2000.0		2004.08								

DROLET POÊLES FOYERS
Fichier: SBI-008_2009-11-06
Onglet: Sheet1

page 1 de 1

imprimé le: 2016-08-30

003- Appendix C- Calibration Documents (page 35 of 51)

METTLER TOLEDO

RAPPORT D'ESSAI EXHAUSTIF

Nom du client	SBI inc.		N° DU TICKET SAV/ORDRE D'INTERVENTION		
Emplacement unité	Laboratoire		N° du client	~~SBI041~~ SBI-102	
Marque/N° de modèle	~~AND FX 40~~ Scientech SA310		N° de série	~~5701927~~ 25626	
Capacité	41g kg ☐ lb	Nb.Divisions	410000	Taille divisions	.0001g

L'équipement de pesage mentionné sur le présent rapport a été vérifié et/ou calibré en conformité avec la procédure Mettler Toledo Réf. VP0023IR, et la norme canadienne et/ou le manuel NIST N°., le cas échéant

VÉRIFICATIONS DES COINS **Poids Appliqué:** 100g **Erreur permissive**

Tel que trouvé	
2: 100.007	3: 100.007
1: 100.006	4: 100.005

J

Tel que remis	
2: —	3: —
1: —	4: —

J

Dans la tolérance sans réglage ☒

Dans la tolérance après réglage ☐

Hors tolérance ☐

Essai progressif	Poids Appliqué	Lecture tel que trouvé	Erreur: plus ou moins (d)	Erreur permissive (d)	Lecture tel que remis	Dans la ToléranceO/N
Zéro	0	0	0	0	0	O ☒ N ☐
	1	0.999	1	1	1.000	O ☒ N ☐
	10	9.998	2	1	10.000	O ☒ N ☐
	100	100.006	6	2	99.998	O ☒ N ☐
Charge Maximale*	200	200.041	41	3	200.000	O ☒ N ☐
	300	—		4	300.000	O ☒ N ☐
						O ☐ N ☐
						O ☐ N ☐
Zéro	0					O ☐ N ☐

*Charge maximale utilisé pour l'essai

Dans la tolérance sans réglage ☐

OBSERVATIONS:

NUMÉROS D'IDENTIFICATION DES POIDS: 40083-BE1-525-560

N° du certificat de traçabilité du poids:	2013-2221-1311205	DATE D'ÉTALONNAGE POUR CLIENT: 14 juillet 08	PROCHAIN ÉTALONNAGE POUR CLIENT: juillet 09

RÉALISER PAR:	Dany Carreau	
	Nom du technicien (en lettres capitales)	Signature du technicien
Le cas échéant:	*Nom du client (en lettres capitales)*	*Signature du client*

VF0005IR.r02, 04/05/01

003- Appendix C- Calibration Documents (page 36 of 51)

METTLER TOLEDO

RAPPORT D'ESSAI EXHAUSTIF

Nom du client	SBI inc.		N° DU TICKET SAV/ORDRE D'INTERVENTION		
Emplacement unité	Laboratoire		N° du client	SBI012	
Marque/N° de modèle	Ohaus Explorer		N° de série	D019024982	
Capacité	6100g kg ☐ lb	Nb.Divisions	61000	Taille divisions	0.1 g

L'équipement de pesage mentionné sur le présent rapport a été vérifié et/ou calibré en conformité avec la procédure Mettler Toledo Réf. VP0023IR, et la norme canadienne et/ou le manuel NIST N°., le cas échéant

VÉRIFICATIONS DES COINS **Poids Appliqué:** 2000g **Erreur permissive** 2grads

Tel que trouvé	
2: 1999.9	3: 1999.9
1: 1999.9	4: 1999.9
J	

Tel que remis	
2: —	3: —
1: —	4: —
J	

Dans la tolérance sans réglage ☒

Dans la tolérance apres réglage ☐

Hors tolérance ☐

Essai progressif	Poids Appliqué	Lecture tel que trouvé	Erreur: plus ou moins (d)	Erreur permissive (d)	Lecture tel que remis	Dans la ToléranceO/N
Zéro	100	100.0	0	0		O ☒ N ☐
	500	500.0	0	1		O ☒ N ☐
	1000	1000.0	0	1		O ☒ N ☐
	2000	1999.9	1	2		O ☒ N ☐
Charge Maximale*	4000	3999.9	1	3		O ☒ N ☐
	6000	5999.9	1	4		O ☒ N ☐
						O ☐ N ☐
						O ☐ N ☐
Zéro						O ☐ N ☐

*Charge maximale utilisé pour l'essai

Dans la tolérance sans réglage ☒

OBSERVATIONS:		
NUMÉROS D'IDENTIFICATION DES POIDS:	40083-BE1-525-560	
N° du certificat de traçabilité du poids: 2013-2221-1311205	DATE D'ÉTALONNAGE POUR CLIENT: 14 juillet 08	PROCHAIN ÉTALONNAGE POUR CLIENT: juillet 09
RÉALISER PAR:	Dany Cayan	
	Nom du technicien (en lettres capitales)	Signature du technicien
Le cas échéant:	*Nom du client (en lettres capitales)*	*Signature du client*

VF0005IR.r02, 04/05/01

003- Appendix C- Calibration Documents (page 37 of 51)

METTLER TOLEDO

RAPPORT D'ESSAI EXHAUSTIF

Nom du client	SBI inc.		N° DU TICKET SAV/ORDRE D'INTERVENTION		
Emplacement unité	Laboratoire		N° du client	SBI014	
Marque/N° de modèle	Weightronix WI-110		N° de série	29009	
Capacité	500lb kg ☐ lb x	Nb.Divisions	10000	Taille divisions	.05lb

L'équipement de pesage mentionné sur le présent rapport a été vérifié et/ou calibré en conformité avec la procédure Mettler Toledo Réf. VP0023IR, et la norme canadienne et/ou le manuel NIST N°., le cas échéant

VÉRIFICATIONS DES COINS **Poids Appliqué:** 100 lb **Erreur permissive** .100 lb

Tel que trouvé	
2: 100.05	3: 99.95
1: 100.00	4: 99.95
J	

Tel que remis	
2: —	3:
1: —	4:
J	

Dans la tolérance sans réglage ☒

Dans la tolérance après réglage ☐

Hors tolérance ☐

Essai progressif	Poids Appliqué	Lecture tel que trouvé	Erreur: plus ou moins (d)	Erreur permissive (d)	Lecture tel que remis	Dans la Tolérance O/N
Zéro	0	0	0	0		O ☒ N ☐
	100	100.00	0	2		O ☒ N ☐
	200	200.05	1	3		O ☒ N ☐
	300	300.05	1	5		O ☒ N ☐
Charge Maximale*	400	400.05	1	5		O ☒ N ☐
						O ☐ N ☐
						O ☐ N ☐
						O ☐ N ☐
Zéro						O ☐ N ☐

*Charge maximale utilisé pour l'essai

Dans la tolérance sans réglage ☐

OBSERVATIONS:

NUMÉROS D'IDENTIFICATION DES POIDS: 40083-BE1-525-560

N° du certificat de traçabilité du poids:	2013-2221-1311205	DATE D'ÉTALONNAGE POUR CLIENT: 14 juillet 08	PROCHAIN ÉTALONNAGE POUR CLIENT: juillet 09

RÉALISER PAR:	Dany Carean	Dany Carean
	Nom du technicien (en lettres capitales)	Signature du technicien
Le cas échéant:	*Nom du client (en lettres capitales)*	*Signature du client*

VF0005IR.r02, 04/05/01

003- Appendix C- Calibration Documents (page 38 of 51)

METTLER TOLEDO

RAPPORT D'ESSAI EXHAUSTIF

Nom du client	SBI inc.		N° DU TICKET SAV/ORDRE D'INTERVENTION		
Emplacement unité	Laboratoire		N° du client	SBI013	
Marque/N° de modèle	Rice Like IQ-390-DC		N° de série	SBI013	
Capacité	1000 kg ☐ lb x	Nb.Divisions	10000	Taille divisions	.1lb

L'équipement de pesage mentionné sur le présent rapport a été vérifié et/ou calibré en conformité avec la procédure Mettler Toledo Réf. VP0023IR, et la norme canadienne et/ou le manuel NIST N°., le cas échéant

VÉRIFICATIONS DES COINS **Poids Appliqué:** 200 lb **Erreur permissive** .20 lb

Tel que trouvé		Tel que remis	
2: 200.0	3: 200.0	2: 200.0	3: 200.0
1: 200.0	4: 199.9	1: 200.0	4: 200.0
J		J	

Dans la tolérance sans réglage ☒

Dans la tolérance après réglage ☒

Hors tolérance ☐

Essai progressif	Poids Appliqué	Lecture tel que trouvé	Erreur: plus ou moins (d)	Erreur permissive (d)	Lecture tel que remis	Dans la ToléranceO/N
Zéro	0	0		0		O ☒ N ☐
	100	100.0		2		O ☒ N ☐
	200	200.0		2		O ☒ N ☐
	300	300.0		3		O ☒ N ☐
Charge Maximale*	400	400.0		3		O ☒ N ☐
						O ☒ N ☐
						O ☐ N ☐
						O ☐ N ☐
Zéro						O ☐ N ☐

*Charge maximale utilisé pour l'essai

Dans la tolérance sans réglage ☐

OBSERVATIONS:

NUMÉROS D'IDENTIFICATION DES POIDS:	40083-BE1-525-560		
N° du certificat de traçabilité du poids:	2013-2221-1311205	DATE D'ÉTALONNAGE POUR CLIENT: 14 juillet 08	PROCHAIN ÉTALONNAGE POUR CLIENT: juillet 09
RÉALISER PAR:	Dany Carean		Dany Carean
	Nom du technicien (en lettres capitales)		Signature du technicien
Le cas échéant:	*Nom du client (en lettres capitales)*		*Signature du client*

VF0005IR.r02, 04/05/01

003- Appendix C- Calibration Documents (page 39 of 51)

METTLER TOLEDO

RAPPORT D'ESSAI EXHAUSTIF

Nom du client	SBI inc.		N° DU TICKET SAV/ORDRE D'INTERVENTION		
Emplacement unité	Magasin		N° du client		
Marque/N° de modèle	BBA442		N° de série	2910997	
Capacité	35 kg ☑ lb	Nb.Divisions	17 500	Taille divisions	2g

L'équipement de pesage mentionné sur le présent rapport a été vérifié et/ou calibré en conformité avec la procédure Mettler Toledo Réf. VP0023IR, et la norme canadienne et/ou le manuel NIST N°., le cas échéant

VÉRIFICATIONS DES COINS **Poids Appliqué:** 10 kg **Erreur permissive** 5

Tel que trouvé	
2: 9.998	3: 9.996
1: 9.998	4: 9.996
J	

Tel que remis	
2: —	3: —
1: —	4: —
J	

Dans la tolérance sans réglage ☒

Dans la tolérance après réglage ☐

Hors tolérance ☐

Essai progressif	Poids Appliqué	Lecture tel que trouvé	Erreur: plus ou moins (d)	Erreur permissive (d)	Lecture tel que remis	Dans la ToléranceO/N
Zéro	0	0	0	0	0	O ☒ N ☐
	1	1.000	0	2	1.000	O ☒ N ☐
	5	4.998	2	5	5.000	O ☒ N ☐
	10	9.996	4	5	10.000	O ☒ N ☐
Charge Maximale*	20	19.992	8	5	20.000	O ☒ N ☐
	30	—	—	5	30.000	O ☒ N ☐
						O ☐ N ☐
						O ☐ N ☐
Zéro	0					O ☐ N ☐

*Charge maximale utilisé pour l'essai

Dans la tolérance sans réglage ☒

OBSERVATIONS:

NUMÉROS D'IDENTIFICATION DES POIDS:	40083-BE1-525-560		
N° du certificat de traçabilité du poids:	2013-2221-1311205	DATE D'ÉTALONNAGE POUR CLIENT: 14 juillet 08	PROCHAIN ÉTALONNAGE POUR CLIENT: juillet 09
RÉALISER PAR:	Dany Cazeau		
	Nom du technicien (en lettres capitales)		Signature du technicien
Le cas échéant:	*Nom du client (en lettres capitales)*		*Signature du client*

VF0005IR.r02, 04/05/01

003- Appendix C- Calibration Documents (page 40 of 51)

METTLER TOLEDO

RAPPORT D'ESSAI EXHAUSTIF

Nom du client	SBI inc.		N° DU TICKET SAV/ORDRE D'INTERVENTION		
Emplacement unité			N° du client	#6	
Marque/N° de modèle	BBA442		N° de série	2925028	
Capacité	35 kg ☒ lb	Nb.Divisions	17 500	Taille divisions	2g

L'équipement de pesage mentionné sur le présent rapport a été vérifié et/ou calibré en conformité avec la procédure Mettler Toledo Réf. VP0023IR, et la norme canadienne et/ou le manuel NIST N°., le cas échéant

VÉRIFICATIONS DES COINS **Poids Appliqué:** 10 kg **Erreur permissive** 5 grad

Tel que trouvé	
2: 9.996	3: 9.998
1: 9.996	4: 9.998
J	

Tel que remis	
2: —	3: —
1: —	4: —
J	

Dans la tolérance sans réglage ☒

Dans la tolérance après réglage ☐

Hors tolérance ☐

Essai progressif	Poids Appliqué	Lecture tel que trouvé	Erreur: plus ou moins (d)	Erreur permissive (d)	Lecture tel que remis	Dans la ToléranceO/N
Zéro	0	0	0	0	0	O ☒ N ☐
	5	4.998	1	2	5.000	O ☒ N ☐
	10	9.996	2	5	10.000	O ☒ N ☐
	20	19.998	4	5	20.000	O ☒ N ☐
Charge Maximale*	30	29.998	6	5	29.998	O ☒ N ☐
	20	19.998	4	5	20.000	O ☒ N ☐
	10	9.996	2	5	10.000	O ☒ N ☐
	5	4.998	1	2	5.000	O ☒ N ☐
Zéro	0	0	0	0	0	O ☒ N ☐

*Charge maximale utilisé pour l'essai

Dans la tolérance sans réglage ☐

OBSERVATIONS:

NUMÉROS D'IDENTIFICATION DES POIDS:	40083-BE1-525-560		
N° du certificat de traçabilité du poids:	2013-2221-1311205	DATE D'ÉTALONNAGE POUR CLIENT: 14 juillet 08	PROCHAIN ÉTALONNAGE POUR CLIENT: juillet 09
RÉALISER PAR:	Dany Caron	Dany Caron	
	Nom du technicien (en lettres capitales)	Signature du technicien	
Le cas échéant:	*Nom du client (en lettres capitales)*	*Signature du client*	

VF0005IR.r02, 04/05/01

003- Appendix C- Calibration Documents (page 41 of 51)

METTLER TOLEDO

RAPPORT D'ESSAI EXHAUSTIF

Nom du client	SBI inc.		N° DU TICKET SAV/ORDRE D'INTERVENTION		
Emplacement unité	Magasin		N° du client		
Marque/N° de modèle	Pelouze 4010		N° de série	123662	
Capacité	150 kg ☐ lb x	Nb.Divisions	750	Taille divisions	.2lb

L'équipement de pesage mentionné sur le présent rapport a été vérifié et/ou calibré en conformité avec la procédure Mettler Toledo Réf. VP0023IR, et la norme canadienne et/ou le manuel NIST N°., le cas échéant

VÉRIFICATIONS DES COINS **Poids Appliqué:** 20 Kg ~~non requis~~ **Erreur permissive**

Tel que trouvé	
2: 20.0	3: 20.0
1: 20.0	4: 20.0
J	

Tel que remis	
2: —	3:
1: —	4:
J	

Dans la tolérance sans réglage ☒

Dans la tolérance après réglage ☐

Hors tolérance ☐

Essai progressif	Poids Appliqué	Lecture tel que trouvé	Erreur: plus ou moins (d)	Erreur permissive (d)	Lecture tel que remis	Dans la ToléranceO/N
Zéro	0	0	0	0		O ☒ N ☐
	20 Kg	20.0	0	1		O ☒ N ☐
	40 Kg	40.0	0	1		O ☒ N ☐
	60 Kg	60.1	1	2		O ☒ N ☐
Charge Maximale*						O ☐ N ☐
						O ☐ N ☐
						O ☐ N ☐
						O ☐ N ☐
Zéro	0					O ☐ N ☐

*Charge maximale utilisé pour l'essai

Dans la tolérance sans réglage ☒

OBSERVATIONS:

NUMÉROS D'IDENTIFICATION DES POIDS:	40083-BE1-525-560		
N° du certificat de traçabilité du poids:	2013-2221-1311205	DATE D'ÉTALONNAGE POUR CLIENT: 14 juillet 08	PROCHAIN ÉTALONNAGE POUR CLIENT: juillet 09
RÉALISER PAR:	Nom du technicien (en lettres capitales)	Signature du technicien	
Le cas échéant:	Nom du client (en lettres capitales)	Signature du client	

VF0005IR.r02, 04/05/01

003- Appendix C- Calibration Documents (page 42 of 51)

METTLER TOLEDO

RAPPORT D'ESSAI EXHAUSTIF

Nom du client	SBI inc.		N° DU TICKET SAV/ORDRE D'INTERVENTION		
Emplacement unité	Expédition		N° du client	#6	
Marque/N° de modèle	BBA		N° de série	2925028	
Capacité	~~5000~~ 3000 kg ☐ lb x	Nb.Divisions	5000	Taille divisions	0.5 lb

L'équipement de pesage mentionné sur le présent rapport a été vérifié et/ou calibré en conformité avec la procédure Mettler Toledo Réf. VP0023IR, et la norme canadienne et/ou le manuel NIST N°., le cas échéant

VÉRIFICATIONS DES COINS **Poids Appliqué:** ~~441lb~~ 200 kg **Erreur permissive** 1d

Tel que trouvé	
2 —	3
1 —	4
J	

Tel que remis	
2 200.0	3 200.0
1 200.0	4 200.0
J	

Dans la tolérance sans réglage ☐

Dans la tolérance après réglage ☑

Hors tolérance ☐

Essai progressif	Poids Appliqué	Lecture tel que trouvé	Erreur: plus ou moins (d)	Erreur permissive (d)	Lecture tel que remis	Dans la ToléranceO/N
Zéro	0	0	0	0		O ☒ N ☐
	100kg=220lb	100.0		1		O ☒ N ☐
	200kg=441lb	200.0		2		O ☒ N ☐
						O ☐ N ☐
Charge Maximale*						O ☐ N ☐
						O ☐ N ☐
341.4	200kg=441lb	541.4		2		O ☒ N ☐
341.4	100kg=220lb	441.4		1		O ☒ N ☐
Zéro	0					O ☐ N ☐

*Charge maximale utilisé pour l'essai

Dans la tolérance sans réglage ☐

OBSERVATIONS:

NUMÉROS D'IDENTIFICATION DES POIDS:	40083-BE1-525-560		
N° du certificat de traçabilité du poids:	2013-2221-1311205	DATE D'ÉTALONNAGE POUR CLIENT: 14 juillet 08	PROCHAIN ETALLONNAGE POUR CLIENT: juillet 09
RÉALISER PAR:	Dany Carrea		Dany Carrea
	Nom du technicien (en lettres capitales)		Signature du technicien
Le cas échéant:	*Nom du client (en lettres capitales)*		*Signature du client*

VF0005IR.r02, 04/05/01

003- Appendix C- Calibration Documents (page 43 of 51)

METTLER TOLEDO

RAPPORT D'ESSAI EXHAUSTIF

Nom du client	SBI inc.		N° DU TICKET SAV/ORDRE D'INTERVENTION		
Emplacement unité	Laboratoire		N° du client	~~SBI041~~ SBI-102	
Marque/N° de modèle	~~AND FX 40~~ Scientech SA310		N° de série	~~5701927~~ 25626	
Capacité	41g kg ☐ lb	Nb.Divisions	410000	Taille divisions	.0001g

L'équipement de pesage mentionné sur le présent rapport a été vérifié et/ou calibré en conformité avec la procédure Mettler Toledo Réf. VP0023IR, et la norme canadienne et/ou le manuel NIST N°., le cas échéant

VÉRIFICATIONS DES COINS **Poids Appliqué:** 100g **Erreur permissive**

Tel que trouvé	
2: 100.007	3: 100.007
1: 100.006	4: 100.005

J

Tel que remis	
2: —	3: —
1: —	4: —

J

Dans la tolérance sans réglage ☒

Dans la tolérance après réglage ☐

Hors tolérance ☐

Essai progressif	Poids Appliqué	Lecture tel que trouvé	Erreur: plus ou moins (d)	Erreur permissive (d)	Lecture tel que remis	Dans la ToléranceO/N
Zéro	0	0	0	0	0	O ☒ N ☐
	1	0.999	1	1	1.000	O ☒ N ☐
	10	9.998	2	1	10.000	O ☒ N ☐
	100	100.006	6	2	99.998	O ☒ N ☐
Charge Maximale*	200	200.041	41	3	200.000	O ☒ N ☐
	300	—		4	300.000	O ☒ N ☐
						O ☐ N ☐
						O ☐ N ☐
Zéro	0					O ☐ N ☐

*Charge maximale utilisé pour l'essai

Dans la tolérance sans réglage ☐

OBSERVATIONS:

NUMÉROS D'IDENTIFICATION DES POIDS: 40083-BE1-525-560

N° du certificat de traçabilité du poids:	2013-2221-1311205	DATE D'ÉTALONNAGE POUR CLIENT: 14 juillet 08	PROCHAIN ÉTALONNAGE POUR CLIENT: juillet 09

RÉALISER PAR:	Dany Carreau	
	Nom du technicien (en lettres capitales)	Signature du technicien
Le cas échéant:	*Nom du client (en lettres capitales)*	*Signature du client*

VF0005IR.r02, 04/05/01

003- Appendix C- Calibration Documents (page 44 of 51)

METTLER TOLEDO

RAPPORT D'ESSAI EXHAUSTIF

Nom du client	SBI inc.		N° DU TICKET SAV/ORDRE D'INTERVENTION		
Emplacement unité	Laboratoire		N° du client	SBI012	
Marque/N° de modèle	Ohaus Explorer		N° de série	D019024982	
Capacité	6100g kg ☐ lb	Nb.Divisions	61000	Taille divisions	0.1 g

L'équipement de pesage mentionné sur le présent rapport a été vérifié et/ou calibré en conformité avec la procédure Mettler Toledo Réf. VP0023IR, et la norme canadienne et/ou le manuel NIST N°., le cas échéant

VÉRIFICATIONS DES COINS **Poids Appliqué:** 2000g **Erreur permissive** 2grads

Tel que trouvé	
2: 1999.9	3: 1999.9
1: 1999.9	4: 1999.9
J	

Tel que remis	
2: —	3: —
1: —	4: —
J	

Dans la tolérance sans réglage ☒

Dans la tolérance apres réglage ☐

Hors tolérance ☐

Essai progressif	Poids Appliqué	Lecture tel que trouvé	Erreur: plus ou moins (d)	Erreur permissive (d)	Lecture tel que remis	Dans la ToléranceO/N
Zéro	100	100.0	0	0		O ☒ N ☐
	500	500.0	0	1		O ☒ N ☐
	1000	1000.0	0	1		O ☒ N ☐
	2000	1999.9	1	2		O ☒ N ☐
Charge Maximale*	4000	3999.9	1	3		O ☒ N ☐
	6000	5999.9	1	4		O ☒ N ☐
						O ☐ N ☐
						O ☐ N ☐
Zéro						O ☐ N ☐

*Charge maximale utilisé pour l'essai

Dans la tolérance sans réglage ☒

OBSERVATIONS:		
NUMÉROS D'IDENTIFICATION DES POIDS:	40083-BE1-525-560	
N° du certificat de traçabilité du poids: 2013-2221-1311205	DATE D'ÉTALONNAGE POUR CLIENT: 14 juillet 09	PROCHAIN ÉTALONNAGE POUR CLIENT: juillet 09
RÉALISER PAR:	Dany Cayan	
	Nom du technicien (en lettres capitales)	Signature du technicien
Le cas échéant:	*Nom du client (en lettres capitales)*	*Signature du client*

VF0005IR.r02, 04/05/01

003- Appendix C- Calibration Documents (page 45 of 51)

METTLER TOLEDO

RAPPORT D'ESSAI EXHAUSTIF

Nom du client	SBI inc.		N° DU TICKET SAV/ORDRE D'INTERVENTION		
Emplacement unité	Laboratoire		N° du client	SBI014	
Marque/N° de modèle	Weightronix WI-110		N° de série	29009	
Capacité	500lb kg ☐ lb x	Nb.Divisions	10000	Taille divisions	.05lb

L'équipement de pesage mentionné sur le présent rapport a été vérifié et/ou calibré en conformité avec la procédure Mettler Toledo Réf. VP0023IR, et la norme canadienne et/ou le manuel NIST N°., le cas échéant

VÉRIFICATIONS DES COINS **Poids Appliqué:** 100 lb **Erreur permissive** .100 lb

Tel que trouvé	
2: 100.05	3: 99.95
1: 100.00	4: 99.95
J	

Tel que remis	
2: —	3:
1: —	4:
J	

Dans la tolérance sans réglage ☒

Dans la tolérance après réglage ☐

Hors tolérance ☐

Essai progressif	Poids Appliqué	Lecture tel que trouvé	Erreur: plus ou moins (d)	Erreur permissive (d)	Lecture tel que remis	Dans la Tolérance O/N
Zéro	0	0	0	0		O ☒ N ☐
	100	100.00	0	2		O ☒ N ☐
	200	200.05	1	3		O ☒ N ☐
	300	300.05	1	5		O ☒ N ☐
Charge Maximale*	400	400.05	1	5		O ☒ N ☐
						O ☐ N ☐
						O ☐ N ☐
						O ☐ N ☐
Zéro						O ☐ N ☐

*Charge maximale utilisé pour l'essai

Dans la tolérance sans réglage ☐

OBSERVATIONS:

NUMÉROS D'IDENTIFICATION DES POIDS: 40083-BE1-525-560

N° du certificat de traçabilité du poids: 2013-2221-1311205 DATE D'ÉTALONNAGE POUR CLIENT: 14 juillet 08 PROCHAIN ÉTALONNAGE POUR CLIENT: juillet 09

RÉALISER PAR:	Dany Carean	
	Nom du technicien (en lettres capitales)	Signature du technicien
Le cas échéant:	*Nom du client (en lettres capitales)*	*Signature du client*

VF0005IR.r02, 04/05/01

003- Appendix C- Calibration Documents (page 46 of 51)

METTLER TOLEDO

RAPPORT D'ESSAI EXHAUSTIF

Nom du client	SBI inc.		N° DU TICKET SAV/ORDRE D'INTERVENTION		
Emplacement unité	Laboratoire		N° du client	SBI013	
Marque/N° de modèle	Rice Like IQ-390-DC		N° de série	SBI013	
Capacité	1000 kg ☐ lb x	Nb.Divisions	10000	Taille divisions	.1lb

L'équipement de pesage mentionné sur le présent rapport a été vérifié et/ou calibré en conformité avec la procédure Mettler Toledo Réf. VP0023IR, et la norme canadienne et/ou le manuel NIST N°., le cas échéant

VÉRIFICATIONS DES COINS **Poids Appliqué:** 200 lb **Erreur permissive** .20 lb

Tel que trouvé		Tel que remis	
2: 200.0	3: 200.0	2: 200.0	3: 200.0
1: 200.0	4: 199.9	1: 200.0	4: 200.0
J		J	

Dans la tolérance sans réglage ☒

Dans la tolérance après réglage ☒

Hors tolérance ☐

Essai progressif	Poids Appliqué	Lecture tel que trouvé	Erreur: plus ou moins (d)	Erreur permissive (d)	Lecture tel que remis	Dans la ToléranceO/N
Zéro	0	0		0		O ☒ N ☐
	100	100.0		2		O ☒ N ☐
	200	200.0		2		O ☒ N ☐
	300	300.0		3		O ☒ N ☐
Charge Maximale*	400	400.0		3		O ☒ N ☐
						O ☒ N ☐
						O ☐ N ☐
						O ☐ N ☐
Zéro						O ☐ N ☐

*Charge maximale utilisé pour l'essai

Dans la tolérance sans réglage ☐

OBSERVATIONS:

NUMÉROS D'IDENTIFICATION DES POIDS:	40083-BE1-525-560		
N° du certificat de traçabilité du poids:	2013-2221-1311205	DATE D'ÉTALONNAGE POUR CLIENT: 14 juillet 08	PROCHAIN ÉTALONNAGE POUR CLIENT: juillet 09
RÉALISER PAR:	Dany Carean		Dany Carean
	Nom du technicien (en lettres capitales)		Signature du technicien
Le cas échéant:	*Nom du client (en lettres capitales)*		*Signature du client*

VF0005IR.r02, 04/05/01

003- Appendix C- Calibration Documents (page 47 of 51)

METTLER TOLEDO

RAPPORT D'ESSAI EXHAUSTIF

Nom du client	SBI inc.		N° DU TICKET SAV/ORDRE D'INTERVENTION		
Emplacement unité	Magasin		N° du client		
Marque/N° de modèle	BBA442		N° de série	2910997	
Capacité	35 kg ☑ lb	Nb.Divisions	17 500	Taille divisions	2g

L'équipement de pesage mentionné sur le présent rapport a été vérifié et/ou calibré en conformité avec la procédure Mettler Toledo Réf. VP0023IR, et la norme canadienne et/ou le manuel NIST N°., le cas échéant

VÉRIFICATIONS DES COINS **Poids Appliqué:** 10 kg **Erreur permissive** 5

Tel que trouvé	
2: 9.998	3: 9.996
1: 9.998	4: 9.996
J	

Tel que remis	
2: —	3: —
1: —	4: —
J	

Dans la tolérance sans réglage ☒

Dans la tolérance après réglage ☐

Hors tolérance ☐

Essai progressif	Poids Appliqué	Lecture tel que trouvé	Erreur: plus ou moins (d)	Erreur permissive (d)	Lecture tel que remis	Dans la ToléranceO/N
Zéro	0	0	0	0	0	O ☒ N ☐
	1	1.000	0	2	1.000	O ☒ N ☐
	5	4.998	2	5	5.000	O ☒ N ☐
	10	9.996	4	5	10.000	O ☒ N ☐
Charge Maximale*	20	19.992	8	5	20.000	O ☒ N ☐
	30	—	—	5	30.000	O ☒ N ☐
						O ☐ N ☐
						O ☐ N ☐
Zéro	0					O ☐ N ☐

*Charge maximale utilisé pour l'essai

Dans la tolérance sans réglage ☒

OBSERVATIONS:

NUMÉROS D'IDENTIFICATION DES POIDS:	40083-BE1-525-560		
N° du certificat de traçabilité du poids:	2013-2221-1311205	DATE D'ÉTALONNAGE POUR CLIENT: 14 juillet 08	PROCHAIN ÉTALONNAGE POUR CLIENT: juillet 09
RÉALISER PAR:	Dany Cazeau		
	Nom du technicien (en lettres capitales)		Signature du technicien
Le cas échéant:	*Nom du client (en lettres capitales)*		*Signature du client*

VF0005IR.r02, 04/05/01

003- Appendix C- Calibration Documents (page 48 of 51)

METTLER TOLEDO

RAPPORT D'ESSAI EXHAUSTIF

Nom du client	SBI inc.		N° DU TICKET SAV/ORDRE D'INTERVENTION		
Emplacement unité			N° du client	#6	
Marque/N° de modèle	BBA442		N° de série	2925028	
Capacité	35 kg ☒ lb	Nb.Divisions	17 500	Taille divisions	2g

L'équipement de pesage mentionné sur le présent rapport a été vérifié et/ou calibré en conformité avec la procédure Mettler Toledo Réf. VP0023IR, et la norme canadienne et/ou le manuel NIST N°., le cas échéant

VÉRIFICATIONS DES COINS **Poids Appliqué:** 10 kg **Erreur permissive** 5 grad

Tel que trouvé	
2: 9.996	3: 9.998
1: 9.996	4: 9.998
J	

Tel que remis	
2: —	3: —
1: —	4: —
J	

Dans la tolérance sans réglage ☒

Dans la tolérance après réglage ☐

Hors tolérance ☐

Essai progressif	Poids Appliqué	Lecture tel que trouvé	Erreur: plus ou moins (d)	Erreur permissive (d)	Lecture tel que remis	Dans la ToléranceO/N
Zéro	0	0	0	0	0	O ☒ N ☐
	5	4.998	1	2	5.000	O ☒ N ☐
	10	9.996	2	5	10.000	O ☒ N ☐
	20	19.998	4	5	20.000	O ☒ N ☐
Charge Maximale*	30	29.998	6	5	29.998	O ☒ N ☐
	20	19.998	4	5	20.000	O ☒ N ☐
	10	9.996	2	5	10.000	O ☒ N ☐
	5	4.998	1	2	5.000	O ☒ N ☐
Zéro	0	0	0	0	0	O ☒ N ☐

*Charge maximale utilisé pour l'essai

Dans la tolérance sans réglage ☐

OBSERVATIONS:

NUMÉROS D'IDENTIFICATION DES POIDS:	40083-BE1-525-560		
N° du certificat de traçabilité du poids:	2013-2221-1311205	DATE D'ÉTALONNAGE POUR CLIENT: 14 juillet 08	PROCHAIN ÉTALONNAGE POUR CLIENT: juillet 09
RÉALISER PAR:	Dany Caron	Dany Caron	
	Nom du technicien (en lettres capitales)	Signature du technicien	
Le cas échéant:	*Nom du client (en lettres capitales)*	*Signature du client*	

VF0005IR.r02, 04/05/01

003- Appendix C- Calibration Documents (page 49 of 51)

METTLER TOLEDO

RAPPORT D'ESSAI EXHAUSTIF

Nom du client	SBI inc.		N° DU TICKET SAV/ORDRE D'INTERVENTION		
Emplacement unité	Magasin		N° du client		
Marque/N° de modèle	Pelouze 4010		N° de série	123662	
Capacité	150 kg ☐ lb x	Nb.Divisions	750	Taille divisions	.2lb

L'équipement de pesage mentionné sur le présent rapport a été vérifié et/ou calibré en conformité avec la procédure Mettler Toledo Réf. VP0023IR, et la norme canadienne et/ou le manuel NIST N°., le cas échéant

VÉRIFICATIONS DES COINS **Poids Appliqué:** 20 Kg ~~non requis~~ **Erreur permissive**

Tel que trouvé	
2: 20.0	3: 20.0
1: 20.0	4: 20.0
J	

Tel que remis	
2: —	3:
1: —	4:
J	

Dans la tolérance sans réglage ☒

Dans la tolérance après réglage ☐

Hors tolérance ☐

Essai progressif	Poids Appliqué	Lecture tel que trouvé	Erreur: plus ou moins (d)	Erreur permissive (d)	Lecture tel que remis	Dans la ToléranceO/N
Zéro	0	0	0	0		O ☒ N ☐
	20 Kg	20.0	0	1		O ☒ N ☐
	40 Kg	40.0	0	1		O ☒ N ☐
	60 Kg	60.1	1	2		O ☒ N ☐
Charge Maximale*						O ☐ N ☐
						O ☐ N ☐
						O ☐ N ☐
						O ☐ N ☐
Zéro	0					O ☐ N ☐

*Charge maximale utilisé pour l'essai

Dans la tolérance sans réglage ☒

OBSERVATIONS:

NUMÉROS D'IDENTIFICATION DES POIDS:	40083-BE1-525-560		
N° du certificat de traçabilité du poids:	2013-2221-1311205	DATE D'ÉTALONNAGE POUR CLIENT: 14 juillet 08	PROCHAIN ÉTALONNAGE POUR CLIENT: juillet 09
RÉALISER PAR:	Dany Cheran		
	Nom du technicien (en lettres capitales)		Signature du technicien
Le cas échéant:	*Nom du client (en lettres capitales)*		*Signature du client*

VF0005IR.r02, 04/05/01

003- Appendix C- Calibration Documents (page 50 of 51)

METTLER TOLEDO

RAPPORT D'ESSAI EXHAUSTIF

Nom du client	SBI inc.		N° DU TICKET SAV/ORDRE D'INTERVENTION		
Emplacement unité	Expédition		N° du client	#6	
Marque/N° de modèle	BBA		N° de série	2925028	
Capacité	~~5000~~ 3000 kg ☐ lb x	Nb.Divisions	5000	Taille divisions	0.5 lb

L'équipement de pesage mentionné sur le présent rapport a été vérifié et/ou calibré en conformité avec la procédure Mettler Toledo Réf. VP0023IR, et la norme canadienne et/ou le manuel NIST N°., le cas échéant

VÉRIFICATIONS DES COINS **Poids Appliqué:** ~~441lb~~ 200 kg **Erreur permissive** 1d

Tel que trouvé	
2 —	3
1 —	4
J	

Tel que remis	
2 200.0	3 200.0
1 200.0	4 200.0
J	

Dans la tolérance sans réglage ☐

Dans la tolérance après réglage ☑

Hors tolérance ☐

Essai progressif	Poids Appliqué	Lecture tel que trouvé	Erreur: plus ou moins (d)	Erreur permissive (d)	Lecture tel que remis	Dans la ToléranceO/N
Zéro	0	0	0	0		O ☒ N ☐
	100kg=220lb	100.0		1		O ☒ N ☐
	200kg=441lb	200.0		2		O ☒ N ☐
						O ☐ N ☐
Charge Maximale*						O ☐ N ☐
						O ☐ N ☐
341.4	200kg=441lb	541.4		2		O ☒ N ☐
341.4	100kg=220lb	441.4		1		O ☒ N ☐
Zéro	0					O ☐ N ☐

*Charge maximale utilisé pour l'essai

Dans la tolérance sans réglage ☐

OBSERVATIONS:

NUMÉROS D'IDENTIFICATION DES POIDS:	40083-BE1-525-560		
N° du certificat de traçabilité du poids:	2013-2221-1311205	DATE D'ÉTALONNAGE POUR CLIENT: 14 juillet 08	PROCHAIN ETALLONNAGE POUR CLIENT: juillet 09
RÉALISER PAR:	Denis Carrea		Signature du technicien
	Nom du technicien (en lettres capitales)		
Le cas échéant:	*Nom du client (en lettres capitales)*		*Signature du client*

VF0005IR.r02, 04/05/01

003- Appendix C- Calibration Documents (page 51 of 51)

Date: 2010-01-08
ID: SBI-016
Référence: SBI-153

Moisture Content Standard		Lectures
(%)		(%)
12.7		12.7
23.6		23.6

0044- Appendix D4

Unit Owner's Manual

Max Caddy-2009

Appendix D-4

0044- Appendix D4 (page 2 of 48)

PSG
1700, Léon-Harmel
Québec (Québec)
G1N 4R9

Installation and operating instructions for the MAX CADDY wood furnace

READ THE MANUAL THOROUGHLY
BEFORE OPERATING THE FURNACE

CERTIFIED ACCORDING TO CAN/CSA B366.1 M91,UL391 4TH EDITION 2006, CAN/CSA C22.2 NO.236-05, UL 1995 3RD EDITION 2003, CSA B140.4-04 AND UL 727 9TH EDITION 2006

FURNACE MODELS INCLUDED IN THIS MANUAL

MAX CADDY WOOD AND COMBINATION FURNACE
20kW/25kW and UH-Max Caddy

Read these instructions carefully before installing and operating your furnace.

CONGRATULATIONS!

You have purchased one of the finest wood or combination furnaces available on the market.

We are confident that your furnace will provide years of comfort and safe operation.

Please keep this document!

45391E
08/21/2009

0044- Appendix D4 (page 3 of 48)

TABLE OF CONTENT

WOOD OR WOOD/ELECTRIC COMBINATION FURNACES **4**

1. CHIMNEY AND DRAFT **4**

2. SAFETY RULES **4**

GENERAL REQUIREMENTS 4
ODOUR FROM THE PAINT 5
ASH DISPOSAL 5
CREOSOTE BUILD-UP AND REMOVAL 5
SMOKE DETECTOR 6
DOOR GLASS 6
GLASS SPECIFICATIONS 6
ASH DRAWER 6
ASH GRATE 6

3. APPLIANCE INSTALLATION **7**

UNIT LOCATION 7
BLOWER INSTALLATION AT THE BACK OF THE UNIT 7
PC BOARD INSTALLATION 7
CLEARANCES TO COMBUSTIBLE MATERIALS 8
FLUE AND BAROMETRIC DRAFT CONTROL CONNECTION 9
DAMPER 10
COMBUSTION AIR 10
PARALLEL INSTALLATION 12
ELECTRICAL CONNECTIONS 13
MAX CADDY-WOOD ONLY *13*
MAX CADDY WOOD/ELECTRIC *14*
ELECTRICAL ELEMENT (MAX CADDY WOOD / ELECTRIC) 14
THERMOSTAT 15
Wood furnace only *15*
Combination wood-electric or wood-oil furnace *15*
TRIO furnace (wood-oil-electric or wood-electric-oil) *15*
FAN CONTROL 15
DOMESTIC WATER PRE-HEATING OPTION 15
INSTALLATION OF AN AIR CONDITIONING UNIT 16

4. OPERATING INSTRUCTIONS **17**

PC BOARD (CONTROL SYSTEM) 17
FIRST USE – GENERAL INFORMATION 17
FIRST USE - SETTTINGS 17
The use of the "BI-ENERGY" function *18*
MODES, OPTIONS, AND PROGRAMMING 18
The speeds *18*
System Balancing *19*

0044- Appendix D4 (page 4 of 48)

HEAT Mode (automatic heating) ... *19*
COOL Mode (air conditioning) ... *19*
CIRC (air circulation) ... *20*
MANU (manual heating) ... *20*
The Selections ... *21*
LIGHTING ... 21
PREHEATING ... 22
HEATING ... 22
EARLY SIGNS OF AN OVERFIRED FURNACE: ... 22
WOOD AS HEATING FUEL ... 22
PROLONGED POWER FAILURE ... 23
CHIMNEY FIRES ... 23
5. MAINTENANCE ... 24
MAINTENANCE OF THE EXCHANGERS ... 24
CHIMNEY MAINTENANCE ... 25
MAINTENANCE OF THE BLOWER MOTOR ... 25
FILTERS ... 25
DOOR GASKET MAINTENANCE ... 25
6. REPLACEMENT PARTS ... 26
DOOR GLASS ... 26
GASKET ... 26
7. GENERAL ELECTRIC DIAGRAM WITH BECKETT OIL BURNER ... 27
8. GENERAL ELECTRIC DIAGRAM WITH RIELLO OIL BURNER ... 28
9. ELECTRIC DIAGRAM WITH OPTIONAL ELECTRICAL ELEMENT ... 29
10. MAX CADDY TECHNICAL DATA ... 30
GENERAL TECHNICAL DATA ... 30
TECHNICAL DATA – ELECTRICAL ELEMENT ... 30
11. MAX CADDY BRICKS LAYOUT ... 31
12. TROUBLE SHOOTING ... 31
WOOD/OIL COMBINATION FURNACE ... 33
GENERAL NOTES ... 34
1. DRAFT AND CHIMNEY ... 34
2. OIL TANK AND PIPING ... 34
BURNER PUMP ... 34
3. APPLIANCE INSTALLATION ... 35
LOCATING THE UNIT ... 35
POSITIONING THE APPLIANCE ... 35
PIPE CONNECTOR AND DAMPER ... 36
COMBUSTION AIR ... 38
ELECTRICAL WIRING ... 38
THERMOSTAT ... 38

0044- Appendix D4 (page 5 of 48)

FAN CONTROL 38
COMBUSTION SAFETY CONTROL 38
COMBUSTION ADJUSTMENT AND VERIFICATION 39
ELECTRODES SETTING 40

4- APPLIANCE START-UP 40

5- PROLONGED CLOSING 40

6- MAINTENANCE 41

SERVICE 41
MAINTENANCE 41
FILTERS 42

7- ELECTRICAL DIAGRAMS 42

8- TECHNICAL DATA 45

LIMITED LIFETIME WARRANTY 46

REGISTER YOU WARRANTY ONLINE

To receive full warranty coverage, you will need to show evidence of the date you purchased your furnace. Keep your sales invoice. We also recommend that you register your warranty online at **www.psg-distribution.com**
Registering your warranty online will help us track rapidly the information we need on your furnace.

IMPORTANT NOTE:

THE INSTALLATION OF THIS CENTRAL HEATING SYSTEM MUST BE PERFORMED BY A QUALIFIED TECHNICIAN. PSG RESERVES ITSELF THE RIGHT TO VOID ITS WARRANTY OR DENY TECHNICAL ADVICE IF THE FURNACE HAS NOT BEEN SOLD OR INSTALLED BY A PROFESSIONAL.

0044- Appendix D4 (page 6 of 48)

SECTION A:

WOOD OR WOOD/ELECTRIC COMBINATION FURNACES

Take note that this furnace operates like an EPA wood burning stove. This applies to the lighting, the ember bed, and the minimum combustion air intake which was determined based on the use of good seasoned cordwood.

The Max Caddy furnace was tested in spirit of the CSA B415.1-00 Standard.

To optimize the efficiency of your furnace, here is some advice that you should follow when installing or operating your Max Caddy.

- Respect the local codes (when in doubt, consult your local dealer);
- Make sure your furnace is installed according to the instructions on the certification label;
- All controls and adjustments must be performed by a qualified technician. The blower speed must conform to the recommendations of local codes and should respect the static pressure ranges in the warm air plenum of the furnace.

1. CHIMNEY AND DRAFT

This furnace must be connected to a chimney certified for use with wood burning heating appliances. A 7-inch chimney and connector are recommended for the Max Caddy if it is used as a wood-oil unit or a wood-oil-electric unit. If an oil option may be installed in the future, we also recommend a 7-inch chimney. If the furnace is to be used as a wood only unit, then a 6-inch chimney is recommended.

The unit is not to be connected to a chimney flue serving another appliance.

If the chimney draft exceeds 0.06 IN.W.C., a barometric draft control should be installed on the smoke pipe. Never install a manual damper.

The barometric control must be adjusted so that the maximum draft measured at the furnace outlet does not exceed -0.06 IN.W.C. Please note that a draft exceeding 0.06 IN.W.C. will reduce the efficiency and could produce an uncontrollable fire. **On the other hand, the minimum draft required is 0.04 IN.W.C. in the evacuation pipe on the wood side, no matter what type of furnace (WOOD, WOOD / ELECTRIC OR WOOD / OIL).**

The adjustment should in no case be modified to increase combustion.

2. SAFETY RULES

GENERAL REQUIREMENTS

- Make sure the chimney outlet and the pipes are clean and in good condition.
- DO NOT USE CHEMICAL PRODUCTS OR LIQUIDS TO LIGHT THE FIRE.
- Do not burn wood coated with paint, glue or chemical products.
- DO NOT BURN WASTES OR FLAMMABLE LIQUIDS SUCH AS GASOLINE, NAPHTHA, MOTOR OIL, OR OTHER UNSUITABLE MATTERS.
- Do not install an automatic feeder on this furnace.
- Do not store wood in the vicinity of the furnace. Respect the required clearances between combustible materials and the source of heat.

0044- Appendix D4 (page 7 of 48)

W A R N I N G

-THE ASH DRAWER AND EXCHANGERS ACCESS PANEL GET VERY HOT.
-DO NOT MANIPULATE WITH BARE HANDS.

ODOUR FROM THE PAINT

It is normal that smoke and odours emanate from the unit when you first light it. It is recommended to burn it at high rate and ventilate the building until the odours disappear. The smoke is not toxic.

ASH DISPOSAL

Ashes must be placed in a metal container with a tight fitting lid. The container should be stored outdoors, well away from combustible materials. This container should not receive any other type of waste. If the ashes are meant to be buried in soil, wait until all embers have thoroughly cooled before burying.

CREOSOTE BUILD-UP AND REMOVAL

When wood is burned slowly, it produces tar and other organic vapours which, when combined with moisture, form creosote. The creosote vapours condensate in a relatively cool chimney flue. As a result, creosote residues accumulate inside the flue lining and the exchangers.

N.B.: To minimize the frequency of the chimney cleaning, buy your firewood at least one year before using it. Store it in a dry place in order to obtain the minimum moisture rate and optimize the efficiency. Do not store wood or combustible materials within the installation minimum clearances or the space required to reload the appliance and remove ashes.

When ignited, creosote produces an extremely hot fire inside the chimney.

In the first year of use, in order to avoid chimney fires, inspect the chimney system at regular intervals to determine a cleaning cycle. Depending on the type of wood used and its quality, a semi-annual cleaning may be required. A yearly cleaning is mandatory.

If a significant layer of creosote has accumulated, it must be removed immediately to eliminate the risk of chimney fire.

Remember that a small, hot fire is preferable to a large smouldering one to prevent creosote build-ups within the system. Prepare an emergency procedure in case of a chimney fire.

It is recommended to clean the heat exchangers thoroughly at the end of season in order to prevent corrosion.

0044- Appendix D4 (page 8 of 48)

SMOKE DETECTOR

We highly recommend the use of a smoke detector. It must be installed at least 15 feet (4,57 m) from the appliance in order to prevent undue triggering of the detector when reloading.

DOOR GLASS

To maintain a clean and safe installation, do not build your fire too close to the glass or allow logs to lean on the glass.

Do not operate your furnace at too low a setting. Keep the air inlet opened long enough during the fire start-up to prevent the fire from smouldering, which could stain the glass.

An intense fire will help keep the glass clean. However, in the event that your glass gets stained, which should not occur under normal operating conditions, you will have to clean it using a wet cloth and a fireplace glass cleaner. Clean the glass **ONLY** when the unit has cooled down. Do not use abrasive cleanser. Fireplace glass cleaners are available in most home centers and specialty hearth retailers.

WARNING: Avoid knocking or scratching the glass. I could crack or break.

GLASS SPECIFICATIONS

The glass is made of 3/16” (5mm) thick Pyroceram.

Do not operate your wood furnace with a broken glass, as this could seriously damage your furnace.

You can purchase a replacement glass from your PSG dealer.

ASH DRAWER

Your furnace is equipped with an ash drawer to collect ashes produced by the combustion of wood. This drawer must not be left open during combustion as this may cause over firing and serious damages to the furnace.
The drawer must be emptied regularly.

It is important that the door and the ash drawer be kept closed while the appliance is in use.
Maintain all gaskets in good condition; in case of deterioration, contact your dealer for a genuine replacement gasket.

ASH GRATE

You must replace the ash grate if it is damaged and a replacement may be obtained from your dealer.

0044- Appendix D4 (page 9 of 48)

3. APPLIANCE INSTALLATION

UNIT LOCATION

The furnace must be installed where outside air supply is sufficient for proper combustion. In airtight houses, it might be necessary to install an outside air intake. If needed, install

BLOWER INSTALLATION AT THE BACK OF THE UNIT

Once the cold air return box configuration is chosen (cold air ducting support located on top, at the right or at the left of the cold air return box or the top cold air plenum option) insert the bend on the bottom of the blower box inside the opening at the back of the furnace. Slide the edges of the blower box on each side of the furnace's side panels to align the holes. Secure it using fastening screws. Use elevator bolts if needed.

PC BOARD INSTALLATION

The PC board can be installed on either side of the furnace. Remove the 4 screws secured on the side of the furnace where you wish to install the PC board (keep these screws). Remove the lid of the PC board. Secure the PC board where you removed the screws from the furnace. Once the electrical connections are made on the PC board, screw the lid back on the PC board.

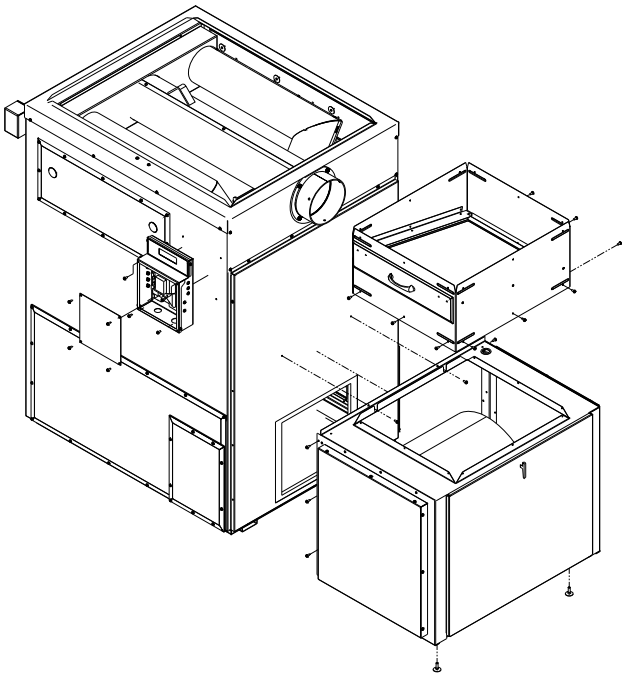

The furnace must be positioned so that the connector is as short as possible; minimize the use of 90° elbows.

The owner must ensure a proper installation to allow for a safe operation of the appliance.

0044- Appendix D4 (page 10 of 48)

CLEARANCES TO COMBUSTIBLE MATERIALS

N.B. This appliance must be installed according to the instructions on the unit's certification label.

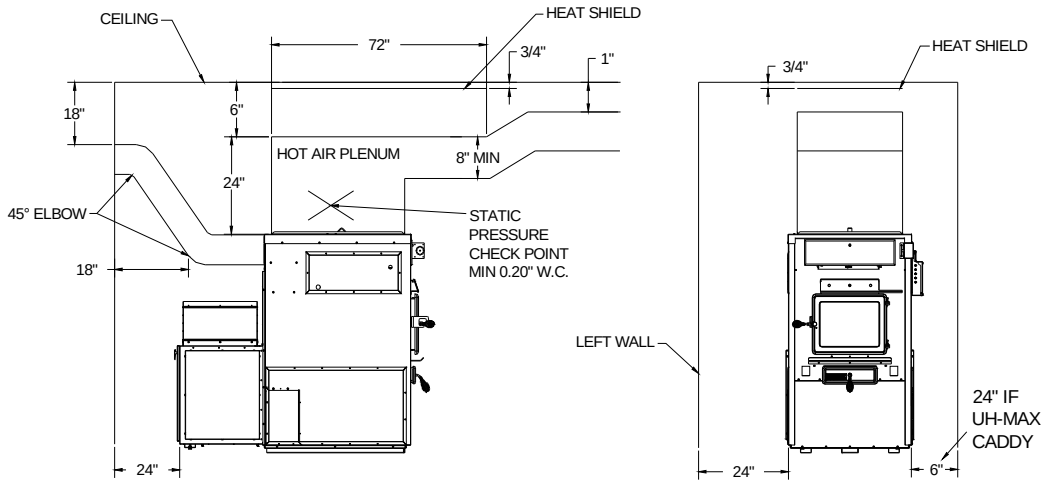

N.B. THE SIZE OF THE AIR RETURN DUCT SHOULD BE AT LEAST EQUAL TO THE SIZE OF THE COLD AIR PLENUM OPENING.

FIRST 6 FEET OF DUCT INCLUDING WARM AIR PLENUM	*6 in.(150 mm) with a shield at ¾"
PLENUM AFTER THE FIRST 6 FEET	1 in. (25 mm)
REAR (INCLUDING CLEARANCE FOR MAINTENANCE)	24 in. (610 mm)
SIDES (INCLUDING CLEARANCE FOR MAINTENANCE)	24 in.(610 mm)
OIL BURNING UNIT FLUE PIPE	9 in.(230 mm)
WOOD BURNING FURNACE FLUE PIPE	18 in.(455 mm)
** FLOOR	0 in.(0 mm)

*** Supplied with the furnace.**

****The furnace can be installed on a combustible floor. The us of a floor protector exceeding the furnace by 8 inches on the sides and 18 inches in front is highly recommended.**

0044- Appendix D4 (page 11 of 48)

FLUE AND BAROMETRIC DRAFT CONTROL CONNECTION

Before connecting the stove pipe, make sure you have removed any accessory from the flue pipe such as the scraper, shovel, and the poker.

The flue outlet on the Max Caddy furnace is 6" in diameter and the wood only or wood/electric models may be installed with a 6" chimney approved for use with wood burning heating appliances (2100°F). However, we recommend the use of a 7" chimney if the retrofit to a wood/oil configuration is probable. In that case, a 6" to 7" reducer must be installed at the flue outlet of the furnace. If the draft exceeds 0.06 IN.W.C., a barometric control must installed. **Never install a manual damper.** Secure the exhaust pipe to the flue adapter with three screws.

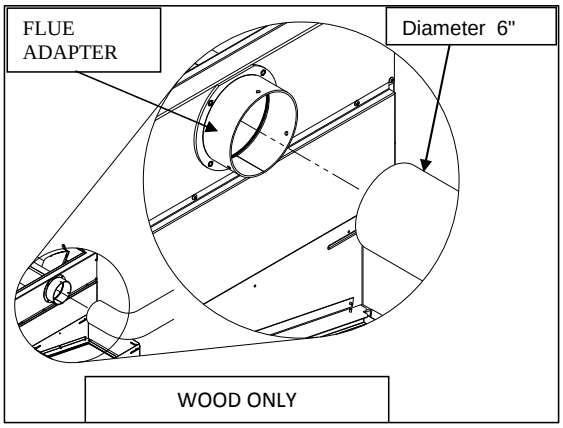

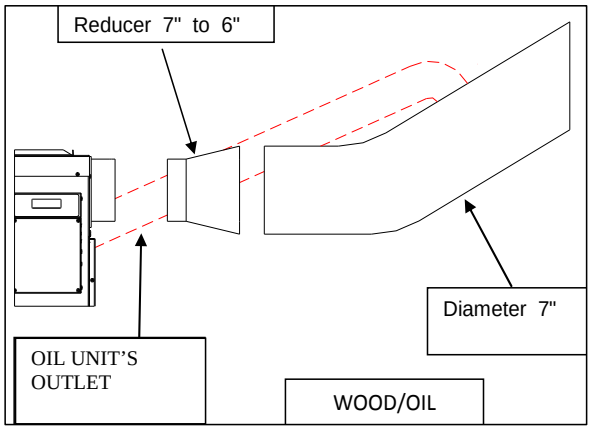

For a proper installation, follow the advice below:

1. All the exhaust pipe joints must be secured with three screws. **Make sure that each screw goes through the inner wall of both connectors (male and female).** See pictures below showing a male-female coupling.

PROPER INSTALLATION

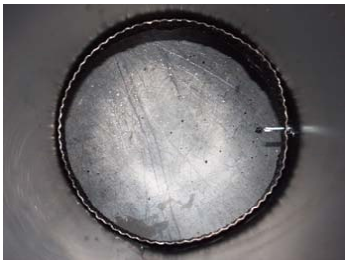

IMPROPER INSTALLATION

CAUSES RESTRICTION

2. A minimum rise of ¼" per horizontal foot must be respected.

0044- Appendix D4 (page 12 of 48)

DAMPER

If the draft exceeds 0.06 INW.C., a barometric damper must installed. The barometric damper must be adjusted so that the maximum draft measured at the furnace outlet is limited to 0.06 IN.W.C. Please note that a draft higher than 0.06 IN.W.C. will reduce efficiency and could result in an uncontrollable fire. **On the other hand, the minimum draft to be respected is 0.04 IN.W.C. in the evacuation pipe on the solid fuel side, no matter what type of furnace is use (WOOD, WOOD/ELECTRIC, WOOD/OIL, or WOOD/OIL/ELECTRIC).**

COMBUSTION AIR

When the furnace and the chimney are completely cold, it may be necessary to provide fresh air by opening a door or a window for a few minutes while lighting the fire.

Take note that a house constructed or renovated in order to be airtight may lack the volume of fresh air necessary for the proper combustion of a solid-fuel heating appliance.

In such a case, when starting up the fire, do not operate appliances that evacuate air outside the house, such as:

- Range hood
- Air exchanger
- Clothes dryer
- Bathroom fan
- Ventilated central vacuum system

A fresh air supply may be necessary to prevent solid fuel units from rejecting products of combustion into the house. The indications used to determine if an additional fresh air supply is necessary are not appropriate for all the situations. When in doubt, it is recommended to install a fresh air supply.

A fresh air supply may be needed if:

- Solid fuel units present anomalies, such as irregular draft, smoke return, bad combustion, and/or reversed draft (whether there is combustion or not);
- Existing solid fuel units such as a stove or fireplace release odours, heat badly, cause smoke returns, or reversed draft (whether there is combustion or not);
- The opening of a window, even slightly, in calm weather (windless), eliminates every problem mentioned above ;
- The house is equipped with a tight vapour barrier and adjusted windows, and/or is equipped with an interior air mechanical evacuation device ;
- There is excessive condensation on the windows in winter; and
- The house is equipped with a ventilation system.

If, according to these symptoms or other similar ones, there is insufficient combustion air, it is necessary to ensure an additional combustion air supply.

Additional combustion air can be provided following the following methods, provided that they satisfy chapter 4 of the CSA B365 standard for Canada:

- Direct connection: solid fuel units can be connected directly to a source of new combustion air only if they are certified for this kind of installation, which must respect the manufacturer's instructions. The MAX Caddy can be installed with an optional sealed fresh air kit that has been tested with the unit. Consult your dealer.
- Indirect method: new combustion air can be brought into a pipe located within approximately 300mm (12 inches) of the unit. If the pipe is too close to the furnace, it may interfere with its operation.
- Mechanical ventilation system: if the house is equipped with a ventilation system (air exchanger or heat recovery), the ventilation system may provide sufficient auxiliary air to the solid fuel unit. Otherwise, the owner should be informed that the ventilation system may have to be rebalanced by a ventilation technician after the installation of the solid fuel unit.

0044- Appendix D4 (page 13 of 48)

NOTE:

It is recommended to install an outside air inlet with a diameter of at least 4 inches in the room where the heating appliance is installed (see drawing below). It is preferable to choose a wall which is not exposed to dominant winds, depending on the conditions surrounding your house.

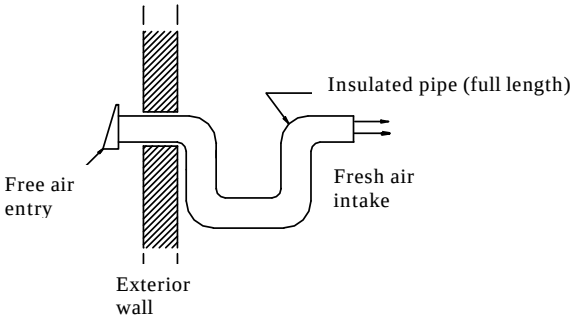

N.B. The owner of the furnace is responsible for the room's air quality in case of negative pressure or temporary negative pressure.

0044- Appendix D4 (page 14 of 48)

Parallel Installation

The installation of the Max Caddy with another furnace using the same ductwork is not allowed in Canada. **This type of installation is only allowed in the United States**. Ideally, the maximum BTU input of the existing oil, gas, or electric furnace should be equal or higher than the maximum BTU input of the wood furnace. It is mandatory to respect minimum clearances between the ductwork and combustible material as if the wood furnace was installed as a standalone unit. The ductwork and furnace should be adjusted in order to reach a static pressure of at least 0.20 IN.WC, but not more than 0.50 IN.WC. A back-flow damper should be installed in the plenum. The back-flow damper assures that when either unit is operated by itself, the hot air will flow into the home, and not back through the other furnace. Depending on your installation (see figures examples below), a back-flow damper may be required in each plenum.

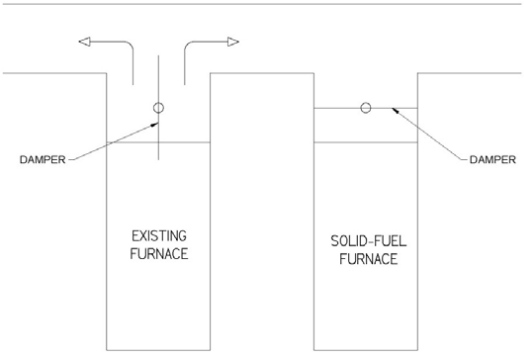

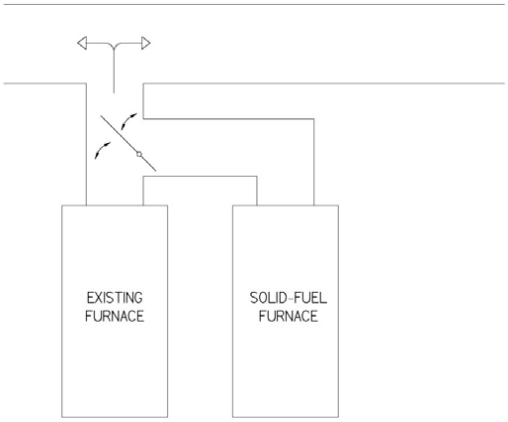

0044- Appendix D4 (page 15 of 48)

ELECTRICAL CONNECTIONS

The following instructions do not supersede the local code.

MAX CADDY-WOOD ONLY

On the Max Caddy, a RTD (resistance temperature detector) is installed on the side of the hot air plenum with the support provided (two holes are pre-drilled on the edge of the furnace), and connected to the PC board. The RTD is a sensor (probe type) that reads the temperature inside the hot air plenum.

Then, Install the damper motor on the right hand side of the front of the unit, above the door (use the pre-drilled holes). The chain that links the air inlet damper to the motor must have a play of 1/8"and must be secured in place by the hook. When there is no call for heat, the air inlet damper must be completely closed and the chain must be hooked to the servo-motor at the "8 o'clock" position.

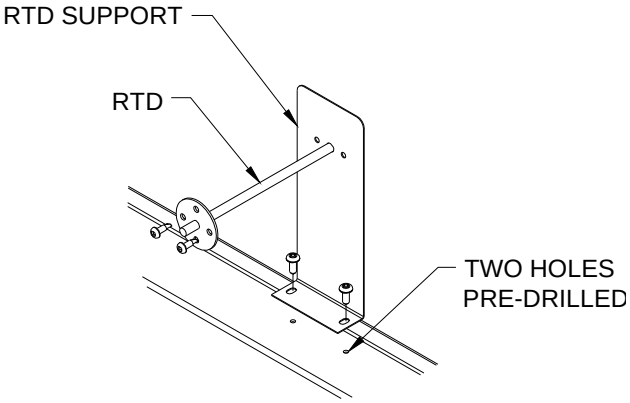

It is important that the RTD and its support be properly fixed onto the ducting system at the right location.

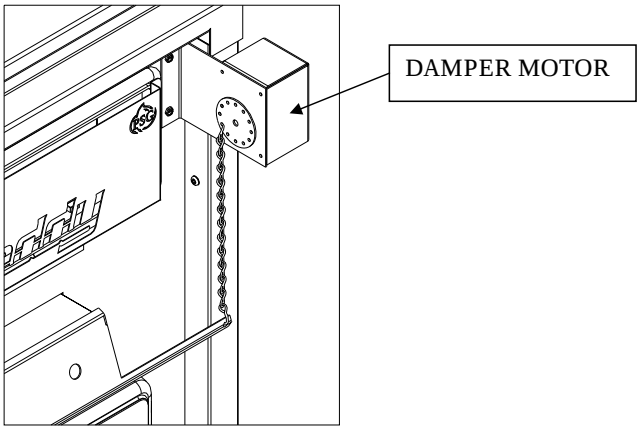

WARNING: USE WIRING SUITABLE FOR 75° C (not supplied)

13

0044- Appendix D4 (page 16 of 48)

MAX CADDY WOOD/ELECTRIC

The high limit control is a manual reset thermostatic sensor that is located inside the electrical unit. The electric unit must be connected as shown on the diagram (see WIRING DIAGRAM). Install the RTD control on the support provided, at the determined location (see diagram in previous section). The connections must conform to the diagram.

Install the damper motor on the right hand side of the front of the unit (see picture in previous section), above the door (use the pre-drilled holes). The chain that links the air inlet damper to the motor must have a play of 1/8". When there is no call for heat, the air inlet damper must be completely closed and the chain must be hooked to the servo-motor at the "8 o'clock" position.

WARNING: USE WIRING SUITABLE FOR 75° C

ELECTRICAL ELEMENT (MAX CADDY WOOD / ELECTRIC)

The WOOD / ELECTRIC combination model uses two thermostats: one thermostat controls the electric heating, and the other one controls the wood heating. With this system, the electric heating has priority over the wood heating. When the thermostat activates the electric heating, the air inlet damper closes down (if opened), the blower starts, and the electric elements are successively activated per block of 5 kW. When the call for electric heating is satisfied, the wood system will take over if the starting point of the wood system thermostat is superior to that of the electric system. Therefore, under normal wood-electric combination use, you should set the wood system thermostat 2° to 4° higher than the electric system thermostat. The bigger the gap, the more the wood heating will contribute to the overall heating needs.

If the temperature of the electric unit exceeds the high limit , the thermostatic sensor will disengage the elements. To reactivate, press the red "manual reset" button on the thermostatic sensor (L-170 Thermodisc) after finding and fixing the problem that has caused the unit to overheat (static pressure too high, fan breakdown, etc.)

INSIDE VIEW OF THE ELECTRIC ELEMENT

0044- Appendix D4 (page 17 of 48)

THERMOSTAT

Wood furnace only

The thermostat must be installed on an inside wall and located where it is not likely to be affected by the draft coming from an air outlet. It must be installed at a minimum of 55 inches above the floor.

Combination wood-electric or wood-oil furnace

The combination model uses two thermostats which must be located at the same height from the floor. When the main thermostat (wood) calls for heat and the demand cannot be satisfied by the furnace with wood as a combustible, the option (oil burner or electric unit) will take over and maintain the house at the temperature programmed on the second thermostat (option). If the thermostats use a dry contact, hook-up the main thermostat (wood) to the WOOD MECH port on the PC board and the option's thermostat to the USER MECH port. If the thermostats send a 24 volt signal to the appliance, hook-up the main thermostat (wood) to the WOOD 24V port on the PC board and the option's thermostat to the USER 24V port.

TRIO furnace (wood-oil-electric or wood-electric-oil)

The trio model also uses two thermostats which must be located at the same height from the floor. When the main thermostat (wood) calls for heat and the demand cannot be satisfied by the furnace with wood as a combustible, the first option will take over and maintain the house at the temperature programmed on the second thermostat (option). Should the first option be unable to satisfy the call for heat, the second option will take over and maintain the house at the temperature programmed on the second thermostat (option). If the thermostats use a dry contact, hook-up the main thermostat (wood) to the WOOD MECH port on the PC board and the option's thermostat to the USER MECH port. If the thermostats send a 24 volt signal to the appliance, hook-up the main thermostat (wood) to the WOOD 24V port on the PC board and the option's thermostat to the USER 24V port.

FAN CONTROL

We recommend that the HEAT mode be programmed for the MAX Caddy. Under the HEAT mode, the distribution blower uses various speeds that are controlled by the PC board based on the hot air plenum temperature. The plenum temperature is read by the RTD temperature probe. The manufacturer's programmed settings should provide the most efficient operation for a majority of installations. The PC board also has a manual mode ("MANU" – consult the MODES section of this manual). Under the manual mode, the MAX Caddy operates as a conventional furnace. That is, the distribution blower starts at the speed programmed in the PC board (one single speed) based on only one temperature point read by the RTD probe inside the hot air plenum.

The adjustment of all controls must be performed by a qualified technician. In order to obtain a continuous air circulation during summer, you simply need to change the PC board mode to "CIRC". To do so, consult the MODES section of this manual.

It is not recommended to let the blower run on the continuous mode when heating with wood since the wood furnace must reach a certain temperature before the blower starts in order to operate efficiently.

DOMESTIC WATER PRE-HEATING OPTION

A water heating loop option is also available to pre-heat domestic water using the energy produced by the Max Caddy wood furnace. This water loop kit will be inserted between the wood combustion chamber and the heat exchangers. When heating with wood, the heat from the furnace will pre-heat domestic water that will be stored in a feed tank before entering your existing water heater. Removable panels are installed on both sides of the furnace for quick and easy installation of the loop. A 24 volt solenoid valve must be installed at the inlet of the loop and must be connected to the WATR SOLN terminal on the PC board; when the plenum temperature reaches 140°F, the valve opens to allow water circulation. It closes when the temperature drops below 120°F to prevent overcooling the combustion chamber during low firing rates.

0044- Appendix D4 (page 18 of 48)

The WATR SOLN terminal may also be used to activate the 24 volt relay of a humidifier installed in the system which, when connected to the PC Board, will be activated and deactivated at the same temperatures as the water solenoid valve (140°F et 120°F).

COMPLETE INSTALLATION AND OPERATION INSTRUCTIONS FOR THE HOT WATER LOOP KIT ARE SUPPLIED WITH THE KIT AND CAN BE DOWNLOADED FROM THE PSG WEB SITE AT WWW.PSG-DISTRIBUTION.COM.

INSTALLATION OF AN AIR CONDITIONING UNIT

The MAX Caddy wood furnace has been tested with an optional air conditioning unit. If this option is chosen, we recommend an installation as per the graphic provided below. This installation will provide the most efficient and safe operation of the air conditioning unit using the distribution blower of the MAX Caddy furnace during summer. In order to complete the installation of an air conditioning unit, the main thermostat must be a “heat/cool” type. Furthermore, the PC board of the furnace must be in a COOL mode and the desired distribution blower speed must be programmed (see MODES section for complete instructions). It must be noted that upon thermostatic demand for cooling, the distribution blower will start immediately.

The capacity and characteristics of the air conditioning unit that has been tested with the MAX Caddy are stated below. The use of another brand with similar capacity and characteristics is adequate.

Condenser brand: Goodman GSX13048
Capacity: 4 ton
Coil type: Type A, CAUF uncased indoor coil.

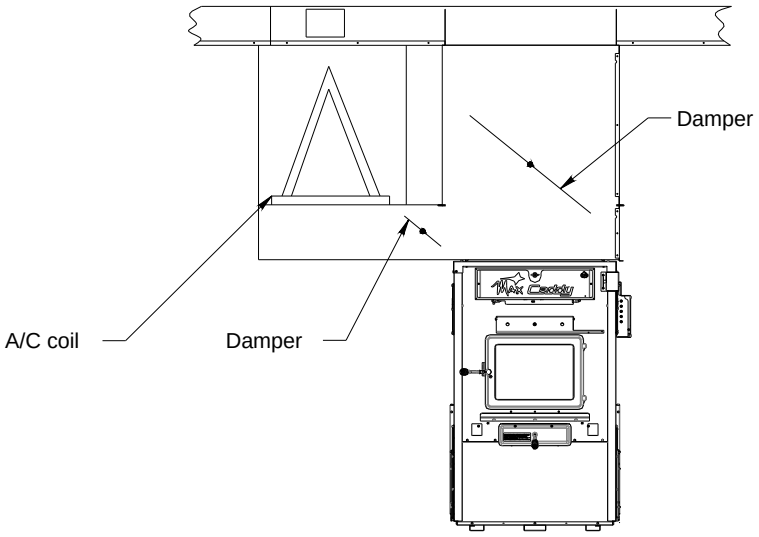

Recommended Installation

0044- Appendix D4 (page 19 of 48)

4. OPERATING INSTRUCTIONS

PC BOARD (CONTROL SYSTEM)

On the Max Caddy furnace, a new electronic control was developed. This system is more polyvalent. All connections are done from the PC board. There are connector ports available for all components and options. Under the HEAT mode, a logic was developed to provide you with the best comfort and efficiency; when you are heating with wood, the distribution blower starts at speed #1 based on a preselected temperature programmed into the PC board (this temperature is called the KIP – *Kick-in Point*). The temperature is read by the RTD probe located inside the hot air plenum. As the temperature continues to rise inside the hot air plenum, the PC board changes the speed of the blower to speed #2. This speed should maintain the most efficient temperature (BEP – *Best Efficiency Point*) inside the hot air plenum. The BEP has been set at 160F by the manufacturer when wood supplies the energy required for heat. If the optional oil burner or electrical unit provide the heat, the BEP is set at 150F. Whenever the temperature inside the hot air plenum continues to rise above the BEP, the PC board selects a higher speed in order to stabilize the temperature into the ducting system and therefore maintain the BEP.

In the case of the electrical or oil option, the blower starts as soon as that there is a request for heat from the option's thermostat. In other words, for security reasons, the distribution blower does not wait for a minimum temperature to be reached inside the hot air plenum before starting. However, the rest of the logic remains the same. That is, for as long as there is a heat demand, the PC board will vary the distribution blower's speed in order to maintain the BEP inside the hot air plenum.

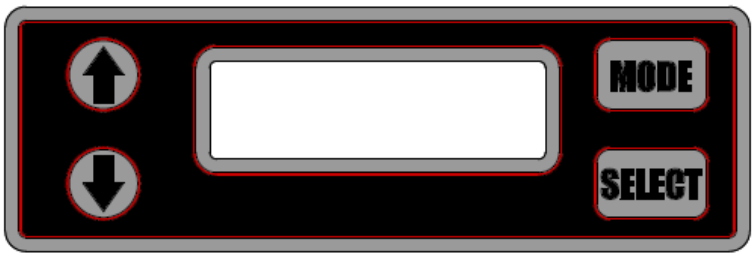

FIRST USE – GENERAL INFORMATION

The RTD probe reads the temperature inside the hot air plenum and plays the same role as a mechanical fan limit control found on most conventional wood furnaces. The main difference is that the RTD is connected to a PC board. It is an *electronic* fan limit. First, you must configure your PC board. In order to do so, it is important to know which options are installed on your furnace. During the start-up, the PC board will display some information such as the name of the company, the version of the program, as well as a four-digit number corresponding to the default configuration of the furnace.

FIRST USE - SETTTINGS

Using the arrows, you must select the four-digit number corresponding to your installation as per the table below When your selection is made, push the SELECT button in order to save your setting. Should you need to change this selection, unplug the electrical power and put it back on. Maintain the MODE button pressed for a few seconds. You will then be able to select the option corresponding to you installation.

0044- Appendix D4 (page 20 of 48)

Table 1 - Configuration

1 1 1 1	Wood only
2 2 2 2	Wood-oil combo
3 3 3 3	Wood-electric combo
4 4 4 4	Trio: wood followed by oil and electricity
5 5 5 5	Trio: wood followed by electricity and oil
6 6 6 6	Bi-energy

The use of the "BI-ENERGY" function

The bi-energy function is used when a local utility company (Hydro-Quebec for instance) offers a bi-energy program under which a preferential rate is given, provided that the appliance is equipped with an electronic control that guaranties the use of a particular source of energy (ex: electricity) based on a given criterion (ex: the outdoor temperature).

When the MAX Caddy is programmed for bi-energy, a temperature sensor (normally open contact) is connected to the PC board (see electric diagram – "BIENERGY" port). The contact remains open for as long as the outside temperature is above a certain value (this reference value is programmed into the system provided by the utility company). As long as the contact remains open, the electrical unit supplies the heat when the wood is not able to satisfy the thermostatic demand. If, however, the outside temperature reaches a level below the reference value, the contact closes and the oil unit is used as the option for heat if the wood is not able to satisfy the thermostatic demand.

MODES, OPTIONS, AND PROGRAMMING

Your PC board is equipped with four operating modes : HEAT (automatic heating), COOL (air conditioning), CIRC (recirculation), and MANU (manual heating). You can pass from one mode to the other by pressing on the arrows buttons. For each mode, some selections are available. A definition is provided below (see : "*The Selections*").

The speeds

Your furnace is equipped with a 4-speed blower. Using the PC board, we have created 6 functional speeds. Refer to Table 2 below for the various speed configurations.

Table 2 – The Speeds

Speed	Corresponding data	CFM*	Static pressure
1	Blower speed #1 using 98V	600	0.2'' H_2O
2	Blower speed #1 using 115V	760	0.2'' H_2O
3	Blower speed #2 using 98V	840	0.2'' H_2O
4	Blower speed #2 using 115V	950	0.2'' H_2O
5	Blower speed #3 using 115V	1150	0.2'' H_2O
6	Blower speed #4 using 115V	1260	0.2'' H_2O

*These results were measured at exit of plenum during laboratory tests. Results may vary depending of the configuration and installation.

0044- Appendix D4 (page 21 of 48)

System Balancing

It is important to call upon a professional installer for the installation of the furnace and the ducting system configuration. Certain check-ups must be performed and certain rules must be respected in order not to damage the blower. When all components are installed on the furnace and the ducting system is connected to the various rooms of the house, you must balance the ducting system. In order to do so, start the furnace blower by selecting the recirculation mode (CIRC). Then, in the FAN section, use the arrows to select speed #4 (refer to Table 2). It is important to respect the velocity in the main duct, the secondary ducts, as well as the velocity at the room outlets. The static pressure of your system must be adjusted to at least 0.2 IN.W.C. and must not exceed 0.5 IN.W.C. Finally, make sure that you never exceed the maximum blower motor full load amperage.

HEAT Mode (automatic heating)

Operation

When the temperature in your house is below the value at which your wall thermostat is programmed, a signal is sent to your furnace through the PC board, activating the motorized damper located in front of the furnace and thus allowing more oxygen to the fire. The RTD temperature probe, located inside the hot air plenum of your furnace, reads the plenum temperature continuously. When the temperature reaches the start-up value selected by the user (KIP – *Kick-in Point*), the distribution blower starts functioning at the minimum speed. Thereafter, the blower increments its speed until it reaches the best efficiency point (BEP) determined by the manufacturer. If the temperature inside the hot air plenum exceeds the limit determined by the manufacturer, the blower automatically selects the maximal speed and the motorized damper closes in order to slow down combustion. When the temperature returns to a safe level, the blower speed gradually returns to the speed required to maintain the BEP.

Programming

Make sure that your wall thermostat is well connected to the PC board. Make sure that the right port has been selected based on the type of thermostat (e.g. 24VAC or Millivolt).

In the MODE menu, select HEAT by pushing the SELECT button. Then, using the arrows buttons, choose from the different selections: KIP, TEMP, or UNIT. Consult the "**Selections**" section in order to obtain a complete definition of the terms KIP, TEMP, and UNIT.

When your choice is made, press SELECT. Then, use the arrows to make the appropriate adjustment. Press SELECT to memorize your adjustment. To change the selection (KIP, TEMP, or UNIT) push an arrow button. To go back to the main menu (HEAT, COOL, CIRC, MANU), push on the MODE button. After two minutes of inactivity on the keyboard, the display will shut itself off.

COOL Mode (air conditioning)

Operation

If an air conditioning unit is installed, the PC board will have to be connected to a dual-function wall thermostat (e.g. "heat/cool") in order to synchronize the start of the furnace blower with the start of the air conditioning condenser. Upon receiving the wall thermostat's signal, the furnace blower will start functioning at the speed selected by the user.

Programming

Make sure that your wall thermostat is well connected to the PC board. Make sure that the right port has been selected based on the type of thermostat (e.g. 24VAC or Millivolt).

0044- Appendix D4 (page 22 of 48)

In the MODE menu, select COOL by pushing the SELECT button. Then, using the arrows buttons, choose from the different selections: TEMP, UNIT, or FAN. Consult the "**Selections**" section in order to obtain a compete definition of the terms TEMP, UNIT, and FAN.

When your choice is made, press SELECT. Then, use the arrows to make the appropriate adjustment. Press SELECT to memorize your adjustment. To change the selection (TEMP, UNIT, or FAN) push an arrow button. To go back to the main menu (HEAT, COOL, CIRC, MANU), push on the MODE button. After two minutes of inactivity on the keyboard, the display will shut itself off.

CIRC (air circulation)

Operation

This mode is used to circulate air during summer. Thus you will benefit from your ducting system to circulate fresh air from your basement throughout the house.

Programming

In the MODE menu, select CIRC by pushing the SELECT button. Then, using the arrows buttons, choose from the different selections: TEMP, UNIT, or FAN. Consult the "**Selections**" section in order to obtain a compete definition of the terms TEMP, UNIT, and FAN.

When your choice is made, press SELECT. Then, use the arrows to make the appropriate adjustment. Press SELECT to memorize your adjustment. To change the selection (TEMP, UNIT, or FAN) push an arrow button. To go back to the main menu (HEAT, COOL, CIRC, MANU), push on the MODE button. After two minutes of inactivity on the keyboard, the display will shut itself off.

MANU (manual heating)

Operation

The mode allows you to run your system manually without taking into account the blower variation around the BEP (*Best Efficiency Point*). Therefore, you will simply have to select the KIP (i.e. *Kick-in Point* - the hot air plenum temperature at which the blower will start), as well as the blower speed based on your system's static pressure. When the temperature in your house will go below the value at which your wall thermostat is programmed, a signal will be sent to your furnace through the PC board, activating the motorized damper located in front of the furnace and allowing more oxygen to the fire. The RTD (temperature sensor), located in the hot air plenum of your furnace, will read the plenum temperature. When the temperature reaches the start-up value selected by the user (KIP), the blower will start functioning at the speed selected by the user. If the temperature exceeds the limit determined by the manufacturer, the blower will automatically select the maximal speed and the front air damper will close in order to slow down combustion. When the temperature returns to a safe level, the blower will return to the speed selected by the user.

Programming

Make sure that your wall thermostat is well connected to the PC board. Make sure that the right port has been selected based on the type of thermostat (e.g. 24VAC or Millivolt).

In the MODE menu, select MANU by pushing the SELECT button. Then, using the arrows buttons, choose from the different selections: KIP, TEMP, UNIT, or FAN. Consult the "**Selections**" section in order to obtain a compete definition of the terms KIP, TEMP, UNIT, and FAN.

When your choice is made, press SELECT. Then, use the arrows to make the appropriate adjustment. Press SELECT to memorize your adjustment. To change the selection (KIP, TEMP, UNIT, or FAN) push an arrow

0044- Appendix D4 (page 23 of 48)

button. To go back to the main menu (HEAT, COOL, CIRC, MANU), push on the MODE button. After two minutes of inactivity on the keyboard, the display will shut itself off.

The Selections

KIP (*Kick-in Point* - start-up temperature of the furnace blower)

Using the arrows, increase or decrease the temperature at which the furnace distribution blower will start functioning. You can adjust the temperature between 107°F (42°C) à 132°F (56°C) . After two minutes of inactivity on the keyboard, the display will shut itself off. The KIP must be programmed if the furnace is operated under the HEAT or MANU modes.

TEMP (Temperature)

By pushing the arrows, you will see the current temperature inside the main hot air plenum of your furnace. After two minutes of inactivity on the keyboard, the display will shut itself off. The TEMP selection has no impact on the operation of the furnace. It is offered as a practical way for an installer or a technician to quickly obtain the temperature inside the hot air plenum under the HEAT or MANU modes if a problem arises and the temperature must be known in order to trouble shoot the furnace.

UNIT (measuring unit)

By pushing the arrows, you will select the measuring unit that you wish to use (Fahrenheit or Celsius). Thereafter, temperatures will be displayed according to your selection. After two minutes of inactivity on the keyboard, the display will shut itself off. The UNIT selection has no impact on the operation of the furnace. It is simply a preference chosen by the technician or the user of the product..

FAN (blower speed)

Using the arrows, increase or decrease the blower speed. You can choose from six preselected speeds. This selection is very important for the modes COOL, MANU, or CIRC. There is a choice of 6 different speeds. Under the COOL mode, the speed selected is the speed at which the distribution blower will work when a cooling demand will be sent by the thermostat. Under the MANU mode, it is the speed at which the distribution blower will work when a heating demand will be sent by the thermostat and that the hot air plenum will have reached its kick-in temperature (KIP). Under the CIRC mode, it is the speed at which the distribution blower will run to circulate the air inside the house during summer. The CIRC mode will also be used by the technician to manually select speed #4 in order to balance the system upon installation of the furnace.

Note: The FAN selection is not necessary under the HEAT mode because it is the PC board that automatically chooses the speed at which the distribution blower runs in order to maintain the BEP inside the hot air plenum.

LIGHTING

1. Open the furnace door

   Note: If there is already a bed of coals in the firebox, go to pre-heating.

2. Place one or two dry kindlings at the front of the furnace.
3. Place newspaper strips on top of the kindlings.
4. Cover the newspaper with more kindlings and small pieces of dry wood.

0044- Appendix D4 (page 24 of 48)

5. Add newspaper strips, then light the fire a low as possible and leave the door 1/2" (13 mm) opened. If you fail lighting the fire, you might experience a back draft through the air inlets.

PREHEATING

1. Once the kindling is well ignited or the coals revived, put 2 or 3 fire logs in such a way that the flames can interlace between the logs. Then, close the door. It is important to respect these loading sequences so that the wood will burn from the front to the back of the furnace.

2. Wait 15 to 20 minutes, then proceed with loading the furnace.

HEATING

1. When loading the furnace, lower the kindled pieces of wood and place them at the center of the combustion chamber before adding new logs.

2. Do not overload. Air must circulate freely in the upper part of the combustion chamber in order to obtain an efficient operation of the appliance (secondary burn). Please note that a small hot fire will produce much less residues than a large ,smouldering one.

IMPORTANT: DURING THE HEATING PROCESS, REMOVE THE ASHES AND WOOD THAT COULD OBSTRUCT THE 1/4" (6.4 mm) HOLE (PILOT) LOCATED BELOW THE DOOR, INSIDE THE FURNACE'S COMBUSTION CHAMBER.

PROCEDURE TO OPEN THE LOADING DOOR

TO MINIMIZE THE RISK OF SMOKE SPILLAGE, OPEN THE DOOR 1"
AND WAIT ABOUT 10 SECONDS BEFORE OPENING IT COMPLETELY.
THE PURPOSE IS TO STABILIZE THE PRESSURE INSIDE THE FURNACE.

EARLY SIGNS OF AN OVERFIRED FURNACE:

1. Roaring fire.

2. Chimney connector is glowing red.

3. Extreme heat coming from the furnace. If this occurs, **DO NOT OPEN THE DOOR**. Shut-off the air inlet opening completely, and wait until the glow has completely subsided.

ALWAYS KEEP THE DOOR AND THE ASH DRAWER CLOSED
(except for lighting and maintenance).

WOOD AS HEATING FUEL

0044- Appendix D4 (page 25 of 48)

We recommend that you burn dry hard wood only. There are two important factors to be considered when choosing a type of wood: the moisture content and the wood density. Hardwood, oak and beech for example, will provide better results because of the high density and minimal tar produced during combustion. It is highly recommended to use wood that has been dried for at least six months. **Do not use coal as heating fuel in this appliance.**

Whenever a high rate of smoke is noticed in the room, you must:

1. Open doors and windows.
2. Make sure the furnace door is closed as well as the damper (if necessary, lower the thermostat starting point or unhook the damper chain and close the barometric draft control manually).
3. When the furnace has cooled down, inspect the chimney to detect obstructions and consult a specialist to determine the cause of the smoke spillage.

PROLONGED POWER FAILURE

DURING PROLONGED POWER FAILURE, YOU CAN USE YOUR FURNACE. THE DAMPER REMAINS IN CLOSED POSITION AND THE FURNACE FUNCTIONS AT THE MINIMUM BURN RATE. IT IS VERY IMPORTANT YOU ENSURE THE HOLES (¼" DIAMETER) LOCATED UNDER THE LOADING DOOR INSIDE THE FURNACE'S COMBUSTION CHAMBER ARE FREE TO ENSURE A GOOD PERFORMANCE.

CARBON MONOXYDE IS A LETHAL GAS (ODOURLESS AND COLOURLESS), WHICH YOU MUST BEWARE OF.

CHIMNEY FIRES

This might occur when the fire gets extremely hot. Burning cardboard, branches, or small pieces of wood can ignite the creosote residue accumulated in the evacuation flue system. The usual signs are:

1. Rumbling.
2. The flue gets extremely hot (red).
3. Flames or sparks are coming out of the chimney.

In case of a chimney fire, call your local fire department immediately and sprinkle the roof around the chimney with water.

Make sure that the furnace door is closed as well as the damper (if necessary, lower the thermostat starting point or release the chain from the damper and close the barometric draft control manually).

If the fire gets uncontrollable due to an improper use or because the draft is too strong, follow the same procedure as in a chimney fire except that you will have to **OPEN** the barometric draft control manually.

LOCAL FIRE DEPARTMENT

Phone number: _____

0044- Appendix D4 (page 26 of 48)

5. MAINTENANCE

MAINTENANCE OF THE EXCHANGERS

The flue pipe and the exchangers should be inspected regularly during the burning season. Easy access is provided (without the use of tools): simply unscrew the wing nut on the exchangers access door. See pictures below.

WARNING : THE CLEANING OF THE HEAT EXCHANGERS, OF THE FLUE PIPE, THE CHIMNEY, AND THE EXHAUST BLOWER (IF APPLICABLE), IF NECESSARY, IS PARTICULARLY IMPORTANT AT THE END OF THE WINTER SEASON IN ORDER TO REDUCE CORROSION DURING THE SUMMER MONTHS, CAUSED BY ACCUMULATION OF ASHES.

Before cleaning the three exchanger pipes, move the upper vermiculite baffle board of the combustion chamber forward (see drawing on next page). Using the scraper, clean the three exchanger pipes. The accumulated dirt in the lateral exchangers will fall into the combustion chamber; the dirt in the central exchanger will have to be removed from the front or the back of the furnace. Then, ensure that the upper baffle board is free of ashes. **Do not forget to push the upper baffle board back to it's original position.** Finally, close the exchanger access door.

MAX CADDY SECTION VIEW

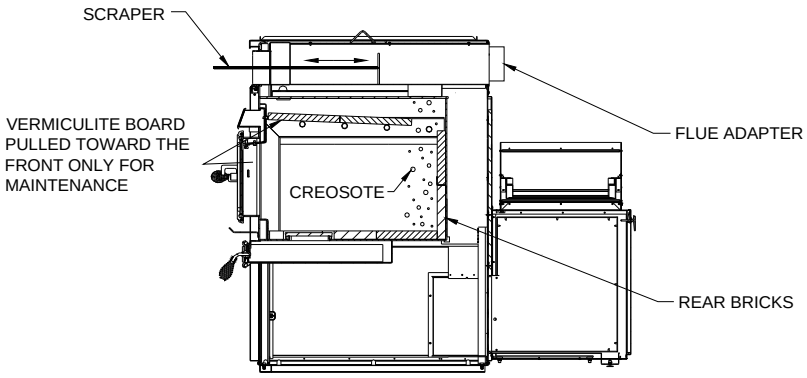

0044- Appendix D4 (page 27 of 48)

CHIMNEY MAINTENANCE

The most efficient method to sweep the chimney is using a hard brush. Brush downwards so soot and creosote residues will come off the inner surface and fall at the bottom of the chimney where they can be removed easily.

The chimney must be checked regularly and if creosote has accumulated, it must be removed without delay.

Smoke flue inspection

- The smoke flue (connector) should be inspected regularly during the heating season.
- If possible, the smoke flue should be dismantled and cleaned.
- The flue should be inspected for possible damage.
- If it is in good condition, put the flue back in place; otherwise, it must be replaced.
- REGULARLY, EXAMINE THE FLUE PIPES, THE JOINTS, AND THE SEALING TRIMS TO ENSURE THAT THE SMOKE AND THE COMBUSTION GASES ARE NOT TRANSPORTED INTO THE AIR DUCTING SYSTEM.
- Use only wood as a combustible.
- Seasoned hard wood logs 18” to 22” long are recommended as combustible.

MAINTENANCE OF THE BLOWER MOTOR

The two motor bearings must be lubricated once a year using non detergent SAE 20 oil (Marathon motor only).

DO NOT OVERLUBRICATE

FILTERS

The furnace must not be operated without filters. In order to efficiently and safely operate a slow combustion heating system , you have to ensure a regular maintenance. This means that the chimney, the joints and the flue must be kept in good condition and the air filters must be replaced regularly; use the same size and same type as the original filters. High efficiency 2-ply, 3-ply, or 4-ply filters are recommended.

Filters dimensions

Max Caddy: 16” x 20” filters

DOOR GASKET MAINTENANCE

It is important to maintain the door gasket in good condition. After a while, the gasket might sag; a door adjustment may then be required. If the door adjustment is not sufficient, replace the door gasket with a genuine one.

0044- Appendix D4 (page 28 of 48)

Door adjustment procedure:

1. Unscrew completely the locking pin (see picture below).

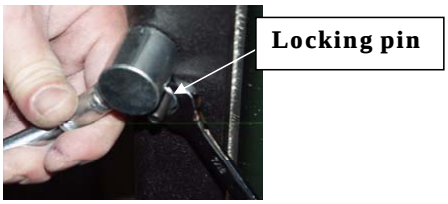

2. To increase the pressure of the door on the gasket, turn the handle counter clockwise; to decrease the pressure of the door on the gasket, turn the handle clockwise until desired pressure is attained.

3. Then, screw back the locking pin about 1/4" deep and make sure you lock it in place with the nut.

6. REPLACEMENT PARTS

Your PSG furnace is designed to burn clean and requires little maintenance. It is recommended to conduct a visual inspection at least once a month to uncover any damage to the unit. Any defect must be repaired without delay using genuine PSG replacement parts. You can find a complete list of replacement parts in our website at www.psg-distribution.com.

DOOR GLASS

- Inspect the glass regularly to detect any glass failure. If you find any defect, stop using the wood furnace immediately. Never operate a wood furnace with a broken glass.
- If you have to change your door glass, you must use Pyroceram 3/16" (5mm) thick. Use genuine parts sold by a PSG authorized dealer.
- To replace the glass, remove the screws that hold the glass retainers in place. Removed these retainers and replace the defective glass; the glass gasket should be replace at the same time. To put back in place, reverse the procedure.
- Do not use abrasive cleanser. Special cleansers for wood fireplaces glass are available in any good hardware store or specialty hearth retailer.
- Clean glass **ONLY** when the unit has cooled down.

GASKET

We recommend to replace gasket that seals the door once a year, in order to maintain a good control of the combustion for maximum efficiency and security. To replace your door gasket, remove the old gasket and adhesive. Clean the surface thoroughly, apply a high-temp adhesive/silicone (650°F) sold for that particular use, and put the new gasket onto the door. Wait for at least 4 hours before lighting your furnace.

0044- Appendix D4 (page 29 of 48)

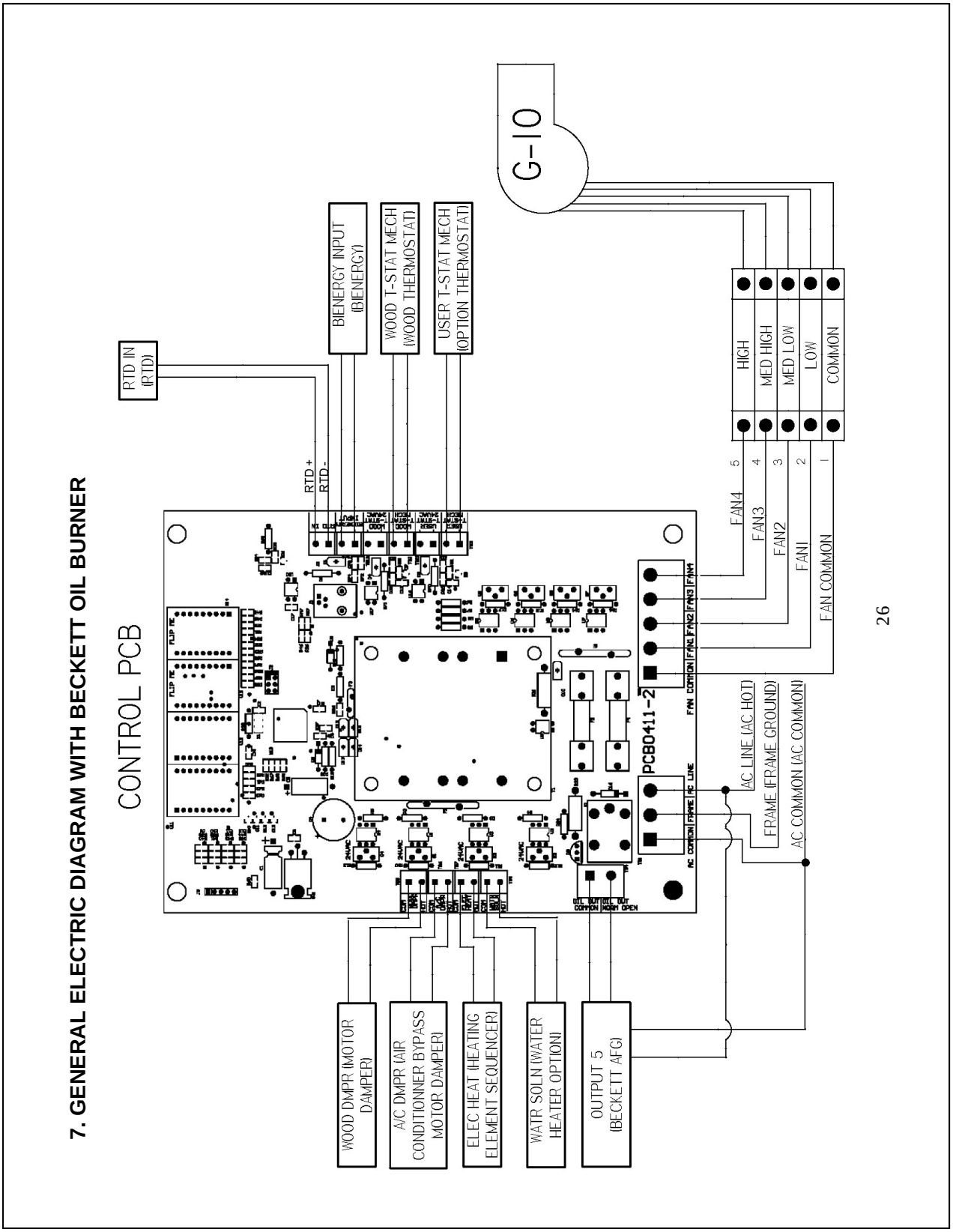

0044- Appendix D4 (page 30 of 48)

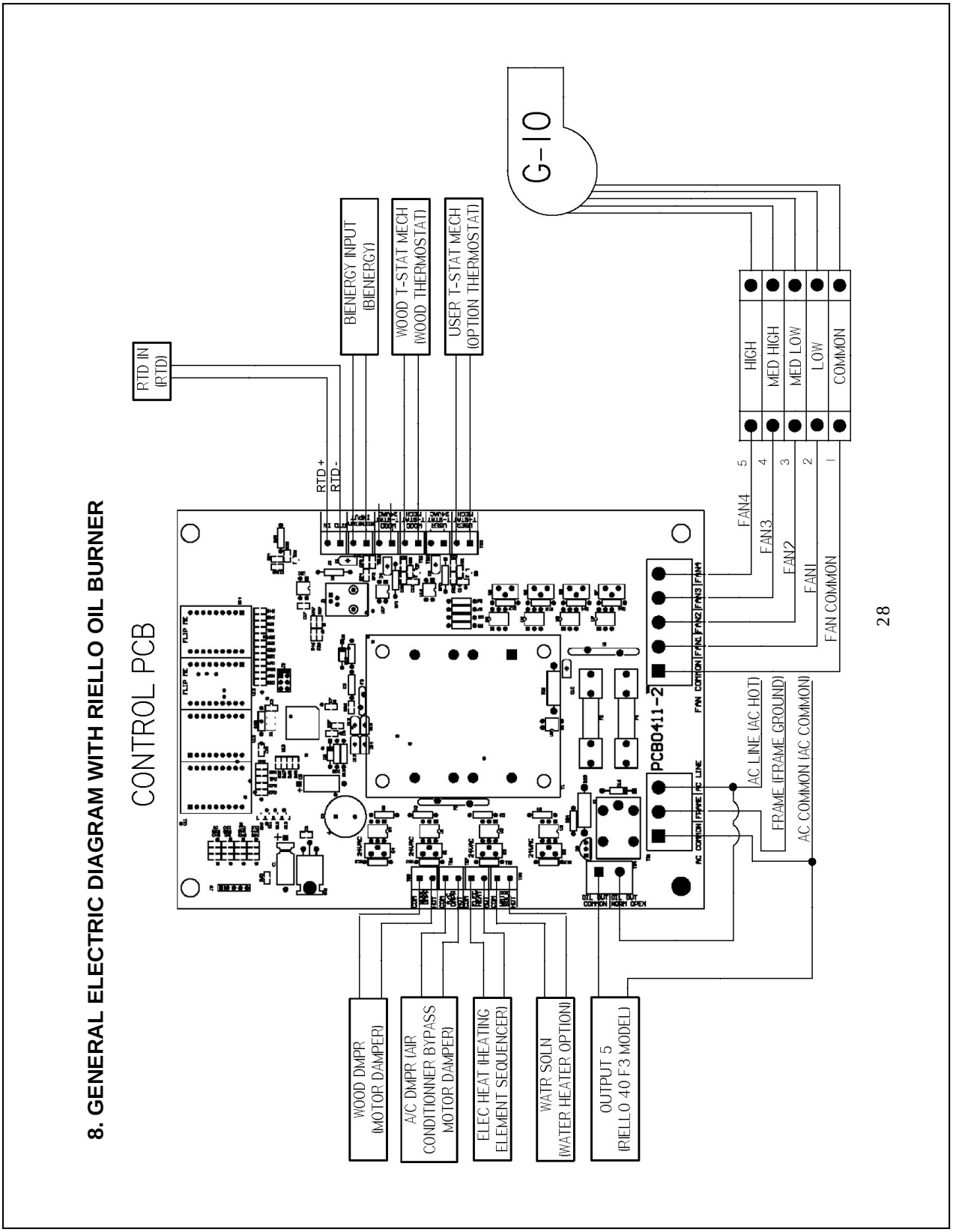

0044- Appendix D4 (page 31 of 48)

9. ELECTRIC DIAGRAM WITH OPTIONAL ELECTRICAL ELEMENT

MAX CADDY WOOD/ELECTRIC COMBINATION FURNACE

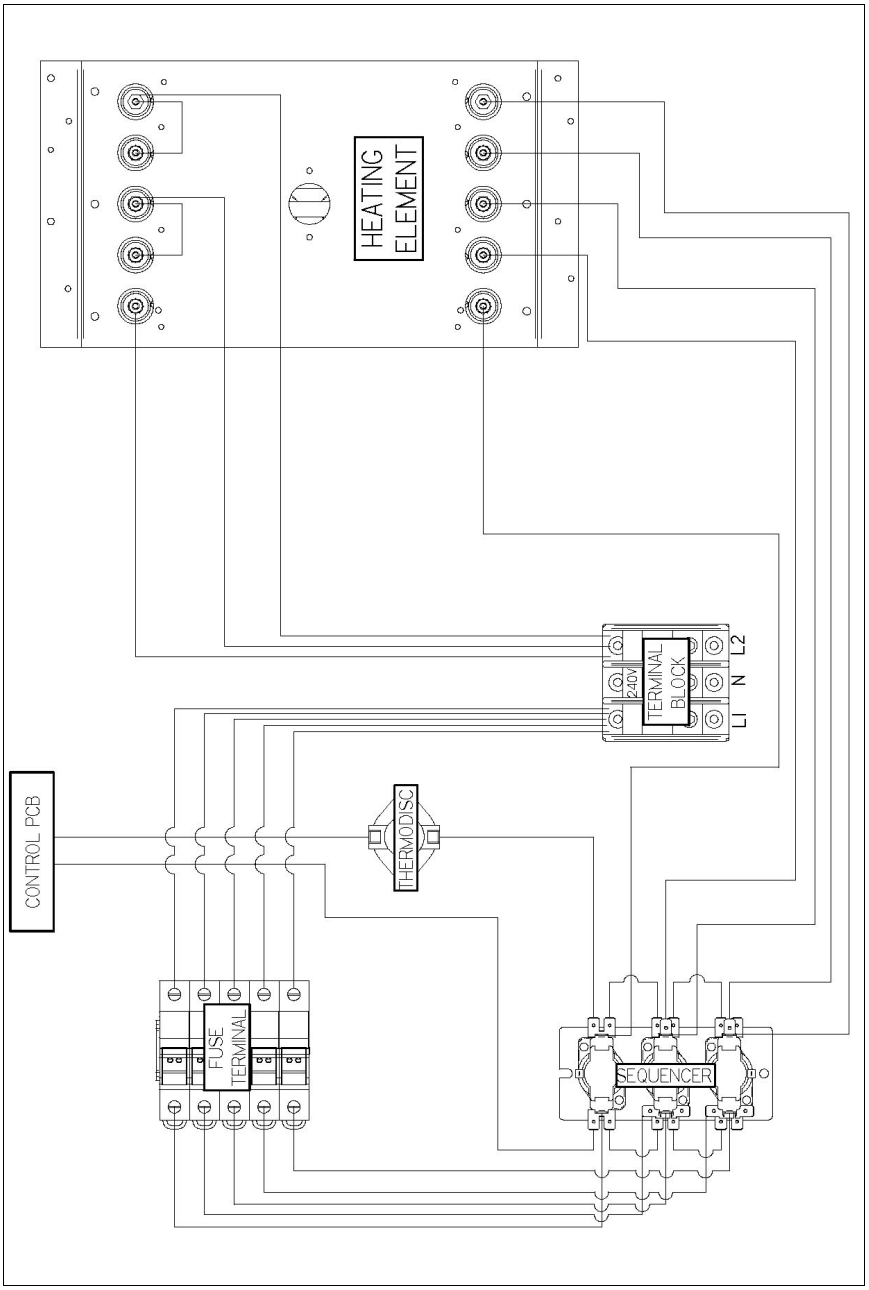

29

0044- Appendix D4 (page 32 of 48)

10. MAX CADDY TECHNICAL DATA

	MAX CADDY
A	57”
B	29 ¾”
C	48 ¾”
D	18 X 20”
E	32 ¼”
F	25 ½”
G	45”
FLUE PIPE	6” or 7”*
WEIGHT	650 lbs

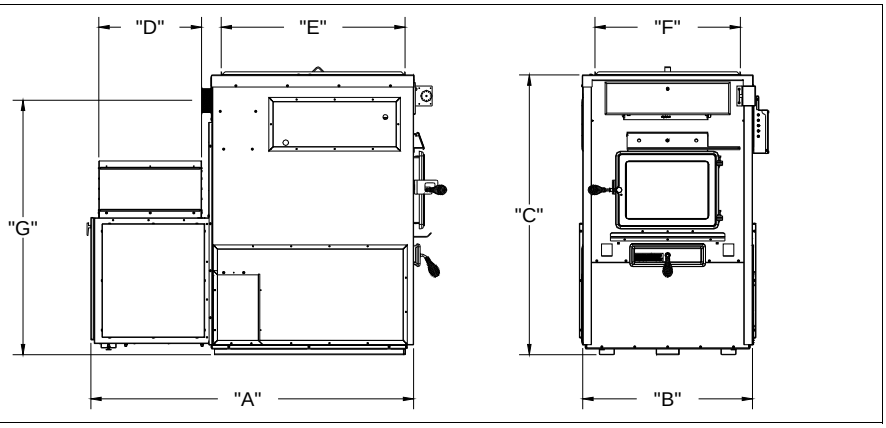

* Reducer required

GENERAL TECHNICAL DATA

MODEL	DIRECT DRIVE			THEORETICAL FLOW	TEMP VAR.	BTU INPUT	STATIC PRESSURE		FILTER
	FAN	MOTOR	SPEED	(CFM)	(°F)	(WOOD)	MIN.	MAX.	(1)
							IN.W.C.		
MAX CADDY	G-10	1/2HP	4	1780	100	180,000	0,2	0,5	16” x 20” X 1”

TECHNICAL DATA – ELECTRICAL ELEMENT

MODEL	OUTPUT (CFM)	TEMP. VAR. (°F)	BTU/HR	AMPS TOTAL	BREAKER REQUIRED	FEEDER GAUGE	VOLTAGE SINGLE PHASE	ELEMENTS QTY
20 kW	1800	75	68,240	85	125 amps	3	120/240	4 x 5 kW
25 kW	1800	85	85,325	100	150 amps	2	120/240	5 x 5 kW
WOOD	1800	100	180,000	5	15 amps	14	120	N/A

0044- Appendix D4 (page 33 of 48)

11. MAX CADDY BRICKS LAYOUT

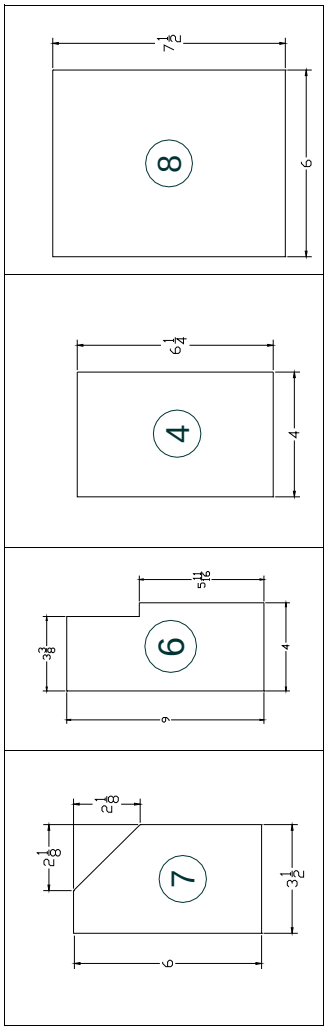

Item	DESCRIPTION	QTY
1	BRICK 6 X 8	4
2	ASH GRATE	1
3	BRICK 4 X 8	22
4	BRICK 4 X 8 (CUT)	3
5	BRICK 4 X 9	7
6	BRICK 4 X 9 (SPECIAL)	2
7	BRICK 4 X 8 (SPECIAL)	2
8	BRICK 6 X 8 (CUT)	2

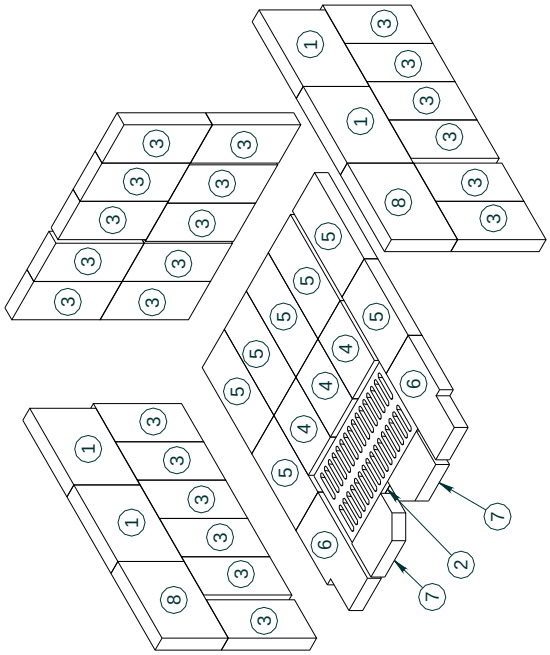

31

0044- Appendix D4 (page 34 of 48)

12. TROUBLE SHOOTING

PROBLEM	CAUSES	SOLUTIONS
Heating inefficient during the first combustions. Lack of draft.	Improper adjustment of the barometric damper (opened too wide). Chimney flue restriction (too long, 90° elbows)	Adjust the damper, minimize the chimney length and use 45° elbows.
Furnace heats well, warm air plenum is very hot but there is not much heat coming out in the room.	Improper installation of the ducts, unbalanced system (too many warm air outlets and not enough cold air inlets).	Reinstall the ducts correctly. Respect the minimum static pressure of 0.20 IN.W.C.
Furnace consumes a lot of wood.	The thermostat which controls the damper is continuously activated and is too close to a source of cold air. Damper not properly adjusted. House not insulated enough. Ash drawer is not tightly closed. Furnace too small for the surface to be heated. Unbalanced ventilation system, very little heat where the thermostat is located.	Relocate the thermostat. Adjust the chain that links the damper to the servo-motor. Rebalance the ventilation system in order to increase the air flow in the room where the thermostat is located.
Fan start-up is too slow.	Fan “ON” setting too high. Return air is too cold (temperature lower than 65 degrees). RTD not well located in the warm air plenum.	Lower the temperature starting point. Usually, start-up temperature can be adjusted on the PC board between 125 and 150 degrees F. Reduce the fresh air flow.
A lot of creosote, moderate heat output.	Wet wood, lack of draft. Barometric damper not properly adjusted. Soot-up chimney.	Use dry wood. Adjust the barometric damper. Clean the chimney flue and the furnace exchangers.
Furnace heats a lot but the warm air plenum does not get hot.	Wet wood or low grade wood. Too much cold air return for the hot air ducts. Unbalanced ventilation system.	Use dry wood. Reinstall the ventilation system correctly.

IMPORTANT NOTE

FOR THE INSTALLATION OF A CENTRAL HEATING SYSTEM, IT IS HIGHLY RECOMMENDED TO CONSULT A HEATING SYSTEM VENTILATION SPECIALIST.

0044- Appendix D4 (page 35 of 48)

SECTION B

WOOD/OIL COMBINATION FURNACE

INSTALLATION AND OPERATION INSTRUCTIONS FOR UH-MAX CADDY WOOD/OIL COMBINATION FURNACE

READ THIS MANUAL THOROUGHLY BEFORE OPERATING THE FURNACE

CAUTION	CAUTION
EXPLOSION OR FIRE HAZARD. FOR YOUR SAFETY: DO NOT STORE OR USE GASOLINE OR ANY FLAMMABLE LIQUIDS OR VAPORS IN THE VICINITY OF THIS HEATING UNIT.	DO NOT ATTEMPT TO LIGHT THE BURNER WHEN EXCESS OIL HAS ACCUMULATED, WHEN THE APPLIANCE IS FULL OF VAPOR, OR WHEN THE COMBUSTION CHAMBER IS VERY HOT.

DO NOT BURN WASTE OR PAPER IN THE APPLIANCE.
DO NOT LEAVE PAPER OR ANY COMBUSTIBLE MATERIAL AROUND THE APPLIANCE.

DO NOT TRY TO MODIFY THE UNIT OR ITS COMMANDS – CALL A TECHNICIAN

PLEASE SAVE THIS DOCUMENT!

0044- Appendix D4 (page 36 of 48)

GENERAL NOTES

This instructions manual treats mainly of the oil burning unit of your wood/oil combination furnace.

For any additional information concerning this wood burning furnace, please consult Section A of this manual.

To obtain the maximum efficiency out of your furnace, follow the advice below regarding the installation and operation of your WOOD/OIL combination furnace.

- Respect the local codes (when in doubt, consult your local dealer).
- Respect the clearances indicated on this instructions manual and make sure that they match those indicated on the appliance's certification label;
- Make sure that your furnace is installed in conformity with the instructions on the certification label;
- All the controls adjustments must be performed by a qualified technician.

THE INSTALLATION OF THE WOOD/OIL COMBINATION FURNACE MUST BE DONE IN ACCORDANCE WITH THE RULES OF THE AUTHORITIES HAVING JURISDICTION AND FOR CANADA, THE CAN/CSA B-139 STANDARD FOR OIL BURNING HEATING APPLIANCES.

This oil burning furnace is not approved for use with combustible heavier than No.2 oil (furnace oil). **DO NOT USE GASOLINE, TRANSMISSION OIL, OR OTHER TYPE OF OIL CONTAINING GASOLINE.**

1. DRAFT AND CHIMNEY

The chimney must be conform to the rules of the authorities having jurisdiction and the CAN/CSA B139 & NFPA 31 standard regarding installation of oil burning heating appliances. The installation of the connecting pipes to the oil unit must be done and approved by a professional.

The barometric damper provided with the appliance must be properly installed on the flue pipe of the oil unit. The purpose of the damper is to limit the draft, if necessary, in the oil unit evacuation pipe.

Since the evacuation pipe of the oil unit is connected to the evacuation pipe of the wood burning furnace, **the minimum draft to be respected at all times in the evacuation pipe of the wood burning side is -0.04 IN.W.C.**

2. OIL TANK AND PIPING

The maximum capacity of the tank must not exceed 200 imperial gallons and the tank must be located at least 7 feet from the burner. Local codes will govern the size of the air inlets and filling openings as well as the type of plugs to be used. 1 1/4" IPS and 2" IPS are usually accepted as minimum dimensions for the air intake pipes and fill pipes, respectively. The oil line to the burner must be a 3/8" outside diameter copper tubing for runs up to 50 feet and ½" o.d. for longer runs. A manual shut-off valve and an oil filter shall follow in sequence on the oil line between the oil tank and the burner. The oil line must be buried or protected adequately to avoid any damage.

BURNER PUMP

The oil burner is easy to install. Use the three screws and nuts to fix the burner on the combustion chamber.

The burner is equipped with a single stage pump. When the pump is connected to a single feeder pipe, a maximum rise of 8 feet is allowed. This height is measured from the tank outlet level to the burner inlet.

When the rise is more than 8 feet and not exceeding 10 feet, a by-pass plug (provided with the burner) must be inserted in the pump and an oil return pipe must be installed. ***For more details, see "INSTALLATION INFORMATIONS", Part No. 21844 on the burner pump.***

0044- Appendix D4 (page 37 of 48)

If the rise is higher than 10 feet, a two stage pump may be required along with an oil return pipe.

3. APPLIANCE INSTALLATION

LOCATING THE UNIT

Consult Section A of this manual for more details.

N.B. This appliance must be installed in conformity with the instructions on the certification label.

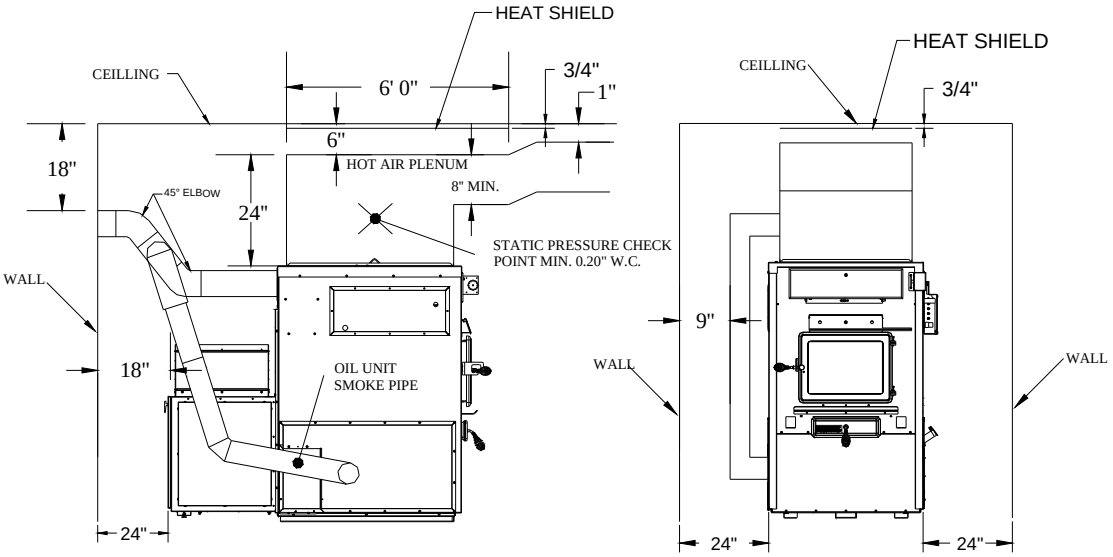

N.B. FOR THE AIR RETURN, RESPECT THE OPENING SURFACE OF THE COLD AIR PLENUM OF THE FURNACE.

POSITIONING THE APPLIANCE

For a safe and quiet operation, the furnace must be levelled in both directions. Give each “U” shape track an equal support so that the weight is evenly distributed.

0044- Appendix D4 (page 38 of 48)

PIPE CONNECTOR AND DAMPER

The pipe connecting the furnace to the chimney must be as short as possible. If a deviation is required, the use of 45° elbows is highly recommended for a better evacuation of the smoke in the chimney of the wood burning furnace. The barometric damper provided with the appliance must be installed on the oil unit evacuation pipe, approximately 24" from the flue outlet of the unit.

TYPE OF FURNACE	(UH) OIL BURNING UNIT FLUE PIPE DIAMETER
PSG/ UH-MAX CADDY	5”

0044- Appendix D4 (page 39 of 48)

POSSIBLE INSTALLATIONS OF THE WOOD/OIL MAX CADDY

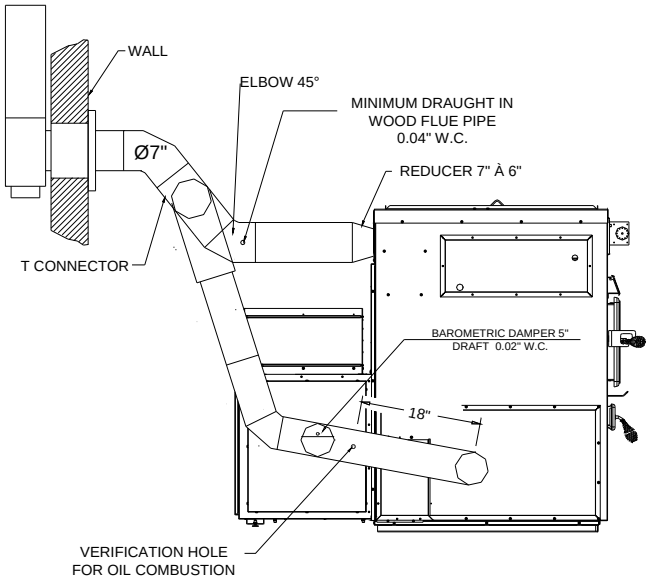

FURNACE TYPE	CHIMNEY PIPE DIAMETER
MAX CADDY	*7"

*REQUIRE A FLUE PIPE REDUCER

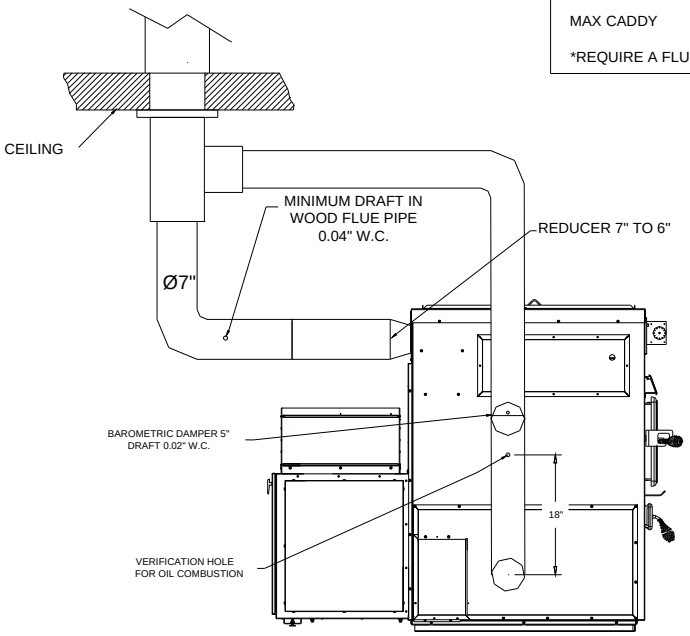

37

0044- Appendix D4 (page 40 of 48)

COMBUSTION AIR

Consult Section A of this manual for more details.

ELECTRICAL WIRING

The whole wiring from the distribution panel to the heating unit shall comply with the applicable electrical standards and local codes. The unit should be connected to its own 15 amp/120VAC electric circuit. Consult section A of this manual for the electrical wiring diagram using a Beckett or Riello burner.

THERMOSTAT

Both the wood and oil thermostats must be installed side by side on an interior wall, in a location where they are not affected by the air draft coming from the furnace's blower; they must be level and at least 55 inches above the floor. Consult section A of this manual for more details regarding the thermostats.

FAN CONTROL

In the case of the oil option, the blower starts once the request for heat is activated by the oil option's thermostat.

The adjustment of all controls must be performed by a qualified technician. For continuous operation of the blower during Summer, the mode must be changed to CIRC on the PC board. Then, the appropriate blower speed must be selected.

It is not recommended to let the blower run on continuous mode when heating with wood since the wood furnace must reach a certain temperature before the blower starts in order to operate efficiently.

COMBUSTION SAFETY CONTROL

The AFG type oil burner is equipped with an electronic control (# R7184B1032) including a pre-purge function and a new, more durable drive motor.

PRE-PURGE

When there is a call for heat, the burner's fan will run for 15 seconds before the actual ignition takes place to vent the combustion chamber and generate a proper draft. This will result in a smoother ignition of the oil burner.

SAFE OPERATION

If the flame goes out while the burner is running, the CAD cell will detect it; the control will then switch to the "RECYCLE" mode and cut the fuel supply to the burner for 60 seconds. After this delay, the control goes back to "IGNITION" mode. If the flame goes out 3 times in a row, the control will switch to the "LOCKOUT" mode to prevent a continuous cycling of the ignition process, which would cause a premature soot-up of the combustion chamber and smoke pipe. To deactivate the "LOCKOUT" mode, press and hold the reset button of the control for 30 seconds.

A green diagnostic LED on the control has four states:

- On = Flame present
- Off = No flame
- 2 seconds On, 2 seconds Off = "Recycle" mode
- 1/2 second On, 1/2 second Off = "Lockout" mode TEMPORARY SHUT-OFF

By pressing and holding the reset button, the burner will shut-off until the reset button is released. When the button is released, the control will start over at the beginning of the normal cycle.

0044- Appendix D4 (page 41 of 48)

FOR ADDITIONAL INFORMATIONS ON OPERATION SEQUENCES OF THE BURNER, CONSULT THE BURNER INSTRUCTION MANUAL.

COMBUSTION ADJUSTMENT AND VERIFICATION

To enjoy the efficiency of our oil burning units, you must respect the following criterion: oil burning units must be connected to flue pipes having at all times a sufficient draft to ensure an efficient and safe operation of unit.

TOOLS REQUIRED:

- DRAFT GAUGE
- SMOKE TESTER
- PUMP PRESSURE GAUGE
- NOZZLE AND ELECTRODES POSITION TESTER
- COMBUSTION TESTER

CHECK LIST:

- SELECTION OF NOZZLE AND HEAD
- NOZZLE / ELECTRODES POSITION IN RELATION TO THE HEAD
- PUMP PRESSURE
- OIL LINE IS BLEED.
- FAN SPEED
- BAROMETRIC DAMPER POSITION

COMBUSTION VERIFICATION PROCEDURE:

A- DRILL A 9/32" DIAMETER HOLE IN THE EVACUATION PIPE APPROXIMATELY 18" FROM THE OUTLET.

B- CLOSE THE DOOR AND THE AIR INTAKE(S) OF THE WOOD BURNING FURNACE.

C- LIGHT THE BURNER FOR AT LEAST 10 TO 15 MINUTES.

D- OVER THE FIRE DRAFT = 0.01 TO 0.02 IN.W.C. (THE DRAFT OVER THE FIRE MUST BE MEASURED IN THE OPENING OF VISION TUBE'S PULSATION TRAP).

E- SMOKE TEST BETWEEN 0 AND 1 ON THE SHELL BACHARACH SCALE (TRACES).

F- DRAFT IN THE CHIMNEY = 0.02 IN.W.C.

G- PERCENTAGE OF EXCESS AIR = 20 TO 40%, 12% CO2, 5% O_2.

H- AVERAGE EFFICIENCY OF 83% TO 87% BASED ON THE TYPE OF BURNER AND ITS INPUT.

I- TIGHTEN ALL THE LOCKING SCREWS AFTER COMPLETING THE FINAL ADJUSTMENT.

N.B. The barometric damper provided with the appliance must be properly installed on the flue pipe of the oil burning unit. The purpose of the damper is to adjust the draft in the evacuation pipe of the oil burning unit to the recommended level. Since the evacuation pipe of the oil burning unit is connected on the evacuation pipe of the wood burning furnace, the minimum draft to be respected is 0.04 IN.W.C. in the evacuation pipe of the wood burning side, at all times. ***In fact, a barometric damper that would be opened too wide could cause an important loss of draft in the evacuation pipe of the wood burning furnace.***

0044- Appendix D4 (page 42 of 48)

ELECTRODES SETTING

The electrodes must be adjusted by a qualified technician. A proper positioning of the electrodes is important to get an efficient lighting of the oil.

ELECTRODE SETTING FOR "F" HEAD

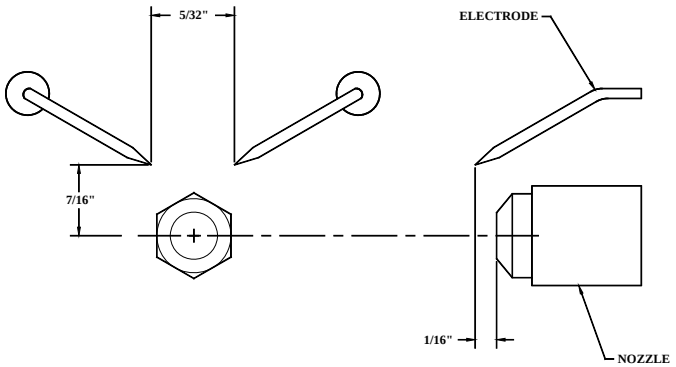

WARNING:

1. REFER TO THE RATING PLATE FOR THE PUMP PRESSURE AND THE NOZZLE TYPE.
2. REFER TO THE OIL BURNER'S INSTRUCTIONS MANUAL FOR DETAILS ON THE PUMP.
3. FOR ELECTRODES SETTING, SEE THE OIL BURNER'S MANUAL.
4. FOR THE START-UP AND ADJUSTMENT OF THE BURNER, SEE THE INSTRUCTIONS MANUAL OF THE BURNER.
5. IN CASE OF BURNER FAILURE, REFER TO THE BURNER MANUAL.

4- APPLIANCE START-UP

The start-up must be performed by a qualified technician. Make sure the installation is completed and the oil tank has been filled up. The oil line must also have been purged.

CAUTION: CLOSE THE BLOWER COMPARTMENT ACCESS PANEL BEFORE STARTING THE BURNER.

5- PROLONGED CLOSING

A) Cut off the electric circuit
B) Close the oil shut-off valve

0044- Appendix D4 (page 43 of 48)

NOTE: THE SHUT-OFF VALVE MUST BE CLOSED WHEN THE APPLIANCE IS OUT OF SERVICE FOR A PROLONGED PERIOD OF TIME.

6- MAINTENANCE

At the beginning of heating season, have the complete installation inspected by a qualified service man, especially the lighting system and the controls.

NOTE: THE UNIT'S MAINTENANCE, REPAIRS AND THE CLEANING OF THE OIL FILTER MUST BE DONE BY A QUALIFIED TECHNICIAN.

SERVICE

Before calling for service, first check the following:

- Fuel supply
- Electric fuses or breakers
- Thermostat setting
- PC board settings
- The state of the green diagnostic LED on the burner control.

MAINTENANCE

WARNING: *Turn off electric power supply before servicing the unit.*

1. The furnace, the burner and the flue pipe should be cleaned at least once a year.
2. The nozzle should be inspected and replaced if needed. Handle with care to avoid damaging its surface.
3. The electrodes should be adjusted as indicated in the burner manual.
4. Lubricate the burner motor bearings twice a year. (2 or 3 drops of SAE 20 non detergent lubricating oil).
5. The oil filter should be verified annually and replaced if needed.

Burner no.: _____ Model: _____ Date of installation: _____

Service telephone no.: Day: _____ Night: _____

Dealer's name and address: _____

TEST REPORT :

CO_2 _____% Temp. at stack: _____ Draft at stack: _____IN.W.C.

Nozzle output: _____GPH Smoke colour: _____

Inspected by : _____

0044- Appendix D4 (page 44 of 48)

FILTERS

The furnace should never be operated without filters.

This applies especially to temporary heating during construction period. Operating the furnace without filters would allow dust and other particles in the air to circulate freely and to penetrate into the fan and motor carters, causing some defects. Clean and replace filters as often as required.

Note : The operation cost is higher when using a dirty filter.

7- ELECTRICAL DIAGRAMS

Refer to SECTION A of this manual.

0044- Appendix D4 (page 45 of 48)

NOTES:

0044- Appendix D4 (page 46 of 48)

0044- Appendix D4 (page 47 of 48)

8- TECHNICAL DATA

UH – MAX CADDY

MODEL	BURNER TYPE	BTU INPUT	NOZZLE	FLOW	HEAD	STATIC PLATE	PRESSURE AT THE PUMP	H.P. FAN MOTOR	TUBULATOR ADJUSTMENT	AIR ADJUSTMENT	EFFICIENCY
UH–MAX CADDY	BECKETT AFG	91,000	0.65, 70^0W (DELAVAN)	0.65 GAL US/H (2.46 L-H)	F0	---	100 PSI (690 kPa)	½	---	0/7	85%
UH–MAX CADDY	BECKETT AFG	120,000	0.65, 70^0W (DELAVAN)	0.86 GAL US/H (3.26 L-H)	F0	---	175 PSI (1205 kPa)	½	---	1/6	83%
UH–MAX CADDY	RIELLO 40 F3	91,000	0.50, 70^0W (DELAVAN)	0.60 GAL US/H (2.27 L-H)	---	---	150 PSI (1035 kPa)	½	1	2.5	87%
UH–MAX CADDY	RIELLO 40 F3	120,000	0.65, 70^0W (DELAVAN)	0.84 GAL US/H (3.18 L-H)	---	---	165 PSI (1135 kPa)	½	1	2.5	85%

For any additional information, consult the rating plate on the left hand side of the appliance.

0044- Appendix D4 (page 48 of 48)

LIMITED LIFETIME WARRANTY

The warranty of the manufacturer extends only to the original consumer purchaser and is not transferable. This warranty covers brand new products only, which have not been altered, modified nor repaired since shipment from factory. Proof of purchase (dated bill of sale), model name and serial number must be supplied when making any warranty claim to your PSG dealer.

This warranty applies to normal residential use only. Damages caused by misuse, abuse, improper installation, lack of maintenance, over firing, negligence, accident during transportation, power failures, downdrafts, or venting problems are not covered by this warranty.

This warranty does not cover any scratch, corrosion, warping, or discoloration caused by over firing, abrasives or chemical cleaners. Any defect or damage caused by the use of unauthorized parts or others than original parts void this warranty. An authorized qualified technician must perform the installation in accordance with the instructions supplied with this product and all local and national building codes. Any service call related to an improper installation is not covered by this warranty.

The manufacturer may require that defective products be returned or that digital pictures be provided to support the claim. Returned products are to be shipped prepaid to the manufacturer for investigation. If a product is found to be defective, the manufacturer will repair or replace such defect. Transportation fees to ship the product back to the purchaser will be paid by the manufacturer. Repair work covered by the warranty, executed at the purchaser's domicile by an authorized qualified technician requires the prior approval of the manufacturer. Labour cost and repair work to the account of the manufacturer are based on predetermined rate schedule and must not exceed the wholesale price of the replacement part. All parts and labour costs covered by this warranty are limited according to the table below.

The manufacturer at its discretion may decide to repair or replace any part or unit after inspection and investigation of the defect. The manufacturer may, at its discretion, fully discharge all obligations with respect to this warranty by refunding the wholesale price of any warranted but defective parts. The manufacturer shall in no event be responsible for any special, indirect, consequential damages of any nature, which are in excess of the original purchase price of the product. A one-time replacement limit applies to all parts benefiting from a lifetime coverage. This warranty applies to products purchased after March 1st , 2009.

DESCRIPTION	WARRANTY APPLICATION	
	PARTS	LABOUR
Castings, combustion chamber (welds only), castings, and heat exchanger (welds only).	Lifetime	3 years
Stainless steel firebox components, secondary air tubes*, surrounds and heat shields, ash drawer, and plating* (defective manufacture).	5 years	3 years
Carbon steel firebox components, glass retainers, handle assembly, C-Cast baffle*, and vermiculite baffle*.	3 years	1 year
Oil burner, electrical elements, blowers, heat sensors, switches, rheostat, relays, damper motor, fan limit control, PC board, wiring, and other controls.	2 years	1 year
Ceramic glass (thermal breakage only*), paint (peeling), gaskets, insulation, and ceramic fibre blankets.	1 year	n/a
Firebrick	n/a	n/a

**Pictures required*

Shall your unit or a components be defective, contact immediately your **PSG** dealer. Prior to your call make sure you have the following information necessary to your warranty claim treatment:

- Your name, address and telephone number;
- Bill of sale and dealer's name;
- Serial number and model name as indicated on the nameplate fixed to the back of your unit;
- Nature of the defect and any relevant information.

Before shipping your unit or defective component to our plant, you must obtain from your PSG dealer an Authorization Number. Any merchandise shipped to our plant without authorization will be refused automatically and returned to sender.

0045- Appendix D5

Unit Owner's Manual

Max Caddy-2016

Appendix D-5

0045- Appendix D5 (page 2 of 80)

Caddy By PSG

Installation and operating instructions for the MAX CADDY WOOD FURNACE (PF01102 model)

Certified according to CSA B415.1-10, CSA B366.1, UL391,
CSA C22.2 NO.236, UL 1995, CAN/CSA B140.4 and UL 727

FURNACE MODELS INCLUDED IN THIS MANUAL

WOOD ONLY

COMBINATION
20 kW / 25 kW AND OIL

Read these instructions carefully before installing and operating your furnace.

CONGRATULATIONS!

You have purchased one of the finest wood or combination furnaces available on the market. We are confident that your furnace will provide years of comfort and safe operation.

Please keep this document!

Verified and tested for Canada and the United States by an accredited laboratory.

This manual is available for free download on the manufacturer's web site. It is a copyrighted document. Re-sale is strictly prohibited. The manufacturer may update this manual from time to time and cannot be responsible for problems, injuries, or damages arising out of the use of information contained in any manual obtained from unauthorized sources.

Eco-energy at the hearth of your home

PSG
250, de Copenhague,
St-Augustin-de-Desmaures (Quebec)
CANADA G3A 2H3

Printed in Canada

45833A
22-04-2016

0045- Appendix D5 (page 3 of 80)

TABLE OF CONTENT

1. INTRODUCTION ... 5
2. APPLIANCE PERFORMANCE[1] ... 6
3. GENERAL FEATURES ... 7
4. SPECIFICATIONS ... 8
5. MAX CADDY FURNACE TECHNICAL DATA ... 9
6. FURNACE DIMENSIONS ... 9
7. CHIMNEY AND DRAFT ... 11
8. SAFETY RULES ... 11
8.1. GENERAL REQUIREMENTS ... 11
8.2. ODOUR FROM THE PAINT ... 11
8.3. ASH DISPOSAL ... 11
8.4. CREOSOTE BUILD-UP AND REMOVAL ... 11
8.5. SMOKE DETECTOR ... 12
8.6. DOOR GLASS ... 12
8.6.1. GLASS SPECIFICATIONS ... 12
8.7. ASH DRAWER ... 12
8.8. ASH GRATE ... 12
MAX CADDY WOOD ONLY FURNACE, COMBINED WOOD / ELECTRIC OR PARALLEL ADD-ON PF01102 ... 13
9. INSTALLATION INSTRUCTIONS ... 14
9.1. BLOWER INSTALLATION ... 14
9.2. LINK BOARD INSTALLATION AND CONNECTION ... 14
9.3. TOUCHSCREEN INSTALLATION AND CONNECTION ... 18
9.4. HOT AIR PLENUM TEMPERATURE PROBE INSTALLATION AND CONNECTION (RTD) ... 19
9.5. SERVOMOTOR INSTALLATION AND CONNECTION ... 20
9.6. UNIT LOCATION ... 21
9.7. MINIMUM CLEARANCES TO COMBUSTIBLE MATERIALS AND FLOOR PROTECTION ... 21
9.7.1. MINIMUM CLEARANCES TO COMBUSTIBLE MATERIALS ... 22
9.7.2. MINIMUM CLEARANCES TO COMBUSTIBLES MATERIALS FOR AIR RETURN DUCT ... 23
9.7.3. MINIMUM CLEARANCES TO COMBUSTIBLES MATERIALS FOR HOT AIR PLENUM ... 23
9.7.4. FLOOR PROTECTION ... 23
9.8. FLUE AND BAROMETRIC DRAFT CONTROL CONNECTION ... 24
9.9. ELECTRICAL CONNECTIONS ... 25
9.10. DAMPER ... 25
9.11. COMBUSTION AIR AND FRESH AIR INTAKE ADAPTER INSTALLATION (OPTIONAL) ... 25
9.12. HOT AIR PLENUM ... 26
9.13. PARALLEL INSTALLATION ... 26
9.14. ELECTRICAL ELEMENT INSTALLATION (OPTIONAL) ... 29
9.14.1. INTRODUCTION ... 29
9.14.2. CONNECTING THE ELECTRICAL ELEMENT ... 29
10. THERMOSTAT INSTALLATION ... 30
10.1. WOOD FURNACE ONLY ... 30
10.1.1. COMBINATION WOOD-ELECTRIC OR WOOD-OIL FURNACE ... 30
10.1.2. COMBINATION WOOD-ELECTRIC-OIL ... 30
10.2. INSTALLATION OF AN AIR CONDITIONING UNIT ... 31
10.3. HEATPUMP INSTALLATION ... 31
10.4. INSTALLATION OF A DOMESTIC WATER PRE-HEATING SYSTEM OR A HUMIDIFIER ... 32
11. CONFIGURATION AND OPERATING INSTRUCTIONS ... 32
11.1. CONTROLS SYSTEM ... 32
11.2. SYSTEM CONFIGURATION ... 33
11.3. TOUCH SCREEN ... 33
11.3.1. ICONS DESCRIPTION ... 33
11.3.2. LANGUAGE SELECTION AND TEMPERATURE UNIT ... 34
11.4. ADDING AUXILIARY HEATING SOURCE AND SELECTION OF OPTIONS ... 34
11.4.1. TRANSITION TO AN AUXILIARY HEAT SOURCE ... 34
11.4.2. TRANSITION SETTINGS ... 34
11.4.3. AUXILIARY HEAT SOURCE PRIORITIZATION ... 35
11.4.4. EXTERNAL TEMPERATURE PROBE ... 35
11.4.4.1. "BI-ENERGY" FUNCTION ... 35
11.5. DISTRIBUTION BLOWER SPEED CONFIGURATION ... 36
11.5.1. DISTRIBUTION FAN SPEEDS ... 36
11.6. SYSTEM BALANCING ... 36
11.7. OPERATING INSTRUCTIONS ... 37
11.7.1. HEAT MODE ... 37

2

0045- Appendix D5 (page 4 of 80)

11.7.2. COOL MODE ... 37
11.7.3. CIRC MODE (AIR CIRCULATION) ... 37
11.8. WOOD HEATING ... 38
11.8.1. LIGHTING ... 38
11.8.2. PREHEATING ... 38
11.8.3. HEATING ... 38
11.8.4. EARLY SIGNS OF AN OVERFIRED FURNACE: ... 38
11.8.5. WOOD AS HEATING FUEL ... 39
11.8.6. PROLONGED POWER FAILURE ... 39
11.8.7. CHIMNEY FIRES ... 39
11.8.8. LOCAL FIRE DEPARTMENT ... 39
12. MAINTENANCE ... 40
12.1. MAINTENANCE OF THE EXCHANGERS ... 40
12.2. CHIMNEY MAINTENANCE ... 41
12.3. SMOKE PIPE INSPECTION ... 41
12.4. BLOWER MOTOR MAINTENANCE ... 41
12.5. FILTERS ... 41
12.5.1. AIR FILTER DIMENSIONS ... 41
12.6. DOOR GASKET MAINTENANCE ... 41
12.6.1. DOOR ADJUSTMENT PROCEDURE ... 41
13. REPLACEMENT PARTS ... 42
13.1. DOOR GLASS ... 42
13.2. GASKET ... 42
14. TROUBLESHOOTING ... 42
14.1. VALIDATING STATUS OF A COMPONENT ... 43
14.1.1. DISTRIBUTION BLOWER ... 43
14.1.2. AIR DAMPER, HOT WATER AND HUMIDIFIER ... 43
14.1.3. TEMPERATURE PROBE (RTD) ... 44
14.2. MAIN ERROR CODES, POSSIBLE CAUSES AND SOLUTIONS ... 44
14.2.1. UNIT OVERHEAT ... 44
14.2.2. NO HEAT ... 45
14.2.3. COMMUNICATION ERROR ... 45
14.2.4. SMOKE SMELL ... 46
14.2.5. THE LCD TOUCH SCREEN DOES NOT LIGHTUP. ... 46
14.2.6. AUXILIARY OVERRIDE ... 46
15. GENERAL ELECTRICAL DIAGRAM ... 47
16. ELECTRICAL DIAGRAM FOR PARALLEL FURNACE ... 48
17. ELECTRICAL DIAGRAM FOR ELECTRIC UNIT ... 49
WOOD/OIL COMBINATION FURNACE ... 50
18. GENERAL NOTES ... 52
19. DRAFT AND CHIMNEY ... 52
20. OIL TANK AND PIPING ... 52
21. BURNER PUMP ... 52
22. APPLIANCE INSTALLATION ... 53
22.1. UNIT LOCATION ... 53
22.2. PARALLEL INSTALLATION ... 53
22.3. MINIMUM CLEARANCES TO COMBUSTIBLE MATERIALS ... 53
22.4. FLOOR PROTECTION ... 54
22.5. HOT AIR PLENUM ... 54
22.6. CONNECTING PIPE AND MANUAL DAMPER ... 54
22.7. DIFFERENT INSTALLATION ... 55
22.8. COMBUSTION AIR ... 56
22.9. ELECTRICAL WIRING ... 56
22.10. THERMOSTAT ... 56
23. OPERATION INSTRUCTION ... 56
23.1. FAN SPEED CONTROL ... 56
23.2. COMBUSTION SAFETY CONTROL ... 56
23.3. PRE-PURGE ... 56
23.4. SAFE OPERATION ... 56

0045- Appendix D5 (page 5 of 80)

23.5. TEMPORARY DISENGAGEMENT OF THE BURNER **56**
23.6. COMBUSTION ADJUSTMENT AND VERIFICATION **57**
23.6.1. COMBUSTION VERIFICATION PROCEDURE: 57
23.6.2. ELECTRODES SETTING 58
23.7. APPLIANCE START-UP **59**
23.8. PROLONGED CLOSING **59**
24. TECHNICAL DATA **59**
24.1. UH –MAX CADDY **59**
25. MAINTENANCE **59**
25.1. MAINTENANCE **59**
25.2. SERVICE **60**
25.3. FILTERS **60**
26. ELECTRICAL DIAGRAM BECKETT OIL UNIT **61**
27. ELECTRICAL DIAGRAM RIELLO OIL UNIT **62**
28. LINK BOARD OPTIONS CONNECTIONS **63**
28.1. ELECTRICAL CONSUMPTION **63**
28.2. OUTDOOR PROBE **63**
28.3. HOT WATER **63**
28.4. 24V ADDITIONNAL EQUIPMENT **64**
28.5. AIR CONDITIONNING DAMPER **64**
28.6. HUMIDIFIER **64**
28.7. HEAT PUMP **65**
29. EXPLODED VIEW AND PART LIST **65**
PSG LIMITED LIFETIME WARRANTY (REGULAR) **78**
PSG LIMITED LIFETIME WARRANTY (PRIVILEGE) **79**

0045- Appendix D5 (page 6 of 80)

IMPORTANT NOTE:

THE INSTALLATION OF THIS CENTRAL HEATING SYSTEM MUST BE PERFORMED BY A QUALIFIED TECHNICIAN. PSG RESERVES ITSELF THE RIGHT TO VOID ITS WARRANTY OR DENY TECHNICAL ADVICE IF THE FURNACE HAS NOT BEEN SOLD OR INSTALLED BY A PROFESSIONAL.

REGISTER YOU WARRANTY ONLINE

To receive full warranty coverage, you will need to show evidence of the date you purchased your furnace. Keep your sales invoice. We also recommend that you register your warranty online at http://www.caddyfurnaces.com/en/warranty/warranty-registration
Registering your warranty online will help us track rapidly the information we need on your furnace.

WARNING : THE INSTALLATION OF THIS APPLIANCE REQUIRES THE ADDITION OF A BLOWER ASSEMBLY (PA08566) NOT INCLUDED.

1. INTRODUCTION

Take note that this furnace operates like an EPA wood burning stove. This applies to the lighting, the ember bed, and the minimum combustion air intake which was determined based on the use of good seasoned cordwood.

The Max Caddy furnace was tested and approved according to the CSA B415.1-10 Standard.

To optimize the efficiency of your furnace, here is some advice that you should follow when installing or operating your Max Caddy.

- Respect the local codes (when in doubt, consult your local dealer);
- Make sure your furnace is installed according to the instructions on the certification label;
- All controls and adjustments must be performed by a qualified technician. The blower speed must conform to the recommendations of local codes and should respect the static pressure ranges in the warm air plenum of the furnace.

We recommend that our wood burning hearth products be installed and serviced by professionals who are certified in the United States by NFI (National Fireplace Institute®) or in Canada by WETT (Wood Energy Technical Training) or in Quebec by APC (Association des Professionnels du Chauffage).

0045- Appendix D5 (page 7 of 80)

2. APPLIANCE PERFORMANCE[1]

Fuel type	Dry cordwood	
Recommended heating area[*]	1,500 to 3,500 ft² (139 to 325 m²)	
Firebox volume	4.9 ft³ (0.139 m³)	
Maximum burn time[*]	17 hours	
Maximum input capacity (dry cordwood)[2]	421,000 BTU	
Overall heat output rate (min. to max.)[3]	19,243 BTU/h to 67,069 BTU/h (5.6 kW to 19.6 kW)	
Nominal heat output at 15lb/ft³ fuel loading density	100,000 BTU/h	
Average overall efficiency[4]	78.9% (HHV)[5]	85 % (LHV)[6]
Delivered heat output rate (min. to max.)[7]	16,109 BTU/h to 54,578 BTU/h (4.7 kW to 16.0 kW)	
Average delivered efficiency[8]	64.8% (HHV)[5]	70.2% (LHV)[6]
Optimum efficiency[9]	85.8%	
Average particulate emissions rate[10][11]	0.735 lb/mmBTU (0.316 g/MJ)	
Average CO[12]	13.67 lb/mmBTU (5.88 g/MJ)	
Average electrical power consumption [13]	360 Wh	

[*] Recommended heating area and maximum burn time may vary subject to location in home, chimney draft, heat loss factors, climate, fuel type and other variables. The recommended heating area for a given appliance is defined by the manufacturer as its capacity to maintain a minimum acceptable temperature considering that the space configuration and the presence of heat distribution systems have a significant impact in making heat circulation optimum.

(1) Values are as measured per CSA B415.1-10, except for the recommended heating area, firebox volume, maximum burn time and maximum input capacity. Performances based on a fuel load prescribed by the standard at 10 lb/ft³ and with moisture content between 18% and 28%.

(2) Input value at 10lb/ft³ fuel loading density and dry energy value of 8,600BTU/lb.

(3) Overall: Radiated and delivered heat together at10lb/ft³ fuel loading density over one total burn cycle.

(4) Efficiency based on delivered heat when allowing cycling from high to low burn to simulate thermostat demand.

(5) Higher Heating Value of the fuel.

(6) Lower Heating Value of the fuel.

(7) Delivered: Remotely provided to other rooms through ducting at 10 lb/ft³ fuel loading density over one total burn cycle.

(8) Efficiency based on radiated and delivered heat when allowing cycling from high to low burn to simulate thermostat demand.

(9) Optimum overall efficiency at a specific burn rate (LHV).

(10) Based on delivered heat output.

(11) This appliance is officially tested and certified by an independent agency.

(12) Carbon Monoxyde. Based on overall heat output at 10lb/ft³ fuel loading density.

(13) Unless stated otherwise, measures were taken directly at the main power source and include all electrical components present in the appliance.

0045- Appendix D5 (page 8 of 80)

3. GENERAL FEATURES

Maximum log length	25 in (635 mm) / north-south*
Diameter of the flue collar	6 in (152 mm)
Recommended connector pipe diameter	6 in (152 mm) if installed as wood only or combined wood-electric
Mandatory connector pipe diameter	7 in (178 mm) if installed as combined wood-oil
Recommended chimney diameter	6 in (152 mm) if installed as wood only or combined wood-electric
Mandatory chimney diameter	7 in (178 mm) if installed as combined wood-oil
Required type of chimney	CAN/ULC S629, UL 103 HT (2100 °F)
Baffle material	C-Cast
Alcove installation	Not approved
Mobile home installation‡	Not approved
Appliance weight (without option)	614 lb (279 kg)
Shipping weight (without option)	729 lb (331 kg)
Blower (wood or wood/electric options only)	1/2 HP, direct drive, 4 speeds, 2,100 CFM
Filter – dimensions (Width x Depth x Height) (included with optional blower assembly)	16 in x 20 in x 1 in (406 mm x 508 mm x 25 mm)
Filter – quantity	1
Particulate emission standard	EPA / CSA B415.1-10
USA standard (safety)	UL 391, UL 1995, UL 727
Canadian standard (safety)	CSA B366.1, CSA C22.2 no 236, CAN/CSA B140.4

*** East-west: through the door you see the longitudinal sides of the logs; north-south: through the door you see the tips of the logs.*

‡ *Mobile home (Canada) or manufactured home (USA): The US department of Housing and Urban Development describes "manufactured homes" better known as "mobile homes" as followed; buildings built on fixed wheels and those transported on temporary wheels/axles and set on a permanent foundation. In Canada, a mobile home is a dwelling for which the manufacture and assembly of each component is completed or substantially completed prior to being moved to a site for installation on a foundation and connection to service facilities and which conforms to the CAN/CSA-Z240 MH standard.*

0045- Appendix D5 (page 9 of 80)

4. SPECIFICATIONS

Color	Grey
Thermostatic control	Yes
Door type	Single, glass with cast iron frame
Glass type	Ceramic glass
Air return plenum – dimensions (Depth or Height)	17 15/16 in
Air return plenum – dimension (Width)	19 15/16 in
Hot air plenum – dimensions (Depth or Height)	32 1/8 in
Hot air plenum – dimension (Width)	25 3/8 in
Ash pan – dimensions (Width x Depth x Height)	11 15/16 in x 19 5/8 in x 2 5/8 in
Clearance – front	48 in
Clearance – back wall	24 in from the blower housing recommended service clearance
Clearance – side wall	6 in without options installed
Clearance – opposite side wall	24 in recommended service clearance
Clearances – ducts	6 in for the first 6 feet with heat shield and 1 in after
Clearance – recommended for maintenance on option side	24 in
Burner – efficiency	Beckett AFG : 85 % / Riello : 87%
Burner – standard	Beckett AFG
Burner – other brands approved	Riello
Burner – location	Left or right
Burner – recommended clearance for maintenance	24 in
Burner – mandatory connector pipe diameter (Wood-oil)	7 in
Burner – mandatory exhaust pipe diameter	5 in
Burner – location of exhaust pipe	Left or right
Burner – capacity at input #1 / #2 Beckett	91,000 BTU (27 kW) / 120,000 Btu (35 KW)
Burner – orifice at input #1 / #2 Beckett	0,65 gal/h* 70° W (2,46 l/h) for both inputs
Burner – pump pressure at input #1 / #2 Beckett	100 PSI / 175 PSI
Burner – capacity at input #1 / #2 Riello	91,000 BTU (27 kW) / 120,000 Btu (35 KW)
Burner – orifice at input #1 / #2 Riello	0.50 gal/h* 70° W (1.89 l/h) / 0.65 gal/h* 70° W (2.46 l/h)
Burner – pump pressure at input #1 / #2 Riello	150 PSI / 165 PSI
Electric element – location	Left or right
Electric element – clearance recommended for maintenance	24 in
Electric element – recommended (maximum output)	20 kW
Electric element – other optional (maximum output)	25 kW
Top cold air plenum option – material	Galvanized steel
Top cold air plenum option – dimensions (Width x Depth x Height)	20 in x 18 in x 17 1/4 in
Top cold air plenum option – smoke pipe diameter	6 in
Fresh air intake adapter option	5 in
Fresh air intake adapter – connection location	Left or right
Fresh air intake adapter – connecting pipe diameter	6 in
Tested and listed as per applicable standards	By an accredited laboratory (CAN/USA)
Warranty	Limited lifetime

* US Gallon (1 US Gallon = 0,83 Imperial Gallon)

0045- Appendix D5 (page 10 of 80)

5. MAX CADDY FURNACE TECHNICAL DATA

MODEL	(DIRECT DRIVE)			THEORETICAL DEBIT	TEMP VAR.	STATIC PRESSURE		FILTER
	VENT	MOT.	VIT.	(CFM)	(OF)	MIN.	MAX.	(1)
						INCH H2O		
MAX CADDY WITH BLOWER / MAX CADDY ADD-ON (PARALLEL)	G-10	1/2	4	2,100	100	0,2	0,5	16" x 20" x 1"

6. FURNACE DIMENSIONS

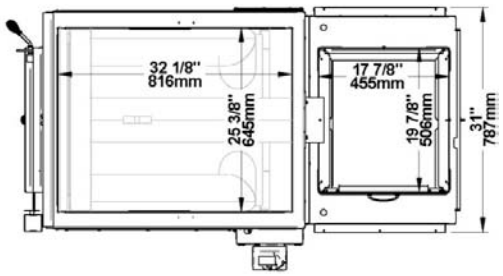

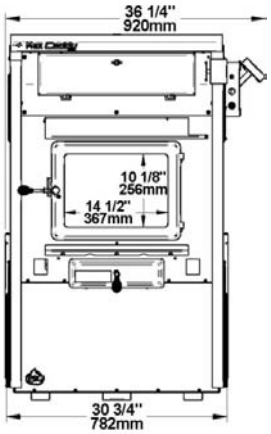

WOOD AND WOOD/ELECTRIC

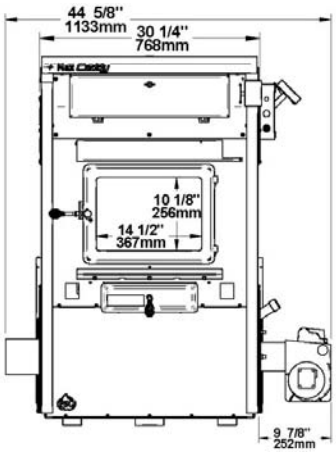

WOOD/OIL

0045- Appendix D5 (page 11 of 80)

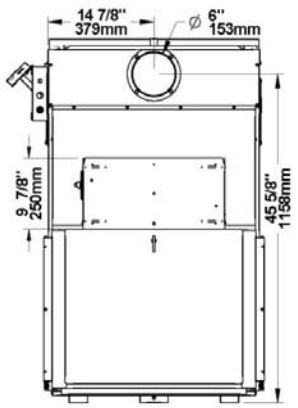

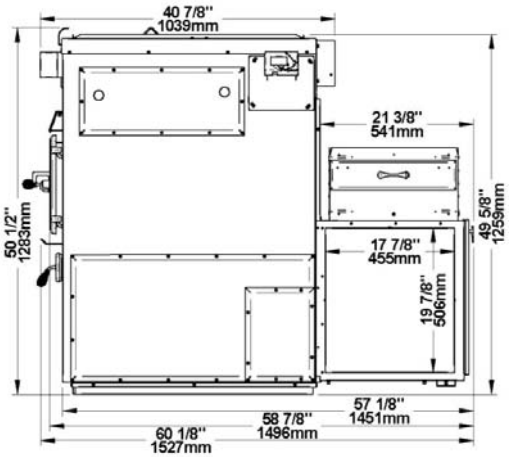

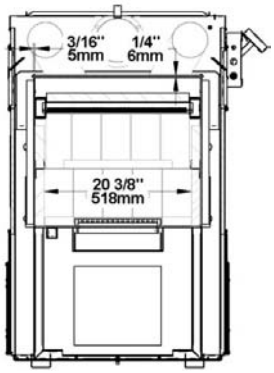

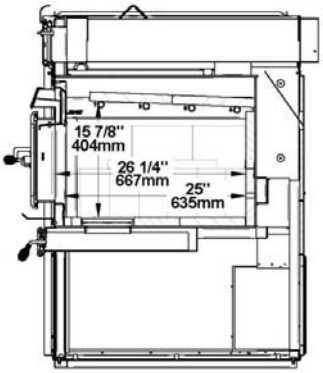

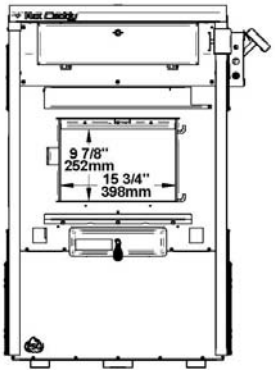

10

0045- Appendix D5 (page 12 of 80)

7. CHIMNEY AND DRAFT

This furnace must be connected to a chimney certified for use with wood burning heating appliances. A 7-inch chimney and connector must be installed for the Max Caddy if it is used as a wood-oil unit, a wood-electrical-oil unit or if an oil option may be installed in the future. If the furnace is to be used as a wood only unit or a wood-electric, then a 6-inch chimney is recommended.

The unit is not to be connected to a chimney flue serving another appliance. If the chimney draft exceeds 0.06 IN.W.C., a barometric draft control should be installed on the smoke pipe. Never install a manual damper. The barometric control must be adjusted so that the maximum draft measured at the furnace outlet does not exceed -0.06 IN.W.C. Please note that a draft exceeding 0.06 IN.W.C. could produce an uncontrollable fire. **On the other hand, the minimum draft required is 0.04 IN.W.C. in the evacuation pipe on the wood side, no matter what type of furnace (WOOD, WOOD/ELECTRIC OR WOOD/OIL). The adjustment should in no case be modified to increase combustion.**

8. SAFETY RULES

WARNING:

THE INFORMATION GIVEN ON THE CERTIFICATION LABEL AFFIXED TO THE APPLIANCE ALWAYS OVERRIDES THE INFORMATION PUBLISHED, IN ANY OTHER MEDIA (OWNER'S MANUAL, CATALOGUES, FLYERS, MAGAZINES AND/OR WEB SITES).

8.1. GENERAL REQUIREMENTS

MAKE SURE THE CHIMNEY OUTLET AND THE PIPES ARE CLEAN AND IN GOOD CONDITION.

DO NOT USE CHEMICAL PRODUCTS OR LIQUIDS TO LIGHT THE FIRE.

DO NOT BURN WOOD COATED WITH PAINT, GLUE OR CHEMICAL PRODUCTS.

DO NOT BURN WASTES OR FLAMMABLE LIQUIDS SUCH AS GASOLINE, NAPHTHA, MOTOR OIL, OR OTHER UNSUITABLE MATTERS.

DO NOT STORE WOOD IN THE VICINITY OF THE FURNACE. RESPECT THE REQUIRED CLEARANCES BETWEEN COMBUSTIBLE MATERIALS AND THE SOURCE OF HEAT.

WARNING

THE ASH DRAWER AND EXCHANGERS ACCESS PANEL GET VERY HOT. DO NOT MANIPULATE WITH BARE HANDS.

8.2. ODOUR FROM THE PAINT

It is normal that smoke and odours emanate from the unit when you first light it. It is recommended to burn it at high rate and ventilate the building until the odours disappear. The smoke is not toxic. **This should be done before the ducts are connected to the furnace to prevent smoke dispersion in the house.**

8.3. ASH DISPOSAL

Ashes must be placed in a metal container with a tight fitting lid. The container should be stored outdoor, well away from combustible materials. This container should not contain any other type of waste. If the ashes are meant to be buried in soil, wait until all embers have thoroughly cooled before burying.

8.4. CREOSOTE BUILD-UP AND REMOVAL

When wood is burned slowly, it produces tar and other organic vapours which, when combined with moisture, form creosote. The creosote vapours condensate in a relatively cool chimney flue. As a result, creosote residues accumulate inside the flue lining and the exchangers.

N.B.: To minimize the frequency of the chimney cleaning, buy your firewood at least one year before using it. Store it in a dry place in order to obtain the minimum moisture rate and optimize the efficiency. Do not store wood or combustible materials within the installation minimum clearances or the space required to reload the appliance and remove ashes.

0045- Appendix D5 (page 13 of 80)

When ignited, creosote produces an extremely hot fire inside the chimney.

In the first year of use, inspect the chimney system at regular intervals to determine a cleaning cycle. Depending on the type of wood used and its quality, a semi-annual cleaning may be required. A yearly cleaning is mandatory. **If a significant layer of creosote has accumulated, it must be removed immediately to eliminate the risk of chimney fire.**

Remember that a small, hot fire is preferable to a large smouldering one to prevent creosote build-ups within the system. Prepare an emergency procedure in case of a chimney fire. **It is recommended to clean the heat exchangers thoroughly at the end of season in order to prevent corrosion.**

8.5. SMOKE DETECTOR

We highly recommend the use of a smoke detector. It must be installed at least 15 feet (4,57 m) from the appliance in order to prevent undue triggering of the detector when reloading.

8.6. DOOR GLASS

To maintain a clean and safe installation, do not build your fire too close to the glass or allow logs to lean on the glass.

Do not operate your furnace at too low a setting. Keep the air inlet opened long enough during the fire start-up to prevent the fire from smouldering, which could stain the glass.

An intense fire will help keep the glass clean. However, in the event that your glass gets stained, which should not occur under normal operating conditions, you will have to clean it using a wet cloth and a fireplace glass cleaner. Clean the glass **ONLY** when the unit has cooled down. Do not use abrasive cleanser.

WARNING: Avoid knocking or scratching the glass. It could crack or break.

8.6.1. GLASS SPECIFICATIONS

The glass is made of 3/16" (5mm) thick ceramic glass.

Do not operate your wood furnace with a broken glass, as this could seriously damage your furnace.

You can purchase a replacement glass from your PSG dealer.

8.7. ASH DRAWER

Your furnace is equipped with an ash drawer to collect ashes produced by the combustion of wood. This drawer must not be left open during combustion as this may cause over firing and serious damages to the furnace. Moreover, the additional air created could cause the dispersion of ashes in the ventilation system. **The drawer must be cleaned regularly. Use a vacuum cleaner to remove any ashes around the drawer in order to avoid the dispersion of ashes in the ventilation system.**

It is important that the door and the ash drawer be kept closed while the appliance is in use. Maintain all gaskets in good condition; in case of deterioration, contact your dealer for a genuine replacement gasket.

8.8. ASH GRATE

You must replace the ash grate if it is damaged and a replacement may be obtained from your dealer.

0045- Appendix D5 (page 14 of 80)

INSTALLATION AND OPERATION INSTRUCTIONS FOR

MAX CADDY WOOD ONLY FURNACE, COMBINED WOOD / ELECTRIC OR PARALLEL ADD-ON PF01102

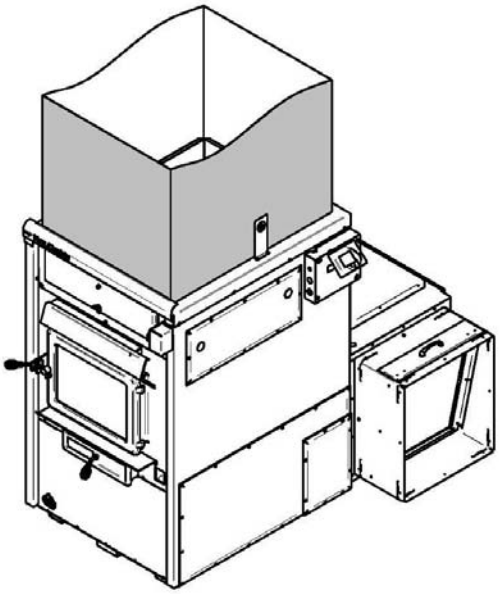

MAX CADDY FURNACE – WOOD ONLY

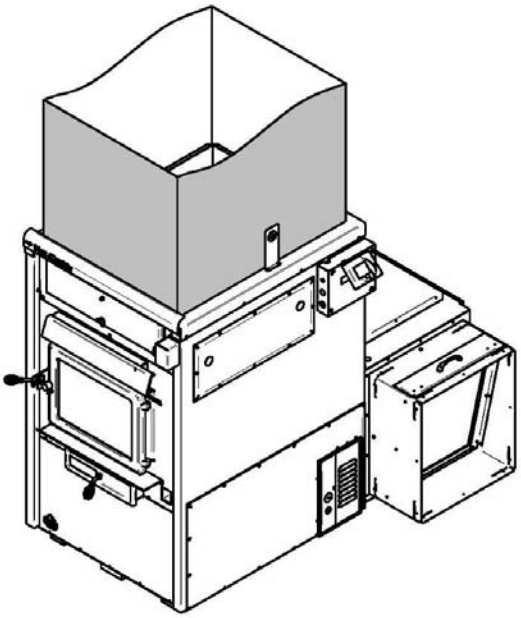

MAX CADDY FURNACE – COMBINED WOOD/ELECTRIC

13

0045- Appendix D5 (page 15 of 80)

9. INSTALLATION INSTRUCTIONS

Installation must be made in accordance with the CSA B.365 « Installation code for solid-fuel-burning appliances and equipment » standard in Canada and NFPA 90B « Standard for the installation of warm air heating and air conditioning system » in the United States. Moreover, for all electrical connection, the Canadian standard CSA C22.1 « Canadian electrical code » and in the United-States NFPA 70 standard « National Electrical Code » must be followed.

All controls and adjustments must be performed by a qualified technician. The blower speed must conform to the recommendations of the Warm Air Heating and Air Conditioning National Association and should respect the static pressure ranges in the warm air plenum of the furnace

We recommend that our woodburning hearth products be installed and serviced by professionals who are certified in the United States by NFI (National Fireplace Institute®) or in Canada by WETT (Wood Energy Technical Training) or in Quebec by APC (Association des Professionnels du Chauffage).

Inspect the furnace to make sure that nothing has been damaged in the shipping. Pull out the wiring kit and the instructions manual from the firebox of the furnace and the accessories from the flue pipe.

The following section contains installation instructions for the Max Caddy wood only, Max Caddy wood / electric and Max Caddy add-on parallel configurations.

9.1. BLOWER INSTALLATION

To use the wood only configuration, the blower assembly (PA08566 – sold separately) is required. The installation instructions are provided with the blower.

9.2. LINK BOARD INSTALLATION AND CONNECTION

The following installation instructions are identical whether the furnace controls are located on the left or on the right of the furnace. The most accessible side is preferred to facilitate the connection of auxiliary heating sources or for servicing.

The components to be installed are in the combustion chamber of the furnace.

Remove the link board housing cover.

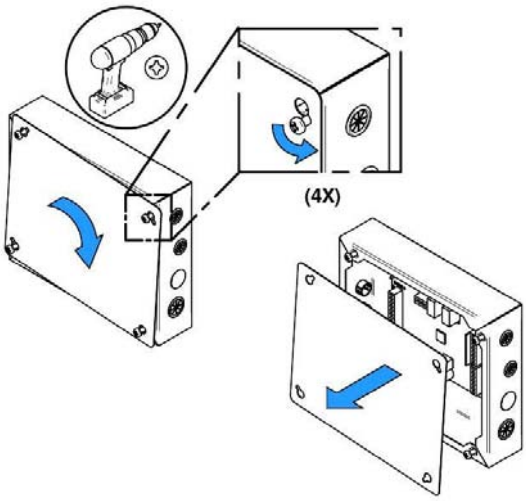

0045- Appendix D5 (page 16 of 80)

Remove the four screws on the furnace, located on the side of the desired installation.

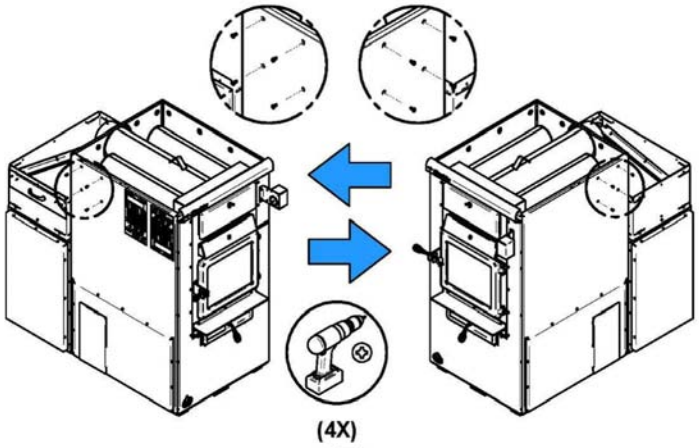

Align the holes of the board housing the holes on the side of the furnace. Use the screws removed in the previous step to secure the housing to the furnace.

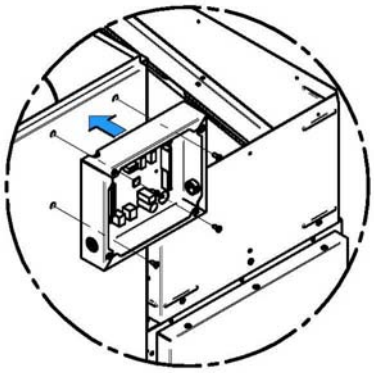

Once installed, the link board must be connected to the system with the telecommunication wire of the power board. The wire is located in the blower box. To access it, remove the air return box.

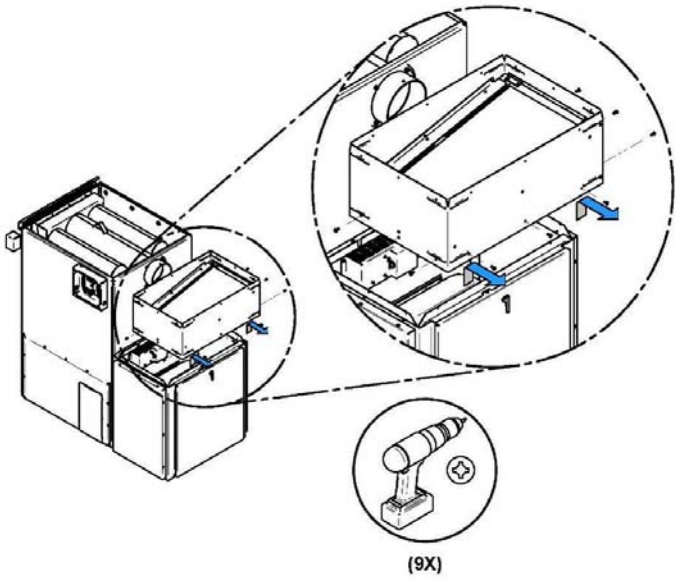

15

0045- Appendix D5 (page 17 of 80)

Take the telecommunication wire and pull it through the grommet located on the side where the housing board is installed.

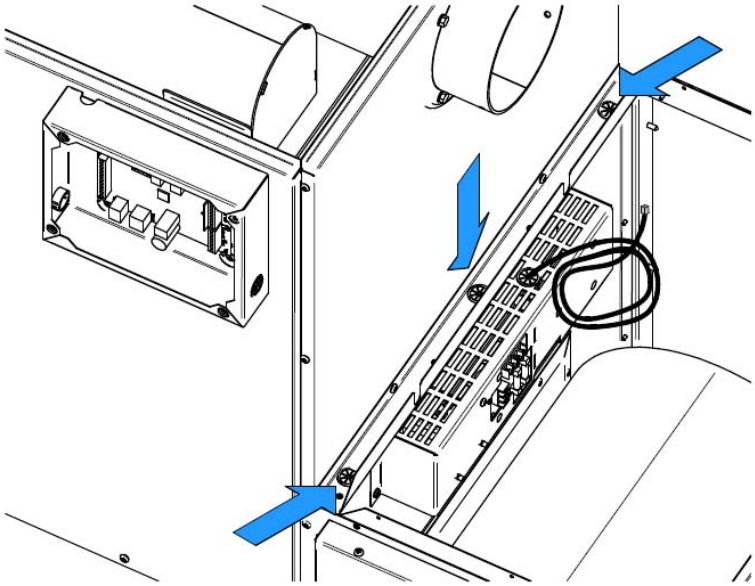

Once the telecommunication wire is out on the desired side, run it along the back of the furnace and pass it through the grommet at the bottom of the link board housing. Complete the connection by plugging the 8 strands telecommunication wire in the right connector, shown by the arrow.

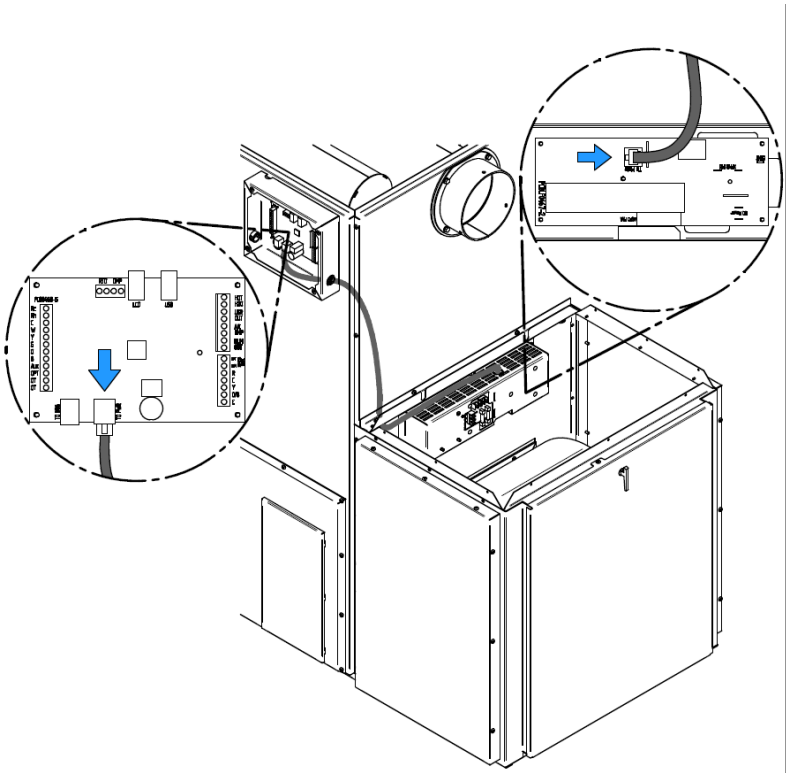

16

0045- Appendix D5 (page 18 of 80)

Your furnace should also be connected to a 115V power source. To do so, open the cover of the power board housing.

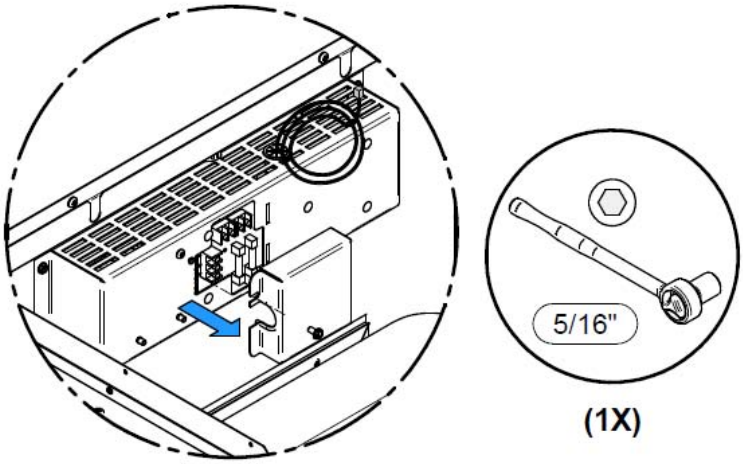

Connect the power cord to the terminals N (Neutral) F (Ground) L (Line). Refer to wiring diagram for connecting components. When done, secure the wires with a BX connector (not included) and replace the blower box cover.

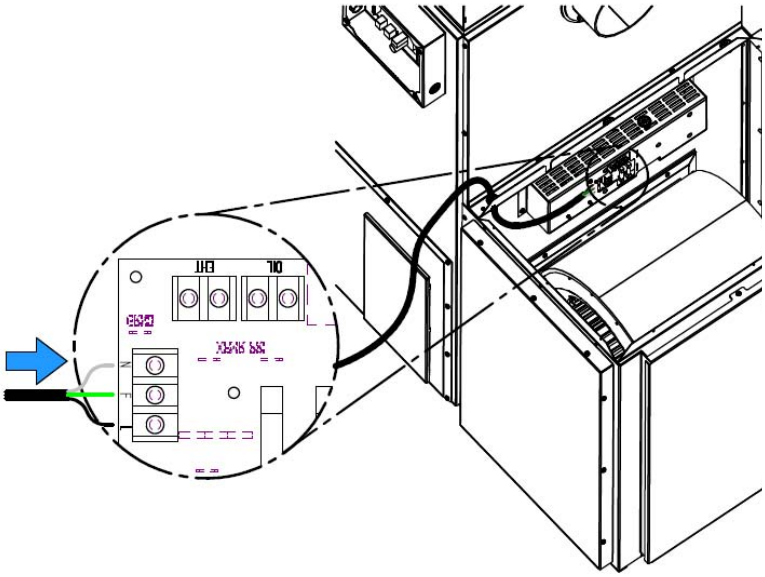

17

0045- Appendix D5 (page 19 of 80)

9.3. TOUCHSCREEN INSTALLATION AND CONNECTION

The touch screen is used to operate the system. It must be installed on the support provided at the back of the furnace, on the same side as the link board housing.

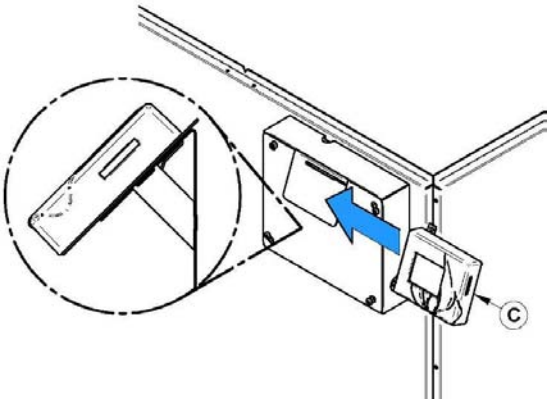

Connect link board with the touch screen using the telecommunication wire provided with the user manual. Plug the telecommunication wire in connector labeled LCD and pull it out of the board housing through the top grommet. Simply run the wire on the side of the furnace using the plastic ties supplied with the user manual. Replace the access panel of the link board. Note that the touch screen is removable if access is restricted.

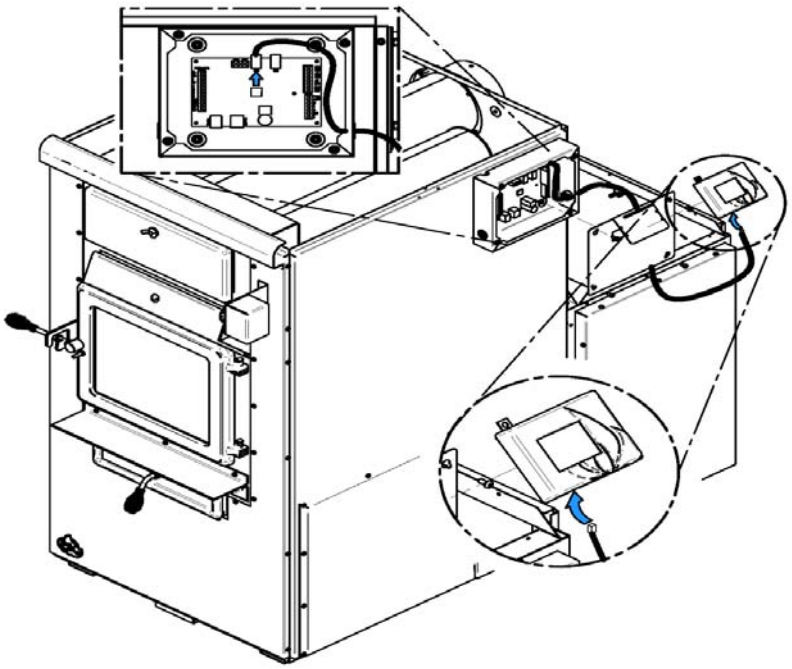

18

0045- Appendix D5 (page 20 of 80)

9.4. HOT AIR PLENUM TEMPERATURE PROBE INSTALLATION AND CONNECTION (RTD)

On the Max Caddy, a RTD has to be installed on the side of the furnace using the support provided with the unit. The RTD is a sensor that reads the temperature inside the hot air plenum. It is critical to the good operation of the furnace. Refer to electric diagram for connection details. It is important that the RTD and the RTD support be properly fixed onto the hot air plenum.

WARNING: USE WIRING SUITABLE FOR 75 °C (not included).

STEP 1: Remove the two screws already secured to the furnace (B) on the side where you have chosen to install the link board. Then, secure the RTD support (A) using the two screws you previously removed.

STEP 2: Using a drill and a 9/32" bit, drill a hole in the hot air plenum so that the RTD rod can pass into it.

STEP 3 and 4: Secure the RTD in place on the hot air plenum using the two self-tapping screws provided with the owner's manual.

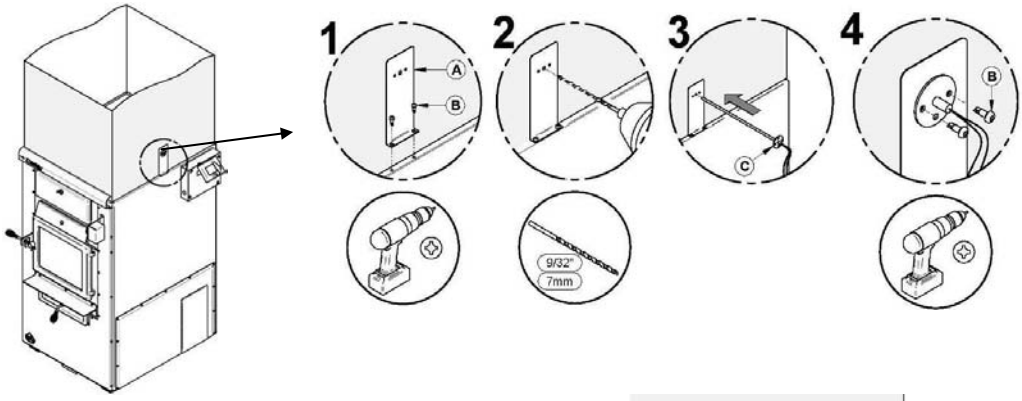

Once the RTD is installed on the support, proceed to its connection to the link board. Pass the RTD wires in the grommet and exit them close to the link board. For board connections, refer to the wiring diagram.

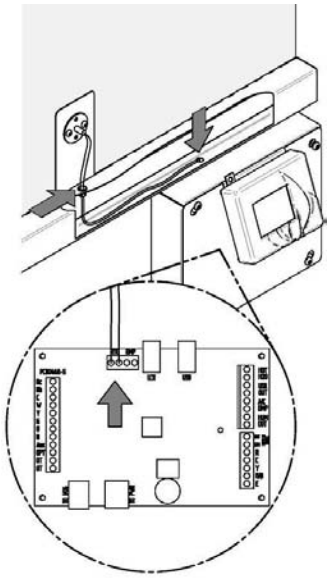

0045- Appendix D5 (page 21 of 80)

9.5. SERVOMOTOR INSTALLATION AND CONNECTION

Your Max Caddy furnace is equipped with a servomotor. To install it, simply screw it in place in the two pre-drilled holes in the front of the furnace using two screws as shown below.

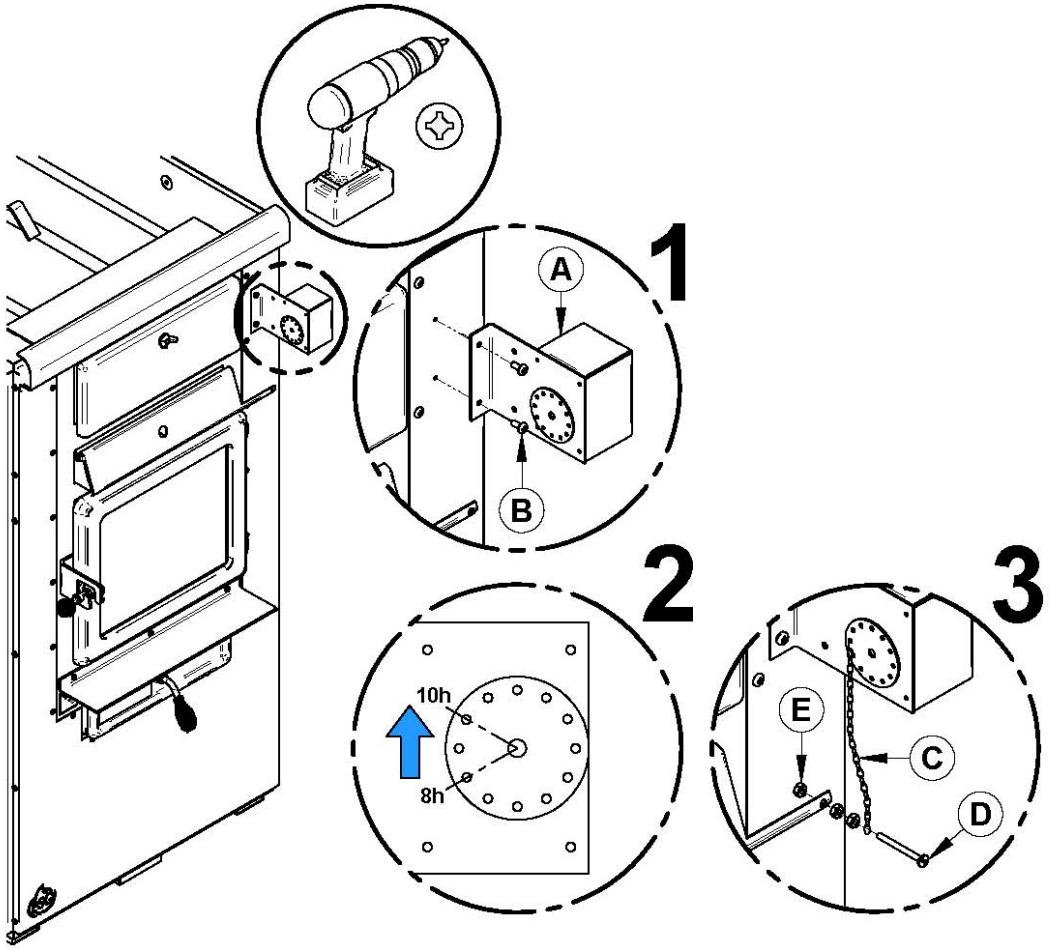

Once installed, install the chain linking the servomotor with the air inlet damper as shown above. The chain must have a set of 1/8". When there is no call for heat, the air inlet damper must be completely closed and the chain must be hooked to the servomotor at the “8 o’clock” position.

0045- Appendix D5 (page 22 of 80)

Then, you must connect the servomotor and the link board. Take the wires out of the servomotor and enter the wires in the wire cover through the grommet. Pull them out through the grommet next to the link board housing.

For connection, refer to wiring diagram.

WARNING: USE WIRING SUITABLE FOR 75 °C (not included).

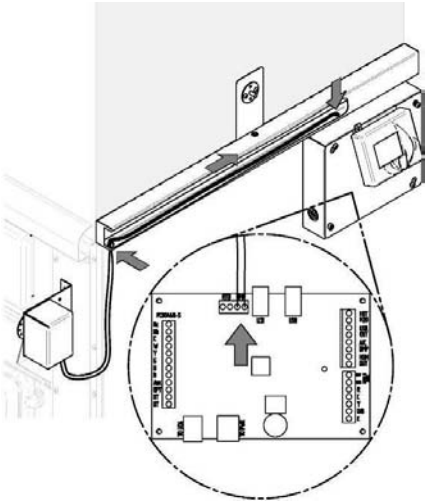

9.6. UNIT LOCATION

For a safe and quiet operation, the furnace must be leveled in both directions and supported evenly to ensure stability.

The furnace must be installed where outside air supply will be sufficient for proper combustion. In airtight houses, it might be necessary to install an outside air inlet (See Section 9.11 - COMBUSTION AIR AND FRESH AIR INTAKE ADAPTER INSTALLATION (OPTIONAL))

The furnace must be positioned so that the connector is as short as possible. Minimize the use of 90° elbows.

The owner must ensure a proper installation to allow a safe operation of the appliance.

9.7. MINIMUM CLEARANCES TO COMBUSTIBLE MATERIALS AND FLOOR PROTECTION

N.B.: This appliance must be installed in accordance with the instructions on the certification plate applied on the unit.

THE INSTALLATION OF THE HEAT SHIELD (-1-) PROVIDED WITH THE FURNACE IS MANDATORY.

0045- Appendix D5 (page 23 of 80)

9.7.1. MINIMUM CLEARANCES TO COMBUSTIBLE MATERIALS

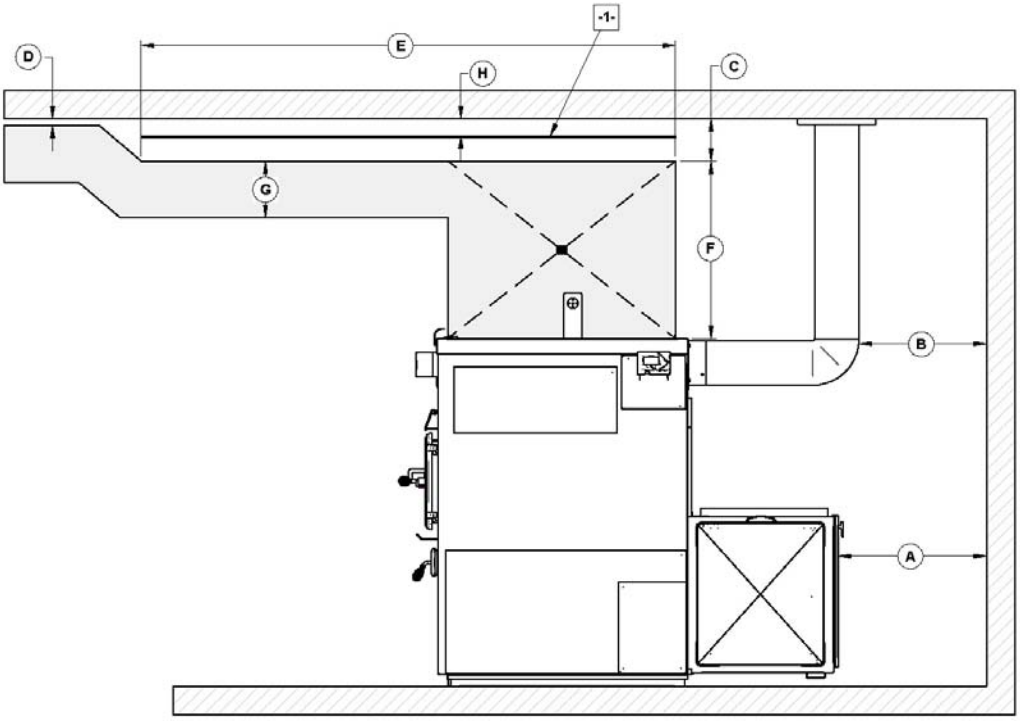

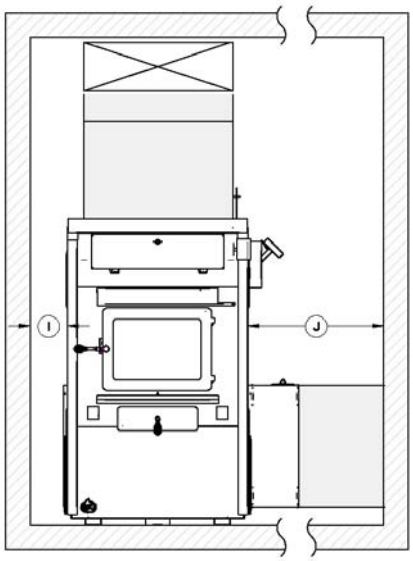

MINIMUM CLEARANCES			
A	24" (610 mm)	**G**	8" (204 mm)
B	18" (458 mm)	**H**	1.5" (38.1 mm)
C	6" (153 mm)	**I**	6" (153 mm)
D	1" (26 mm)	**J**	24" (610 mm)
E	72" (1 829 mm)		
F	24" (610 mm)		
-1-	**HEAT SHIELD**		

22

0045- Appendix D5 (page 24 of 80)

9.7.2. MINIMUM CLEARANCES TO COMBUSTIBLES MATERIALS FOR AIR RETURN DUCT

The return air duct should be at least equal in size to the return air plenum. The air return duct can be installed at zero clearance to combustibles.

9.7.3. MINIMUM CLEARANCES TO COMBUSTIBLES MATERIALS FOR HOT AIR PLENUM

Plenums installed on the furnace must be made of metal in accordance with CSA B365 or NFPA 90B. The hot air duct can be passed through the side wall with a clearance of six (6) inches around thereof.

9.7.4. FLOOR PROTECTION

If the floor is made of non combustible material, no floor protector is required.

If the floor is made of combustible material, a non combustible material floor protector is required (see table below).

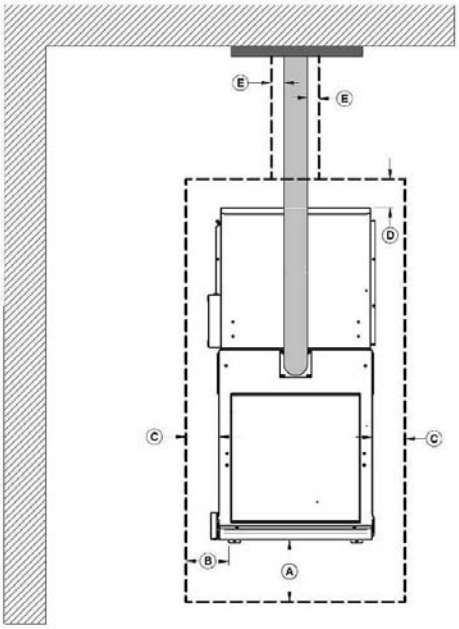

	FLOOR PROTECTION*	
	CANADA	**USA**
A	18" (457 mm) From door opening	16" (406 mm) From door opening
B	N/A (USA only)	8" (203 mm) From door opening
C	8" (203 mm)	N/A (Canada only)
D	8" (203 mm) – Note 1	N/A (Canada only)
E	N/A (USA only)	Note 2

**Steel with a minimum thickness of 0.015" (0.38 mm) or ceramic tiles sealed together with grout. No protection is required if the unit is installed on a non-combustible floor (ex: concrete).*

***Note 1**: The floor protection at the back of the furnace is limited to the furnace's required clearance (A) if such clearance is smaller than 8 inches (203 mm).*

***Note 2**: Only required under the horizontal section of the connector. Must exceed each side of the connector pipe by at least 2 inches (51 mm).*

0045- Appendix D5 (page 25 of 80)

9.8. FLUE AND BAROMETRIC DRAFT CONTROL CONNECTION

Before connecting the stove pipe, make sure you have removed any accessory from the flue pipe such as the scraper, shovel, and the poker.

The flue outlet on the Max Caddy furnace is 6" in diameter and the wood only or wood/electric models may be installed with a 6" chimney approved for use with wood burning heating appliances (2100°F). However, it is mandatory to use a 7" diameter chimney if the retrofit to a wood/oil configuration is probable. In that case, a 6" to 7" reducer must be installed at the flue outlet of the furnace. If the draft exceeds 0.06 IN.W.C., a barometric control must installed. **Never install a manual damper.** Secure the exhaust pipe to the flue adapter with three screws.

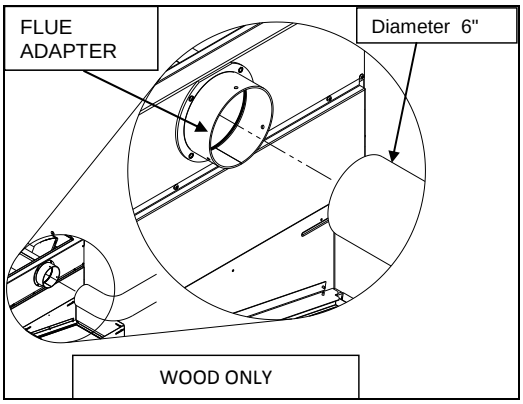

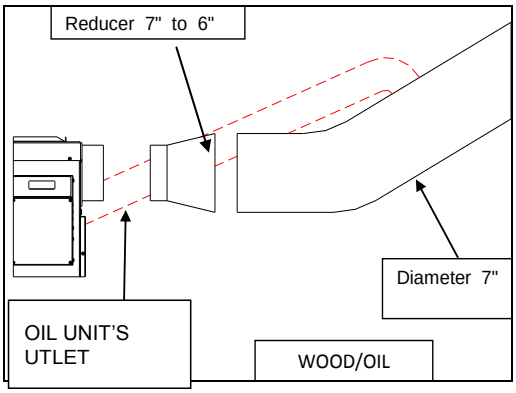

For a proper installation, follow the advice below:

- All the exhaust pipe joints must be secured with three screws.
- Make sure that each screw goes through the inner wall of both connectors (male and female). See pictures below showing a male-female coupling.
- A minimum rise of ¼" per horizontal foot must be respected.

PROPER INSTALLATION

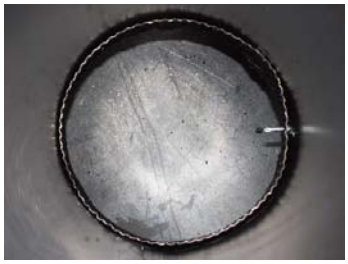

IMPROPER INSTALLATION

0045- Appendix D5 (page 26 of 80)

9.9. ELECTRICAL CONNECTIONS

The following instructions do not replace those of the local code.

Installation and verification of this appliance must be done by a qualified service man.

All wiring from the service panel to the heating unit must comply with the electrical code in force and all local regulations. It is recommended to feed the furnace with its own electrical circuit of 15 amps at 120 volts with a breaker (see wiring diagram).

9.10. DAMPER

If the draft exceeds 0.06 INW.C., a barometric damper must be installed. The barometric damper must be adjusted so that the maximum draft measured at the furnace outlet is limited to 0.06 IN.W.C. Please note that a draft higher than 0.06 IN.W.C. will reduce efficiency and could result in an uncontrollable fire. **On the other hand, the minimum draft to be respected is 0.04 IN.W.C. in the evacuation pipe on the wood side, no matter what type of furnace is use (WOOD, WOOD/ELECTRIC, WOOD/OIL)**

9.11. COMBUSTION AIR AND FRESH AIR INTAKE ADAPTER INSTALLATION (OPTIONAL)

When the furnace and the chimney are completely cold, it may be necessary to provide fresh air by opening a door or a window for a few minutes while lighting the fire. Take note that a house constructed or renovated in order to be airtight may lack the volume of fresh air necessary for the proper combustion of a solid-fuel heating appliance.

In such a case, when starting up the fire, do not operate appliances that evacuate air outside the house, such as:

- Range hood
- Air exchanger
- Clothes dryer
- Bathroom fan
- Ventilated central vacuum system

A fresh air supply may be necessary to prevent solid fuel units from rejecting products of combustion into the house. The indications used to determine if an additional fresh air supply is necessary are not appropriate for all the situations. When in doubt, it is recommended to install a fresh air supply.

A fresh air supply may be needed if:

- Solid fuel units present anomalies, such as irregular draft, smoke return, bad combustion, and/or reversed draft (whether there is combustion or not);
- Existing solid fuel units such as a stove or fireplace release odours, heat badly, cause smoke returns, or reversed draft (whether there is combustion or not);
- The opening of a window, even slightly, in calm weather (windless), eliminates every problem mentioned above ;
- The house is equipped with a tight vapour barrier and adjusted windows, and/or is equipped with an interior air mechanical evacuation device ;
- There is excessive condensation on the windows in winter; and
- The house is equipped with a ventilation system.

If, according to these symptoms or other similar ones, there is insufficient combustion air, it is necessary to ensure an additional combustion air supply.

Additional combustion air can be provided with the following methods, provided that they satisfy chapter 5 of the CSA B365 standard for Canada:

- Direct connection: solid fuel units can be connected directly to a source of new combustion air only if they are certified for this kind of installation, which must respect the manufacturer's instructions. The Max Caddy can be installed with an optional sealed fresh air kit that has been tested with the unit. Consult your dealer.
- Indirect method: new combustion air can be brought into a pipe located within approximately 300mm (12 inches) of the unit. If the pipe is too close to the furnace, it may interfere with its operation.
- Mechanical ventilation system: if the house is equipped with a ventilation system (air exchanger or heat recovery), the ventilation system may provide sufficient auxiliary air to the solid fuel unit. Otherwise, the owner should be informed that the ventilation system may have to be rebalanced by a ventilation technician after the installation of the solid fuel unit.

0045- Appendix D5 (page 27 of 80)

NOTE:
It is recommended to install an outside air inlet with a diameter of at least 4" in the room where the heating appliance is installed (see drawing below). It is preferable to choose a wall which is not exposed to dominant winds, depending on the conditions surrounding your house.

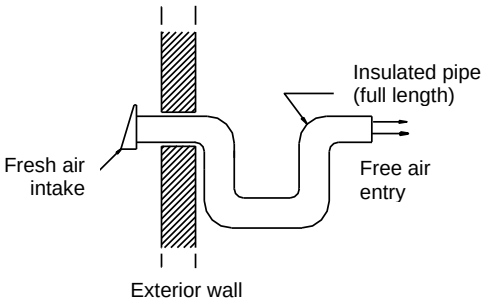

N.B. The owner of the furnace is responsible for the room's air quality in case of negative pressure or temporary negative pressure.

If there is a fan in the wood storage room, make sure it does not create a depression in the room where the furnace is installed.

For more information regarding the installation of fresh air intake adapter, refer to the option's manual.

9.12. HOT AIR PLENUM

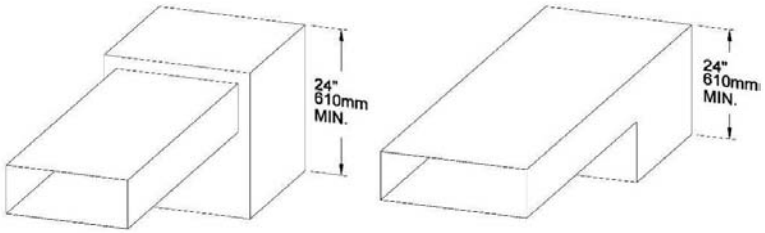

The hot air plenum coming out of the furnace is to have a minimum height of 24" (610 mm). These dimensions for all hot air furnaces are in accordance with the standards CSA B140.4, UL 391 and UL 727.

NOTE: TO ENSURE ADEQUATE STATIC PRESSURE, THE SYSTEM SHOULD BE BUILT IN A WAY THAT THE VOLUME OF COLD AIR RETURN IS AT LEAST EQUAL OR SLIGHTLY HIGHER THAN THE VOLUME OF THE HOT AIR DISTRIBUTION.

9.13. PARALLEL INSTALLATION

The installation of the Max Caddy with another furnace using the same ductwork is not allowed in Canada. **This type of installation is only allowed in the United States**. Ideally, the maximum BTU input of the existing oil, gas, or electric furnace should be equal or higher than the maximum BTU input of the wood furnace. It is mandatory to respect minimum clearances between the ductwork and combustible material as if the wood furnace was installed as a standalone unit. The ductwork and furnace should be adjusted in order to reach a static pressure of at least 0.20 IN.WC, but not more than 0.50 IN.WC. A back-flow damper should be installed in the plenum. The back-flow damper assures that when either unit is operated by itself, the hot air will flow into the home, and not back through the other furnace. Depending on your installation (see figures examples below), a back-flow damper may be required in each plenum.

CANADA; The installation in parallel i.e. the Max Caddy furnace combined with another, using the same system of hot air ducts is not allowed in Canada.

UNITED STATES; The installation in parallel i.e. the Max Caddy furnace combined with another, using the same hot air duct system is allowed the United States.

0045- Appendix D5 (page 28 of 80)

Conditional to;

- The maximum input power of the existing gas, oil or electric furnace should be equal or lower than 120 000 Btu/h.
- The clearances required for wood furnace must be respected.
- The clearances between the hot air ducts and combustible materials must meet the highest values between the two furnaces.
- The necessary adjustments are made to the furnace or hot air ducts to maintain a static pressure of between 0.20 and 0.50 IN.W.C.
- A backflow damper must be installed to prevent air return in one or the other of the two furnaces and to ensure that hot air will flow into the house and will not return through the plenum of the other furnace. Depending on your system configuration, it is possible that more than one register is required to prevent air returns in the different hot air ducts (see examples below).

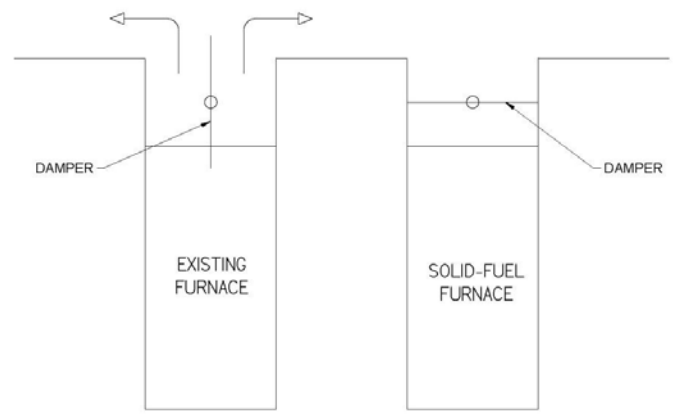

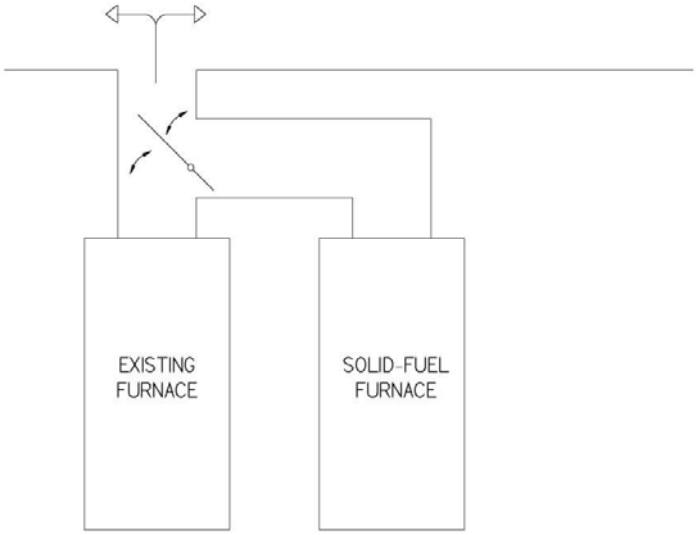

0045- Appendix D5 (page 29 of 80)

To ensure a safe installation, the two furnaces must not, at any time, run simultaneously. To do so, the thermostat controlling the existing furnace must be connected to your Max Caddy link board. This way, when a heating signal is sent to the existing furnace, the Max Caddy receives the same signal. It will tell the Max Caddy to either not start or, to go into a shut down cycle, if the furnace was already heating when the demand for heat was sent.

The wiring for an Add-on installation is shown below. The existing furnace's thermostat must be connected to the **Rh** and **Aux** terminals of the link board on the Max Caddy furnace. Those two wires must come from the **R** and **W** terminals of the existing furnace's thermostat so the link board receives the heat signal.

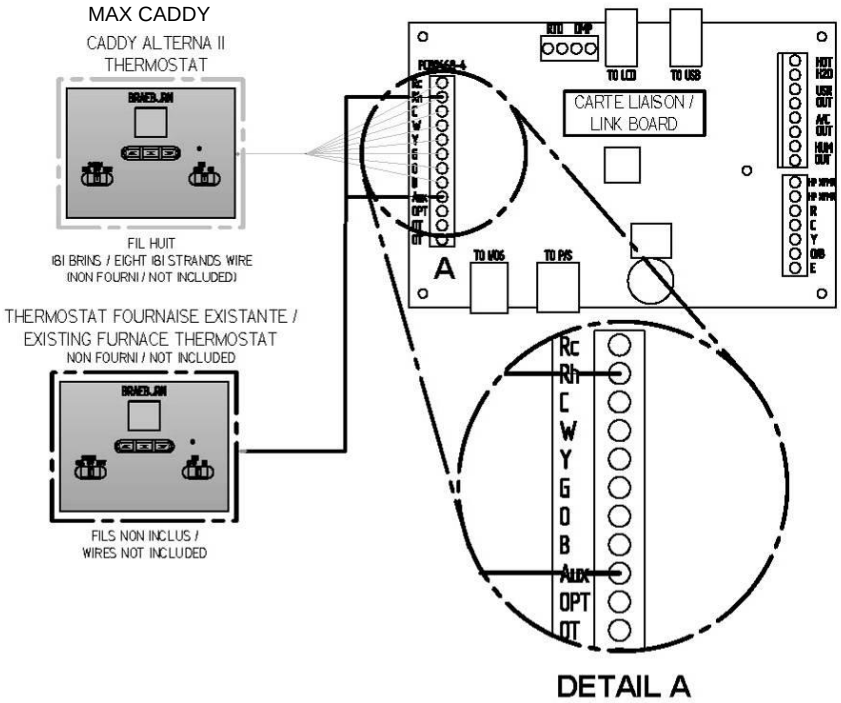

When a heat signal from the existing furnace's thermostat will be sent, the Max Caddy furnace will shut itself down and an envelope will appear on the LCD screen indicating that the existing furnace has taken over. This envelope will disappear when the heat signal of the existing furnace's thermostat will stop and the Max Caddy furnace will resume getting orders from its own thermostat.

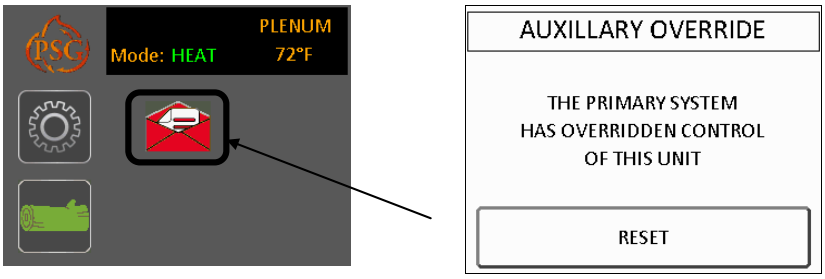

28

0045- Appendix D5 (page 30 of 80)

9.14. ELECTRICAL ELEMENT INSTALLATION (OPTIONAL)

9.14.1. INTRODUCTION

Two electrical elements are available for the Max Caddy: and 20Kw et 25kW. These options include all components necessary for the installation. Instructions for installing the electrical elements are provided with the electrical element.

WARNING: USE WIRING SUITABLE FOR 75 °C (NOT INCLUDED).

9.14.2. CONNECTING THE ELECTRICAL ELEMENT

MODEL	THEORETICAL OUTPUT	TEMP. VAR. (° F)	BTU/HR	AMPS TOTAL	BREAKER REQUIRED	FEEDER GAUGE	VOLTAGE SINGLE PHASE	ELEMENTS QTY
20 kW	2,100	75	68,240	85	125 amps	3	120/240	4 x 5 kW
25 kW	2,100	85	85,325	100	150 amps	2	120/240	5 x 5 kW
WOOD	2,100	100	180,000	5	15 amps	14	120	N/A

Electrical connections must conform to the wiring diagram supplied with the option.

The electrical element must be connected to the power board (See Section 17 - ELECTRICAL DIAGRAM FOR ELECTRIC UNIT). For security reasons, the electrical element has a manual reset thermostatic sensor that is located inside the electrical unit. If the temperature of the electric unit exceeds the high limit, the thermostatic sensor will disengage the elements. After finding and fixing the problem that has caused the unit to overheat (static pressure too high, fan breakdown, etc.), reactivate by pressing the red “manual reset” button on the thermostatic sensor (L-170 thermodisc).

INSIDE VIEW OF ELECTRIC ELEMENT

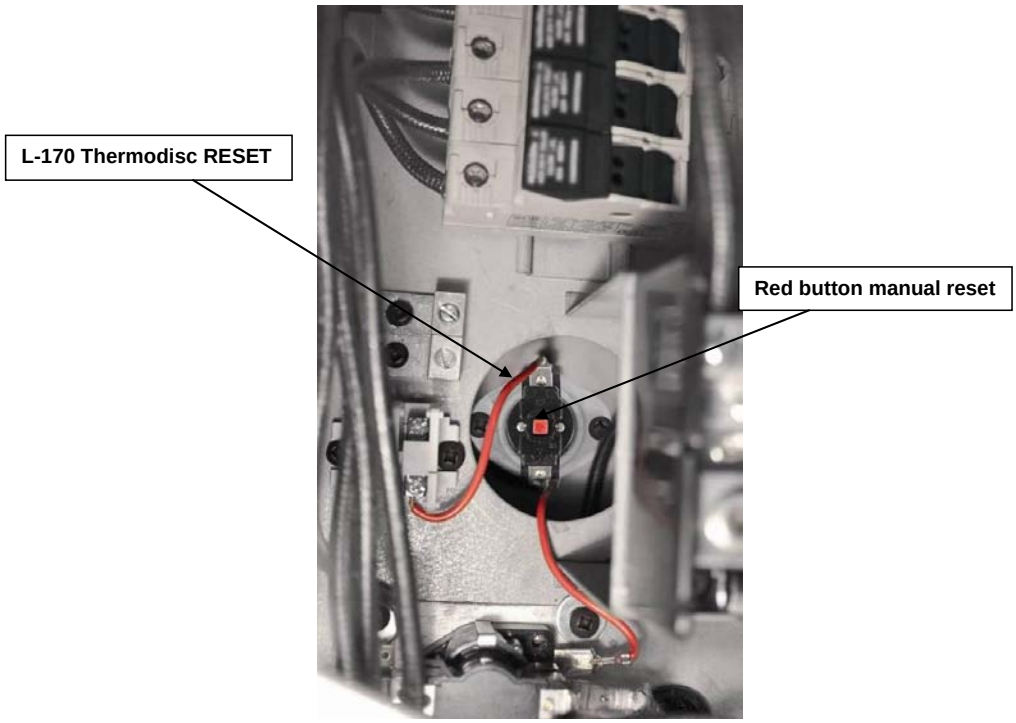

29

0045- Appendix D5 (page 31 of 80)

10. THERMOSTAT INSTALLATION

10.1. WOOD FURNACE ONLY

The furnace must be connected to a thermostat. You can use the one provided with the unit or use one that is already installed in your home. The thermostat must be installed on an inside wall and located where it is not likely to be affected by the draft coming from an air outlet. It must be installed at a minimum of 55 inches (140cm) above the floor.

It is recommended to connect the thermostat to the furnace with a seven or eight threads wire connecting terminals Rc, Rh (connect only one of the two terminal R if there is a jumper between Rc and Rh in the thermostat), C, W, Y, G, O and B. If the thermostat is using a dry contact (powered by batteries), it is not necessary to connect the C (common) terminal to the thermostat. Refer to the electrical diagram.

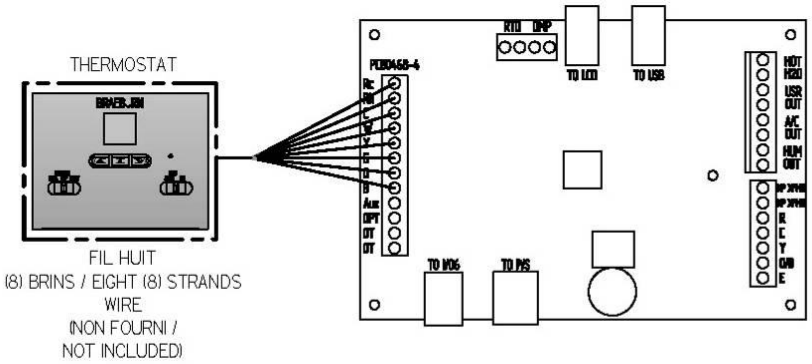

Once wired to the furnace, it is possible to verify the signals coming from the wall thermostat. Simply go on the touch screen main menu, under the "TROUBLESHOOT LINK" menu and going to page 1 as shown below. When a signal is sent from the thermostat, the circle corresponding to the signal should appear green.

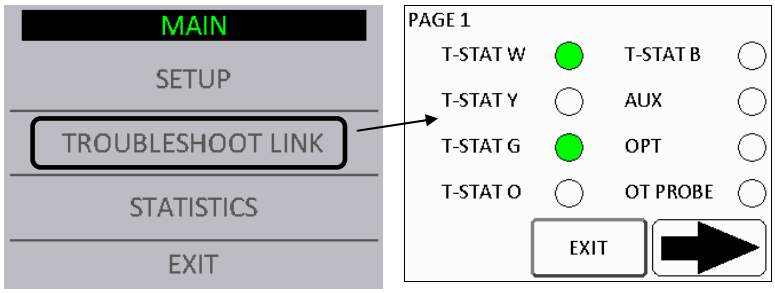

10.1.1. COMBINATION WOOD-ELECTRIC OR WOOD-OIL FURNACE

Only one thermostat is necessary to control the wood furnace and any other auxiliary heating source. Installing the thermostat is done the same way as if the furnace was wood only. See Section 11.4.1 - TRANSITION TO AN AUXILIARY HEAT SOURCE to learn how to make it work.

10.1.2. COMBINATION WOOD-ELECTRIC-OIL

Only one thermostat is necessary to control the wood furnace and any other auxiliary heating source. Installing the thermostat is done the same way as if the furnace was wood only. See Section 11.4.1 - TRANSITION TO AN AUXILIARY HEAT SOURCE to learn how to make it work.

0045- Appendix D5 (page 32 of 80)

10.2. INSTALLATION OF AN AIR CONDITIONING UNIT

The Max Caddy furnace has been tested with an optional air conditioning unit. If this option is chosen, we recommend an installation as per the graphic provided below.

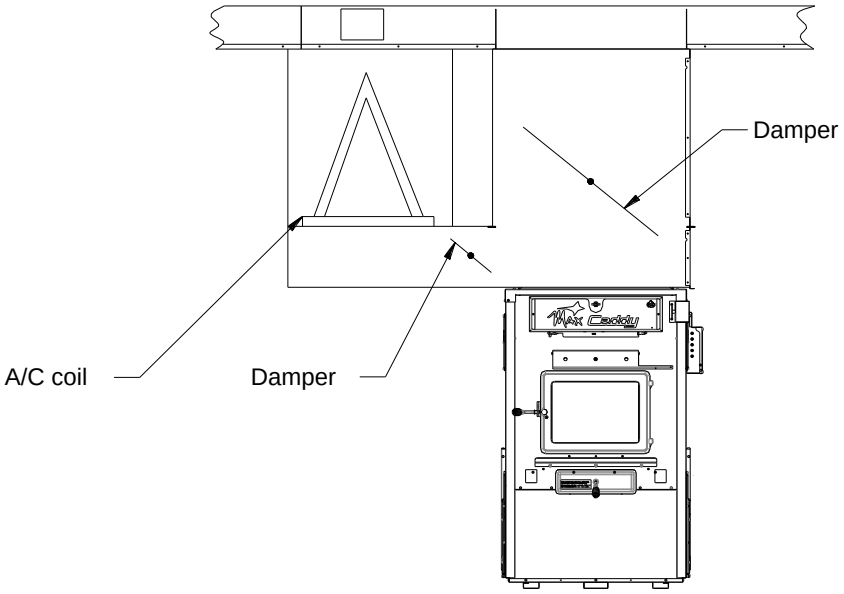

This installation will provide the most efficient and safe operation of the air conditioning unit using the distribution blower of the Max Caddy furnace during summer. In order to complete the installation of an air conditioning unit, the main thermostat must be a “heat/cool” type. Furthermore, the desired distribution blower speed must be programmed on the touch screen in the blower speed menu. (See Section 11.5 DISTRIBUTION BLOWER SPEED CONFIGURATION

It must be noted that upon thermostatic demand for cooling, the distribution blower will start immediately at the programmed speed. For the air conditioning damper wiring see Section 28 - LINK BOARD OPTIONS CONNECTIONS.

The capacity and characteristics of the air conditioning unit that has been tested with the MAX Caddy are stated below. The use of another brand with similar capacity and characteristics is adequate.

Condenser brand: Goodman GSX13048
Capacity: 4 ton
Coil type: Type A, CAUF uncased indoor coil.

10.3. HEATPUMP INSTALLATION

It is possible to pair a heat pump to the Max Caddy. To determine the priority of operation of these two modes of heating, you must go to Section 11.4.3 **-** AUXILIARY HEAT SOURCE PRIORITIZATION.

For connection of the heat pump to your furnace, see Section 28.7 - HEAT PUMP

Note: If a heat pump is connected to the Max Caddy, the electrical element must be installed to ensure an auxiliary heat source. (PA08535 (20kW), PA08545 (25kW)

For installation of air conditioning coil, refer to Section 10.2 - INSTALLATION OF AN AIR CONDITIONING UNIT.

0045- Appendix D5 (page 33 of 80)

10.4. INSTALLATION OF A DOMESTIC WATER PRE-HEATING SYSTEM OR A HUMIDIFIER

A water heating loop option is also available to pre-heat domestic water using the energy produced by the Max Caddy wood furnace. This water loop kit will be inserted between the wood combustion chamber and the heat exchangers. When heating with wood, the heat from the furnace will pre-heat domestic water that will be stored in a feed tank before entering your existing water heater. Removable panels are installed on both sides of the furnace for quick and easy installation of the loop. A 24 volt solenoid valve must be installed at the inlet of the loop and must be connected to the HOT H_20 terminal on the PC board; when the plenum temperature reaches 120°F, the valve opens to allow water circulation. It closes when the temperature drops below 100°F to prevent overcooling the combustion chamber during low firing rates. See section 28.3 - HOT WATER for electrical connection. Complete installation and operation instructions for the hot water loop kit are supplied with the kit.

NOTE : NEVER INSTALL AN AUTOMATIC FEEDER.

The HUM OUT terminal may also be used to activate the 24 volt relay of a humidifier installed in the system which, when connected to the PC Board, will be activated and deactivated at the same temperatures as the water solenoid valve (120°F et 100°F). See section 28.6 - HUMIDIFIER for electrical connections.

To verify the status (open or closed) of the valve/relay, see section 14.1 - VALIDATING STATUS OF A COMPONENT.

11. CONFIGURATION AND OPERATING INSTRUCTIONS

11.1. CONTROLS SYSTEM

The Max Caddy has a sophisticated electronic control. This system is more versatile. All connections are made from the control panel. Terminal blocks are provided for all components and options.

Before you configure your system and learn how to operate it, make sure that your wall thermostat is wired correctly to your furnace, that the temperature probe (RTD) is well installed in the hot air plenum and connected to the link board and that your air distribution system is complete.

The furnace uses a touch screen, the latest technology in control devices. Blowers, power supplies and options are controlled from this screen.

It is important to note that your furnace is equipped with three main electronic components: the link board, the power board and the touch screen. The power board is already installed in the blower box.

The power board is used to supply current to the different electrical components, in particular:

- Supply current to the different electronic boards;
- Supply current to the distribution fan;
- Supply current to the sequencers of the electrical unit (optional);
- Supply current to the oil burner.

The link board is used more precisely for:

- Connecting the hot air plenum's temperature probe (RTD type);
- Connecting the wall thermostat;
- Connecting complementary equipments;
- Connecting a heat pump.

The LCD touch screen is used to operate the system. More precisely for:

- Choosing the combustion parameters;
- Selecting the options used;
- Show the temperature in the hot air plenum;
- Selecting heating priority;
- Selecting language and units displayed;
- Viewing statistics;
- Selecting distribution fan speeds;
- Troubleshooting to detect problems with the appliance.

0045- Appendix D5 (page 34 of 80)

11.2. SYSTEM CONFIGURATION

Once the installation is complete and before using the unit, the furnace should be configured to activate all applicable functions depending on options chosen. To do this, it is important to know which options are installed on your furnace.

11.3. TOUCH SCREEN

The LCD control is an electronic visual display as well as a touch screen that will light-up as you touch any location on the display area. The main status page will then display different icons layout depending if the furnace is on or not.

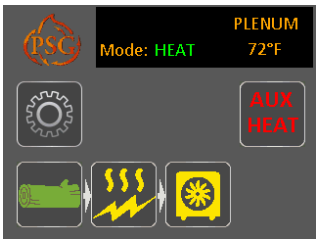

Main menu – Furnace « ON »

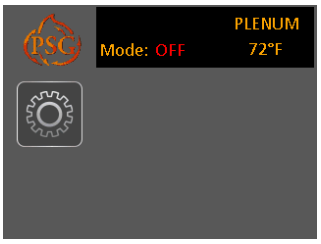

Main menu – Furnace « OFF »

11.3.1. ICONS DESCRIPTION

Icons	Description	Icons	Description
	Wood heating Green : Heating mode Yellow : Auxiliary heating mode		Electrical Element Green : Unit on Yellow : On hold
	Heat pump Green : Unit on Yellow : On hold		Oil unit Green : Unit on Yellow : On hold
	Settings		Displayed when an auxiliary heat source has been selected.
	Temperature in the hot air plenum		Distribution blower is in circulation mode. (CIRC)
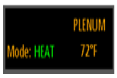	Possible states of the furnace: HEAT: When the word HEAT is green, the furnace is in heating mode. If the furnace is waiting for a demand for heating, the word HEAT is written in yellow. COOL: When the word COOL is green, the furnace is in cooling mode. If the furnace is waiting for a demand for cooling, the word COOL will be written in yellow. OFF: The furnace is stopped.		

0045- Appendix D5 (page 35 of 80)

11.3.2. LANGUAGE SELECTION AND TEMPERATURE UNIT

To choose the language and temperature unit, press the "Settings" button. In the "Main" menu, choose "SETUP" and then "GENERAL". Choose the preferred language and temperature unit.

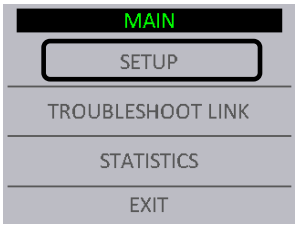

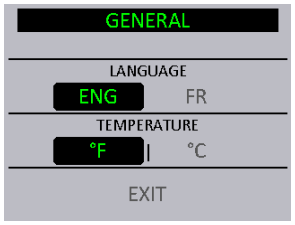

11.4. ADDING AUXILIARY HEATING SOURCE AND SELECTION OF OPTIONS

To add an auxiliary source of heating or to add options to your furnace, press the "Settings" button. On the “MAIN” page, choose “SETUP” and “OPTIONS”.

By default, no auxiliary source of heating or options are selected. To select an option, simply press the white square to the left of the desired option. When an option is chosen, the selected square turns green.

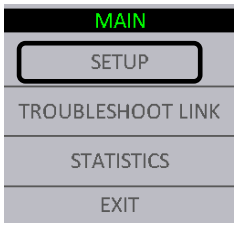

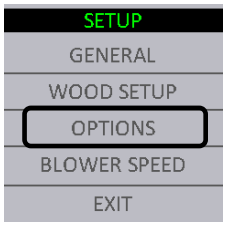

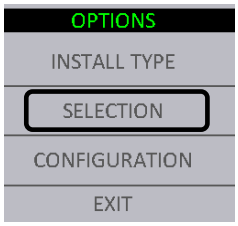

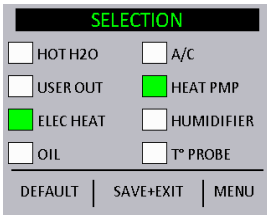

To confirm the selection of your options, press the button " SAVE + EXIT ". This step takes you to a list of questions about your selections that are essential for their good functioning.

11.4.1. TRANSITION TO AN AUXILIARY HEAT SOURCE

When there is a demand for heat, the furnace checks the temperature in the plenum. If the temperature is beyond the KIP, the fan will turn on. If the temperature is below the KIP, the furnace will wait the "Rise Time" delay and check the temperature again in the plenum. If the temperature in the plenum goes up 20°F but has not reached the KIP, the furnace will wait for additional time ("KIP Time") and recheck the temperature in the plenum. If the temperature has not reached the KIP, the auxiliary heating will start. The icon "Wood" will turn yellow and the auxiliary heat icon will turn green.

For the electrical element and/or the oil unit, the fan starts as soon as the thermostat asks for heat. In other words, for safety reasons, the fan does not wait for the hot air plenum to reach a predetermined minimum temperature.

The furnace remembers what heating source was used in the last request of the thermostat. If the last heating demand was met by the auxiliary heater, the furnace automatically start this one.

To restart the furnace using the wood mode, go on the touch screen on the main page and press on the wood icon. The icon will become green and the auxiliary heating source icon will become yellow.

11.4.2. TRANSITION SETTINGS

It is possible to slightly adjust the transition settings from the wood option to the auxiliary source of heating. To do this, go to the "MAIN" page on the touch screen under the "SETUP" option and choose "WOOD SETUP ". On this page, you can change the KIP, KOP, the Rise Time and KIP Time.

KIP (Kick-In point): Temperature of the plenum where the fan turns on.

KOP (Kick-Out point): Temperature of the plenum when the fan stops.

Rise Time: Time allowed for plenum temperature to increase by 20 ° F.

KIP Time: Additional time allowed to reach the KIP when the Rise Time ended with an increase of 20°F.

0045- Appendix D5 (page 36 of 80)

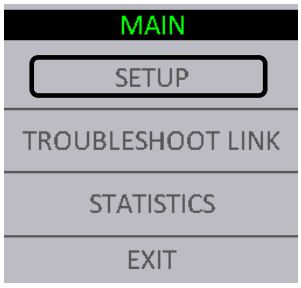

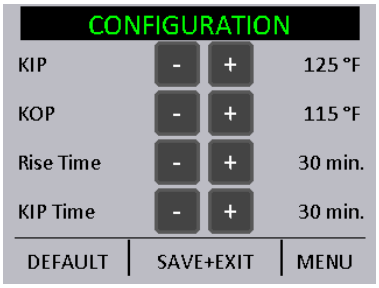

11.4.3. AUXILIARY HEAT SOURCE PRIORITIZATION

If you have configured one or many auxiliary heating sources (electrical element, heat pump, oil), you must choose the priority order when there is a heating demand. If, for example, the wood no longer provides sufficient heat, the auxiliary heating selected in priority one will take over. If priority one no longer provides enough heat, or does not provide it fast enough, priority 2 will take over. Heating priorities are chosen in the "MAIN" menu, under the "SETUP" option. Select "OPTIONS" and "CONFIGURATION". Use the arrows to select the priority order.

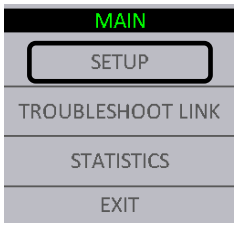

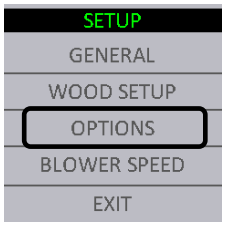

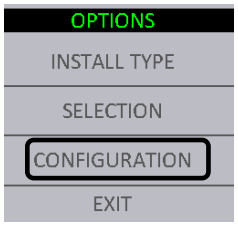

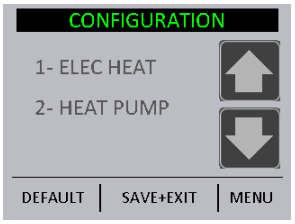

11.4.4. EXTERNAL TEMPERATURE PROBE

It is possible to connect an external temperature probe on the Max Caddy. This temperature probe is used primarily to reduce electricity consumption and reduce the bill by prioritizing the transition to an auxiliary heating source when it is too cold outside or when it is the overcharging billing period (peak usage) depending on the electricity supplier.

HEAT PUMP : With a combination wood, electrical component and heat pump you can set your temperature probe to not use your heat pump when it is too cold and the coefficient of performance becomes too low. (Electrical element should be prioritize during configuration the outdoor temperature probe.)

When the temperature probe is functioning, the « ECO » mode will show on the main page.

11.4.4.1. "BI-ENERGY" FUNCTION

The bi-energy function is used when a local utility company (Hydro-Quebec for instance) offers a bi-energy program under which a preferential rate is given, provided that the appliance is equipped with an electronic control that guaranties the use of a particular source of energy (ex: electricity) based on a given criterion (ex: the outdoor temperature).

When the MAX Caddy is programmed for bi-energy, the temperature probe (normally open contact) is connected to the PC board (See Section 28.2 - OUTDOOR PROBE). The contact remains open for as long as the outside temperature is above a certain value (this reference value is programmed into the system provided by the utility company). As long as the contact remains open, the electrical unit supplies the heat when the wood is not able to satisfy the thermostatic demand. If, however, the outside temperature reaches a level below the reference value, the contact closes and the oil unit is used as the option for heat if the wood is not able to satisfy the thermostatic demand.

0045- Appendix D5 (page 37 of 80)

11.5. DISTRIBUTION BLOWER SPEED CONFIGURATION

It is possible to adjust the speed of the distribution blower for circulation mode, air conditioning and any other mode of auxiliary heaters.

NOTE: When heating with wood, the fan distribution speeds are programmed in order to provide the best thermal exchange and cannot be changed.

It is possible to adjust the blower speed in “CIRCULATION” mode at any time by going in the main menu under “CONFIGURATION” and “BLOWER SPEED”.

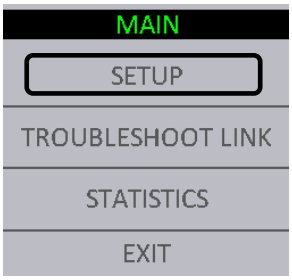

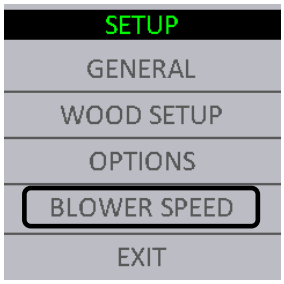

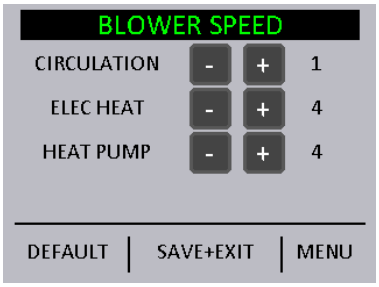

The blower speed adjustments for auxiliary heating are available only if the option was activated. The selected speed in this menu will be the speeds used in the "CIRC", "COOL" and "HEAT" mode.

The adjustment of all controls must be done by a qualified technician. The controls settings and the blower speed must conform to the recommendations of the CMMTQ.

11.5.1. DISTRIBUTION FAN SPEEDS

Your furnace is equipped with a 4-speed blower. Using the central processing unit, we have created 6 functional speeds. Refer to the following table for the various speed configurations.

Functional Speed	Corresponding data	CFM*	Static pressure
1	Blower speed #1 using 98V	600	0.2" H_2O
2	Blower speed #1 using 115V	760	0.2" H_2O
3	Blower speed #2 using 98V	840	0.2" H_2O
4	Blower speed #2 using 115V	950	0.2" H_2O
5	Blower speed #3 using 115V	1150	0.2" H_2O
6	Blower speed #4 using 115V	1260	0.2" H_2O

*These results were measured at exit of plenum during laboratory tests. Results may vary depending of the configuration and installation.

11.6. SYSTEM BALANCING

It is important to call upon a professional installer for the installation of the furnace and the ducting system configuration. Certain check-ups must be performed and certain rules must be respected in order not to damage the blower.

When all components are installed on the furnace and the ducting system is connected to the various rooms of the house, you must balance the ducting system. In order to do so, start the distribution blower by going in the ‘’TROUBLESHOOT LINK’’ menu on Page 5 and select speed #4.

0045- Appendix D5 (page 38 of 80)

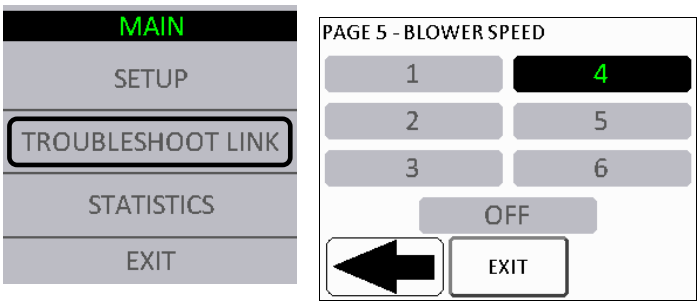

It is important to respect the velocity in the main duct, the secondary ducts, as well as the velocity at the room outlets. The static pressure of your system must be adjusted to at least 0.2 IN.W.C. and must not exceed 0.5 IN.W.C. Finally, make sure that you never exceed the maximum blower current.

11.7. OPERATING INSTRUCTIONS

11.7.1. HEAT Mode

When the temperature in your house is below the value at which your wall thermostat is programmed, a signal is sent to your furnace through the PC board, activating the motorized damper located in front of the furnace and thus allowing more oxygen to the fire. The RTD temperature probe, located inside the hot air plenum of your furnace, reads the plenum temperature continuously. When the temperature reaches the start-up value selected by the user (KIP – *Kick-in Point*), the distribution blower starts functioning at the minimum speed. Thereafter, the blower increments its speed until it reaches the best efficiency point (BEP) determined by the manufacturer. If the temperature inside the hot air plenum exceeds the limit determined by the manufacturer, the blower automatically selects the maximal speed and the motorized damper closes in order to slow down combustion. When the temperature returns to a safe level, the blower speed gradually returns to the speed required to maintain the BEP.

11.7.2. COOL Mode

If an air conditioning unit is installed, the PC board will have to be connected to a dual-function wall thermostat (e.g. “heat/cool”) in order to synchronize the start of the furnace blower with the start of the air conditioning condenser. Upon receiving the wall thermostat’s signal, the furnace blower will start functioning at the speed selected by the user.

11.7.3. CIRC Mode (air circulation)

This mode is used to circulate air during summer. Thus you will benefit from your ducting system to circulate fresh air from your basement throughout the house. To activate the circulation mode, put the thermostat in FAN-ON mode.

0045- Appendix D5 (page 39 of 80)

11.8. WOOD HEATING

11.8.1. LIGHTING

1. Open the furnace door

   Note: If there is already a bed of coals in the firebox, go to pre-heating.

2. Place one or two dry kindlings at the front of the furnace.
3. Place newspaper strips on top of the kindlings.
4. Cover the newspaper with more kindlings and small pieces of dry wood.
5. Add newspaper strips, then light the fire a low as possible and leave the door 1/2" (13 mm) opened. If you fail lighting the fire, you might experience a back draft through the air inlets.

11.8.2. PREHEATING

1. Once the kindling is well ignited or the coals revived, put 2 or 3 fire logs in such a way that the flames can interlace between the logs. Then, close the door. It is important to respect these loading sequences so that the wood will burn from the front to the back of the furnace.
2. Wait 15 to 20 minutes, then proceed with loading the furnace.

11.8.3. HEATING

1. When loading the furnace, lower the kindled pieces of wood and place them at the center of the combustion chamber before adding new logs.
2. Do not overload. Air must circulate freely in the upper part of the combustion chamber in order to obtain an efficient operation of the appliance (secondary burn). Please note that a small hot fire will produce much less residues than a large, smouldering one.

IMPORTANT: DURING THE HEATING PROCESS, REMOVE THE ASHES AND WOOD THAT COULD OBSTRUCT THE 1/4" (6.4 mm) HOLE (PILOT) LOCATED BELOW THE DOOR, INSIDE THE FURNACE'S COMBUSTION CHAMBER.

PROCEDURE TO OPEN THE LOADING DOOR

TO MINIMIZE THE RISK OF SMOKE SPILLAGE, OPEN THE DOOR 1"
AND WAIT ABOUT 10 SECONDS BEFORE OPENING IT COMPLETELY.
THE PURPOSE IS TO STABILIZE THE PRESSURE INSIDE THE FURNACE.

11.8.4. EARLY SIGNS OF AN OVERFIRED FURNACE:

- Roaring fire.
- Chimney connector is glowing red.
- Extreme heat coming from the furnace. If this occurs, **DO NOT OPEN THE DOOR**. Shut-off the air inlet opening completely, and wait until the glow has completely subsided.

ALWAYS KEEP THE DOOR AND THE ASH DRAWER CLOSED
(except for lighting and maintenance).

0045- Appendix D5 (page 40 of 80)

11.8.5. WOOD AS HEATING FUEL

ATTENTION

NE JAMAIS FAIRE BRÛLER DE DÉCHETS, DE LA GAZOLINE, DU NAPHTA, DE L'HUILE À MOTEUR OU TOUT AUTRE PRODUIT SEMBLABLE.

We recommend that you burn dry hard wood only.

There are two important factors to be considered when choosing a type of wood: the moisture content and the wood density. Hardwood, oak and beech for example, will provide better results because of the high density and minimal tar produced during combustion. It is highly recommended to use wood that has been dried for at least six months.

DO NOT USE COAL AS HEATING FUEL IN THIS APPLIANCE.

Whenever a high rate of smoke is noticed in the room, you must:

1. Open doors and windows.
2. Make sure the furnace door is closed as well as the damper (if necessary, lower the thermostat starting point or unhook the damper chain and close the barometric draft control manually).
3. When the furnace has cooled down, inspect the chimney to detect obstructions and consult a specialist to determine the cause of the smoke spillage.

11.8.6. PROLONGED POWER FAILURE

In case of prolonged power failure (over 10 minutes), to reduce the risk of overheating, it is recommended to heat moderately and to open the furnace filter compartment in order to facilitate air circulation by natural gravity around the firebox of the Max Caddy wood furnace.

11.8.7. CHIMNEY FIRES

This might occur when the fire gets extremely hot. Burning cardboard, branches, or small pieces of wood can ignite the creosote residue accumulated in the evacuation flue system. The usual signs are:

1. Rumbling.
2. The flue gets extremely hot (red).
3. Flames or sparks are coming out of the chimney.
4. In case of a chimney fire, call your local fire department immediately and sprinkle the roof around the chimney with water.

Make sure that the furnace door is closed as well as the damper (if necessary, lower the thermostat starting point or release the chain from the damper and close the barometric draft control manually).

If the fire gets uncontrollable due to an improper use or because the draft is too strong, follow the same procedure as in a chimney fire except that you will have to **OPEN** the barometric draft control manually.

11.8.8. LOCAL FIRE DEPARTMENT

Phone number: _____

0045- Appendix D5 (page 41 of 80)

12. MAINTENANCE

12.1. MAINTENANCE OF THE EXCHANGERS

Heat exchangers must be cleaned thoroughly at the end of every heating season. During summer, the air in basements is damper and with minimal air circulation within the furnace, it can mix with creosote and/or sooth deposits in the exchangers to form an acid that could accelerate the corrosion process and induce premature decay of the steel. Corrosion damages are not covered under warranty.

Smoke pipe and exchangers must be inspected regularly during the heating season. Access to the exchangers is easy and does not require tools; just remove the decorative facing by just lifting it, remove the wing nut that keeps the hinged access panel closed. (See pictures below)

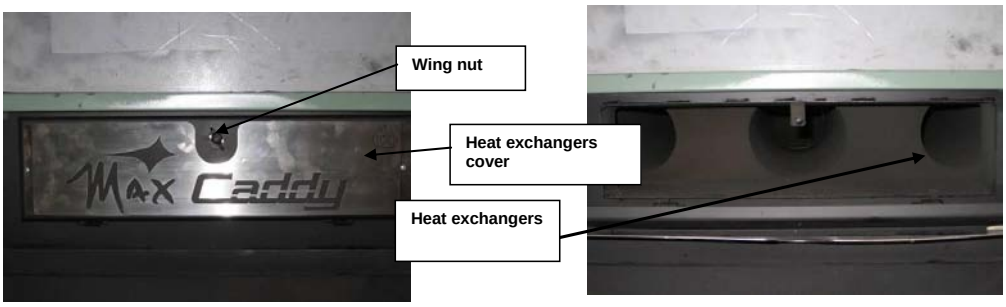

Before cleaning the three exchanger pipes, move the upper vermiculite baffle board of the combustion chamber forward (see drawing on next page). Using the scraper, clean the three exchanger pipes. The accumulated dirt in the lateral exchangers will fall into the combustion chamber; the dirt in the central exchanger will have to be removed from the front or the back of the furnace. Then, ensure that the upper baffle board is free of ashes. **Do not forget to push the upper baffle board back to its original position.** Finally, close the exchanger access door.

Max Caddy section view

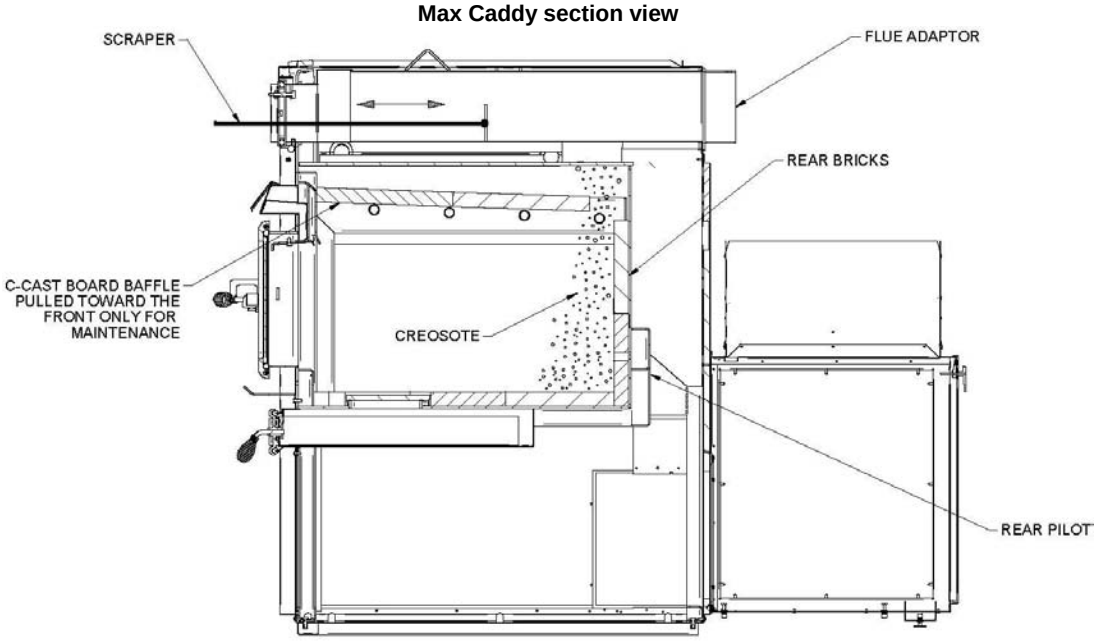

40

0045- Appendix D5 (page 42 of 80)

12.2. CHIMNEY MAINTENANCE

The most efficient way to sweep a chimney is to run a hard chimney sweeping brush. Brush from the top down so sooth and creosote deposits will detach from the chimney liner and fall down to the bottom of the chimney where it can be easily removed.

The chimney must be inspected regularly and any creosote build-up must be removed without delay. Monthly cleaning should be sufficient during cold winter months while more frequent cleaning could be required during milder periods.

12.3. SMOKE PIPE INSPECTION

- The smoke pipe must be inspected regularly during the heating season.
- The pipe must be examined carefully to detect any defect or damage.
- The pipe can be reassembled if no defect is detected and defective pipe must be replaced immediately.
- Burn wood only in this furnace.
- As a combustible, well seasoned hardwood in 18" to 22" logs works best
- Regularly, examine the flue pipes, the joints, and the sealing trims to ensure that the smoke and the combustion gases are not transported into the air ducting system.

12.4. BLOWER MOTOR MAINTENANCE

Periodic cleaning of the fan housing as well as fan and fan blades using a vacuum cleaner is necessary in order not to affect performance and cause overheating of the latter.

DO NOT OVERLUBRICATE.

12.5. FILTERS

Never use the furnace without air filters. To function as expected, controlled combustion wood burning appliance must be maintained on a regular basis. This means that the chimney, the gaskets and the pipes must be kept in good working order and the air filter cleaned or replaced regularly. Use the same size and type of filter as the original. High efficiency 2-ply, 3-ply, or 4-ply filters are recommended.

12.5.1. AIR FILTER DIMENSIONS

Max Caddy: 16" x 20" x 1" filter

12.6. DOOR GASKET MAINTENANCE

It is important to maintain the door gasket in good condition. After a while, the gasket might sag; a door adjustment may then be required. If the door adjustment is not sufficient, replace the door gasket with a genuine one.

12.6.1. DOOR ADJUSTMENT PROCEDURE

1. Unscrew completely the locking pin (see picture below).

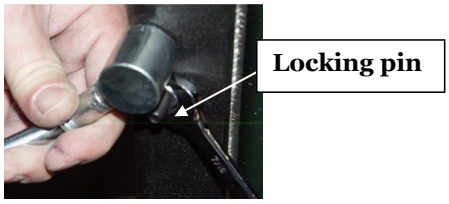

0045- Appendix D5 (page 43 of 80)

2. To increase the pressure of the door on the gasket, turn the handle counter clockwise; to decrease the pressure of the door on the gasket, turn the handle clockwise until desired pressure is attained.

3. Then, screw back the locking pin about 1/4" deep and make sure you lock it in place with the nut.

13. REPLACEMENT PARTS

Your PSG furnace is designed to burn clean and requires little maintenance. It is recommended to conduct a visual inspection at least once a month to uncover any damage to the unit. Any defect must be repaired without delay using genuine PSG replacement parts. You can find a complete list of replacement parts in section 29 - EXPLODED VIEW AND PART LIST or on our website at www.caddyfurnaces.com.

13.1. DOOR GLASS

- Inspect the glass regularly to detect any glass failure. If you find any defect, stop using the wood furnace immediately. Never operate a wood furnace with a broken glass.
- If you have to change your door glass, you must use Pyroceram 3/16" (5mm) thick. Use genuine parts sold by a PSG authorized dealer.
- To replace the glass, remove the screws that hold the glass retainers in place. Removed these retainers and replace the defective glass; the glass gasket should be replace at the same time. To put back in place, reverse the procedure.
- Do not use abrasive cleanser. Special cleansers for wood fireplaces glass are available in any good hardware store or specialty hearth retailer.
- Clean glass **ONLY** when the unit has cooled down.

13.2. GASKET

We recommend replacing the gasket that seals the door once a year, in order to maintain a good control of the combustion for maximum efficiency and security. To replace your door gasket, remove the old gasket and adhesive. Clean the surface thoroughly, apply a high-temp adhesive/silicone (650 ^{0}F) sold for that particular use, and put the new gasket onto the door. Wait for at least 4 hours before lighting your furnace.

14. TROUBLESHOOTING

When you have issues with your furnace, your first reaction may be to call technical support. This section will help you save time and money by enabling you to solve simple problems by yourself. Most common problems are generally caused by the following five factors:

1. Wrong operation or lack of maintenance;
2. Bad installation;
3. Poor quality combustible;
4. Component failure;
5. Factory defect.

The furnace is equipped with a pc board that allows the furnace to diagnose itself. It is thus important not to unplug the furnace if there is an issue with it. First, because unplugging the furnace will disable all the security features of the furnace, and second, because you will not be able to see the error code given by the furnace to understand what is the problem. It is thus important to read carefully this section before calling technical support.

The following sections will help you test each component individually and will also give you many tips in how to solve any problems related to a specific error code.

NOTE: IF YOU NEED TO CONTACT YOUR DEALER OR TECHNICAL SUPPORT, MAKE SURE TO HAVE THE MODEL OF YOUR APPLIANCE AND THE SERIAL NUMBER ON HAND. (THEY CAN BE FOUND ON THE CERTIFICATION LABEL ON THE SIDE OF THE FURNACE).

WARNING: RISK OF ELECTRIC SHOCK. IF YOU NEED TO MANUALY TEST, HANDLE OR REPLACE A COMPONENT, THE FURNACE MUST BE DISCONNECTED FROM ITS POWER SUPPLY.

0045- Appendix D5 (page 44 of 80)

14.1. VALIDATING STATUS OF A COMPONENT

When using your furnace, you can validate at any time, the status of any of the following components:

- Distribution blower
- Air damper
- Temperature probe (RTD)
- Hot water system
- Humidifier
- Heat pump

14.1.1. DISTRIBUTION BLOWER

To check the status of the distribution blower, go to the main menu under “TROUBLESHOOT LINK" then go to page 5. When the fan is on, the selected speed is black.

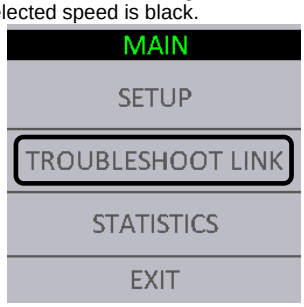

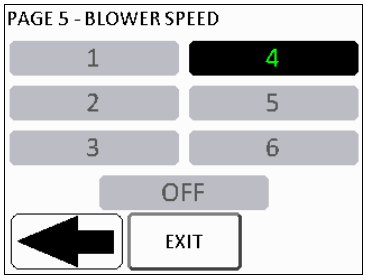

14.1.2. AIR DAMPER, HOT WATER AND HUMIDIFIER

To check the status of the air damper, hot water or humidifier, go to the main menu under "TROUBLESHOOT LINK" then go to page 3. When the furnace is in wood heating, the damper is open. The green square next to “DAMPER” should be on the left, (closed circuit). When another heating mode is on, the damper is closed, so the circuit is open and the green square is on the right. Same logic goes for the hot water and the humidifier.

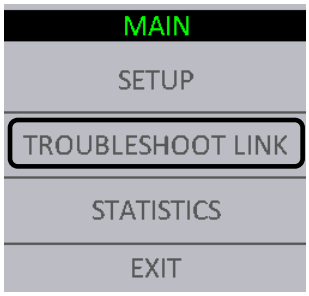

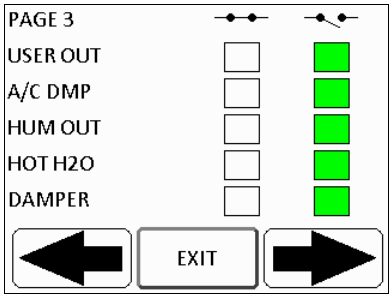

0045- Appendix D5 (page 45 of 80)

14.1.3. TEMPERATURE PROBE (RTD)

The temperature probe continuously reads the temperature in the plenum and displays it on the main page in the upper right corner. If the probe fails, the error message "PLENUM OVERTEMP" will appear. See section 14.2 - MAIN ERROR CODES, POSSIBLE CAUSES AND SOLUTIONS for more information.

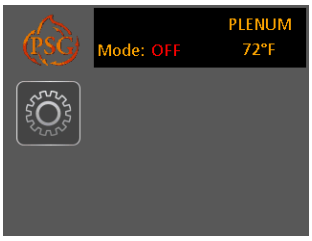

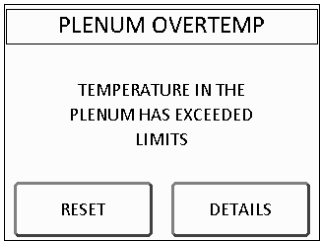

14.2. MAIN ERROR CODES, POSSIBLE CAUSES AND SOLUTIONS

This section contains main error codes, possible causes and many suggestions to guide you in resolving them. To go back to the main menu, press the RESET button.

NOTE: IF, AFTER PERFORMING ALL THE POSSIBLE SOLUTIONS MENTIONED IN THE FOLLOWING SECTION, YOU ARE STILL EXPERIENCING PROBLEMS WITH YOUR FURNACE, CALL YOUR LOCAL DEALER OR AFTER-SALE SERVICE.

NOTE: IF YOU NEED TO CONTACT YOUR DEALER OR TECHNICAL SUPPORT, MAKE SURE TO HAVE THE MODEL OF YOUR FURNACE AND THE SERIAL NUMBER ON HAND. (THEY CAN BE FOUND ON THE CERTIFICATION LABEL ON THE SIDE OF THE FURNACE).

14.2.1. UNIT OVERHEAT

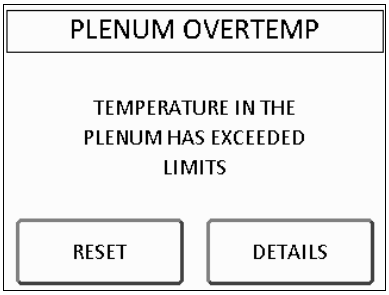

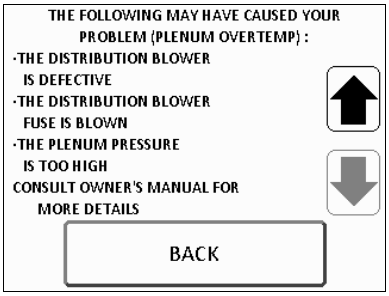

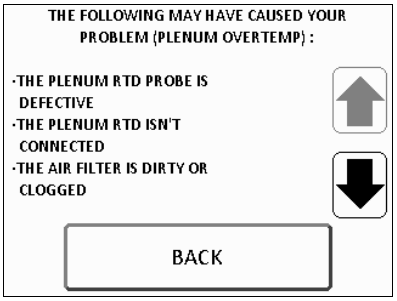

0045- Appendix D5 (page 46 of 80)

The temperature probe (RTD) is disconnected or defective: If the displayed plenum temperature on the touch screen is 0 ℉ or 1140 ℉, the temperature probe is either disconnected or defective. Check the probe connection (see Section 9.4 - HOT AIR PLENUM TEMPERATURE PROBE INSTALLATION AND CONNECTION (RTD) or replace if necessary.

The air filter is dirty or clogged: Clean the furnace filter. If the filter is damaged, replace it.

The distribution fan is faulty: Check the fan status. To do this, see Section 14.1.1 - DISTRIBUTION BLOWER. Replace it if necessary.

The fuse of the distribution fan is blown: Change the 12A fuse on the power board.

The pressure in the plenum is too high: Make sure your air distribution system is well balanced and that the filter is not dirty or clogged. Ensure that returns / side vents are not blocked.

14.2.2. NO HEAT

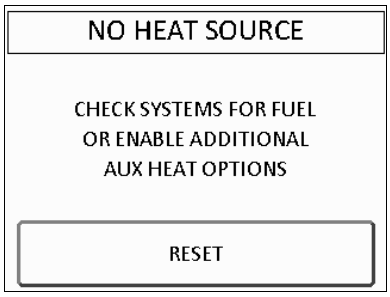

This message appears:

- When the wood furnace failed to raise the temperature in the plenum enough to reach the KIP or
- When the temperature does not reach 100 ℉ in the plenum in less than five minutes for auxiliary heat.

Make sure there is a fire in the furnace or the auxiliary heating sources are functional and well connected.

14.2.3. COMMUNICATION ERROR

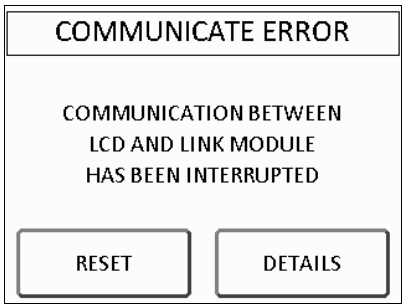

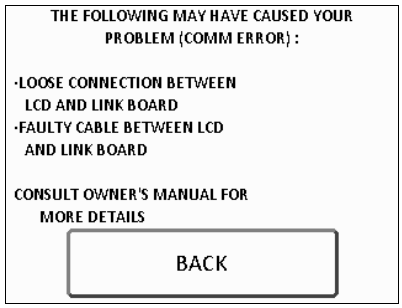

Communication error: The information from the touch screen cannot be read by the link board. It is possible that the telecommunication wire is not plugged in. Make sure each end of the wire makes good contact in the connector. It is also possible that the wire is damaged. In this case, replace it.

0045- Appendix D5 (page 47 of 80)

14.2.4. SMOKE SMELL

- **Venting system leaks.** Inspect all vent connections. All vent connector joints must be sealed and fastened in accordance with the vent manufacturer's instructions to ensure consistent performance and avoid smoke and ash spillage.

- **Worn gaskets.** Gaskets may be allowing smoke spillage (doors, clean out traps, etc). Make sure that all gaskets are in good condition and replace them with original parts if necessary. Make sure the door is well adjusted.

- **Negative pressure.** A faint wood-burning odor during ignition or shut down is normal. Although, if this increases beyond what is considered normal or if you notice an unusual soot build-up on walls or furniture, check your venting system carefully for leaks and make sure all gaskets are in good condition. The furnace blower produces a negative pressure in the room. It draws air from the inside of the room, through the furnace and then outdoors. In the same manner, other appliances can also create a larger negative pressure. In this case, as the air naturally flows from a high pressure point to a low pressure point, a larger negative pressure can draw smoke from the inside of the furnace into the room. The furnace can also be affected by other mechanical ventilation systems, causing the same effect as mentioned previously. Using a fresh air intake will prevent negative pressure. Also, make sure the recommended maintenance schedule has been followed.

14.2.5. THE LCD TOUCH SCREEN DOES NOT LIGHTUP.

- **There is no electrical current going to the furnace.** Check if the furnace is connected and if there is current in the wall outlet. Check if the fuse is blown. Replace it if necessary.

- **TELCO wire is defective or not connected properly**.

- **The temperature of the screen is below zero**. When the screen is exposed to temperatures too cold, the liquid crystals may not function properly which causes a loss of communication. This situation may occur in cases where the unit has arrived from outside by a carrier or is subjected to a room temperature too low as in an unheated cottage or a very cold garage.

14.2.6. AUXILIARY OVERRIDE

This message appears when a heat signal from the existing furnace's thermostat is sent and the Max Caddy shuts itself down.

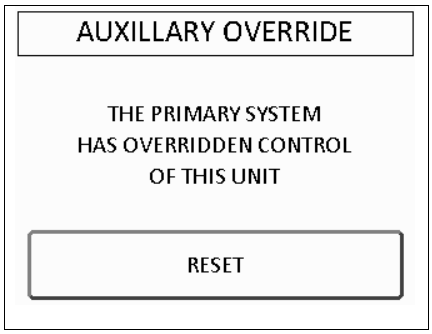

0045- Appendix D5 (page 48 of 80)

15. GENERAL ELECTRICAL DIAGRAM

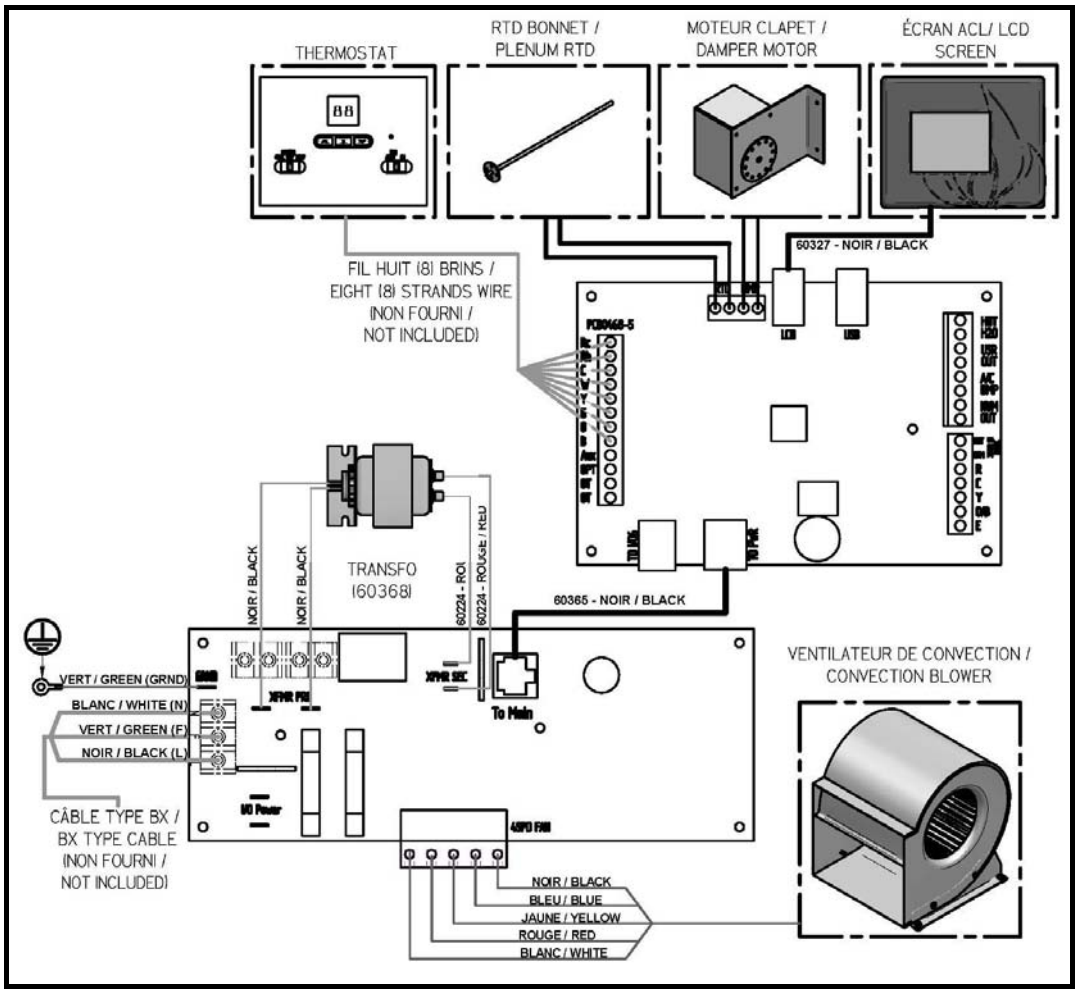

47

0045- Appendix D5 (page 49 of 80)

16. ELECTRICAL DIAGRAM FOR PARALLEL FURNACE

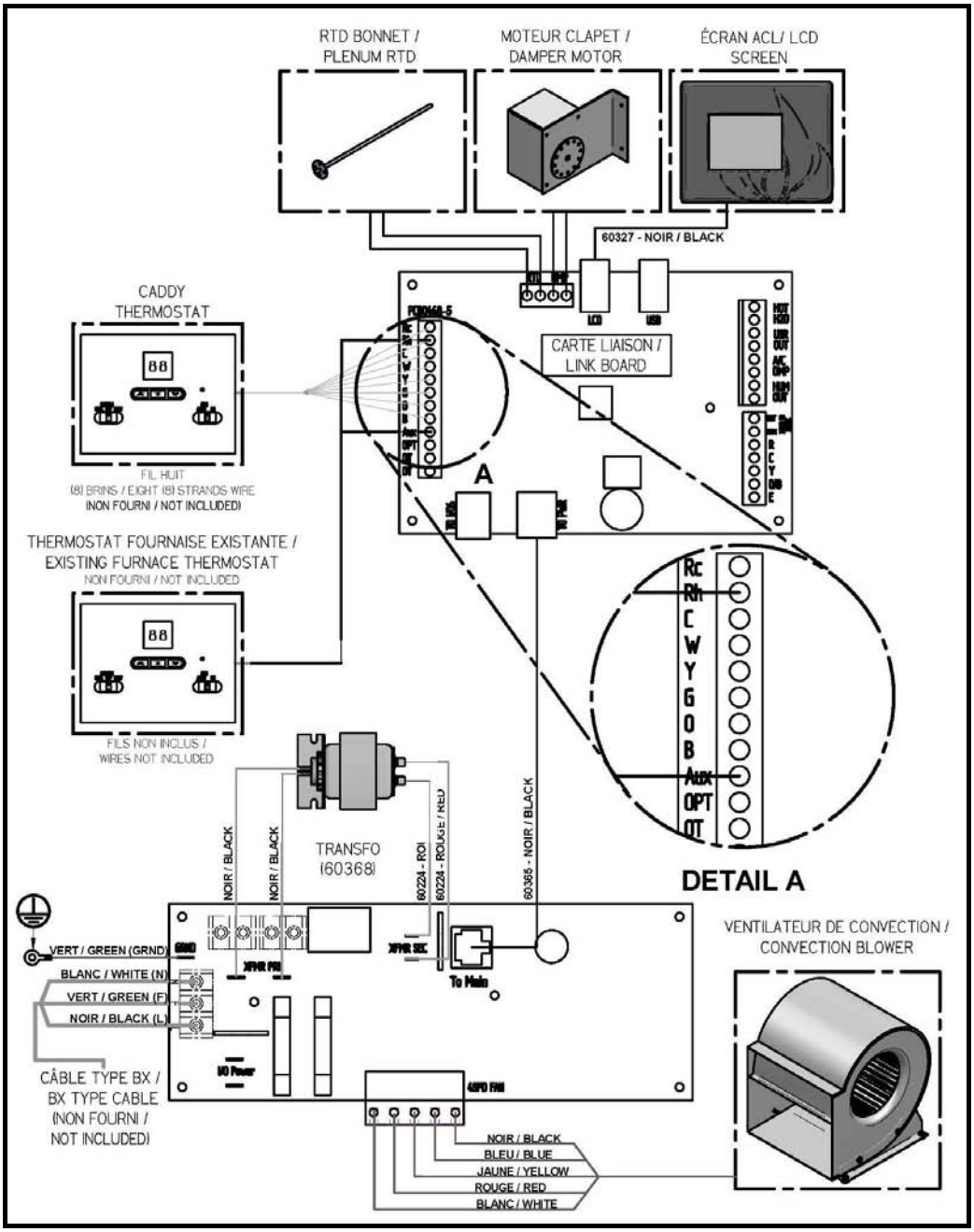

48

0045- Appendix D5 (page 50 of 80)

17. ELECTRICAL DIAGRAM FOR ELECTRIC UNIT

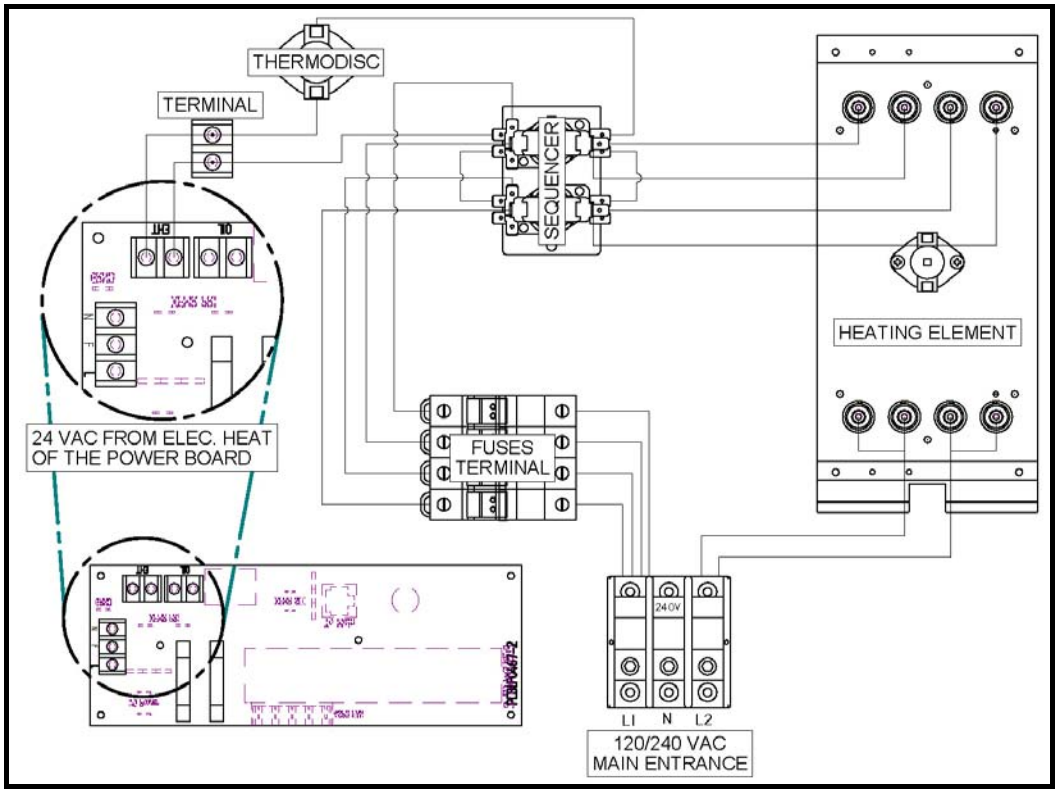

0045- Appendix D5 (page 51 of 80)

INSTALLATION AND OPERATION INSTRUCTIONS FOR

WOOD/OIL COMBINATION FURNACE

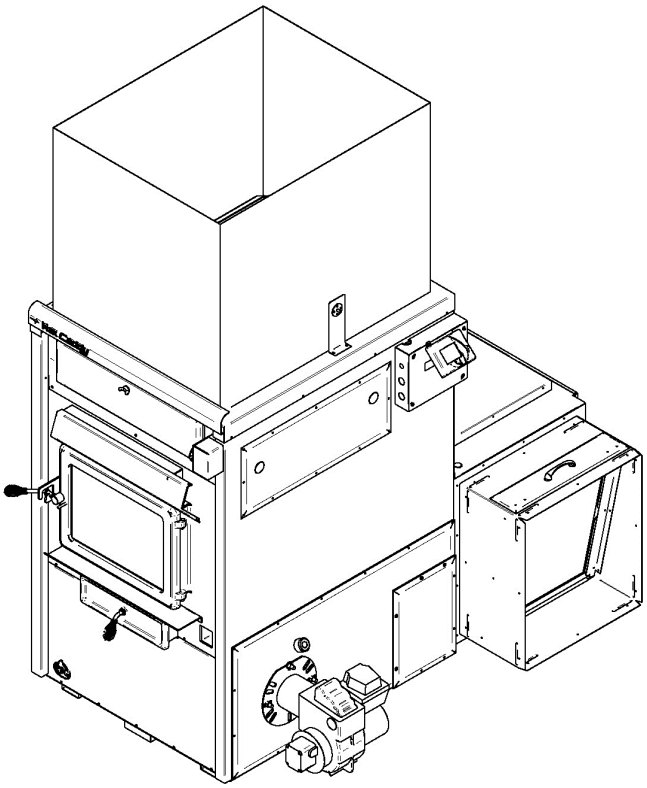

NECESSARY COMPONENTS FOR MAX CADDY WOOD/OIL COMBINATION FURNACE

To use the configuration of the Max Caddy wood/oil furnace you have to assemble the blower assembly (PA08566), sold separately. The assembly instructions are in the instruction manual supplied with the blower assembly kit.

You must also assemble the oil assembly kit. The assembly instructions are in the instruction manual supplied with the oil assembly kit (PA08512 or PA08513) sold separately.

0045- Appendix D5 (page 52 of 80)

GENERAL INFORMATION FOR OIL FURNACE

READ THIS MANUAL THOROUGHLY BEFORE OPERATING THE FURNACE

CAUTION	CAUTION
EXPLOSION OR FIRE HAZARD. FOR YOUR SAFETY: DO NOT STORE OR USE GASOLINE OR ANY FLAMMABLE LIQUIDS OR VAPORS IN THE VICINITY OF THIS HEATING UNIT.	DO NOT ATTEMPT TO LIGHT THE BURNER WHEN EXCESS OIL HAS ACCUMULATED, WHEN THE APPLIANCE IS FULL OF VAPOR, OR WHEN THE COMBUSTION CHAMBER IS VERY HOT.

DO NOT BURN WASTE OR PAPER IN THE APPLIANCE.

DO NOT LEAVE PAPER OR ANY COMBUSTIBLE MATERIAL AROUND THE APPLIANCE.

WARNING: INSTALL THE NOZZLE. ADJUST THE ELECTRODES. ADJUST PRESSION.

NOTE: IF A PROBLEM RESULTS FROM IMPROPER INSTALLATION, NO PRODUCT WARRANTY WILL BE VALID.

DO NOT TRY TO MODIFY THE UNIT OR ITS COMMANDS – CALL A TECHNICIAN.

PLEASE SAVE THIS DOCUMENT!

0045- Appendix D5 (page 53 of 80)

18. GENERAL NOTES

This instructions manual treats mainly of the oil burning unit of your wood/oil combination furnace.

To obtain the maximum efficiency out of your furnace, follow the advice below regarding the installation and operation of your WOOD/OIL combination furnace.

- Respect the local codes (when in doubt, consult your local dealer).
- Respect the clearances indicated on this instructions manual and make sure that they match those indicated on the appliance's certification label;
- Make sure that your furnace is installed in conformity with the instructions on the certification label;
- All the controls adjustments must be performed by a qualified technician.

WARNING

THE INSTALLATION OF THE WOOD/OIL COMBINATION FURNACE MUST BE DONE IN ACCORDANCE WITH THE RULES OF THE AUTHORITIES HAVING JURISDICTION AND THE CAN/CSA B-139 M-91 STANDARD FOR OIL BURNING HEATING APPLIANCES.

WARNING

OIL BURNING FURNACES ARE NOT APPROVED FOR USE WITH COMBUSTIBLE HEAVIER THAN NO.2 OIL (FURNACE OIL). DO NOT USE GASOLINE, TRANSMISSION OIL, OR OTHER TYPE OF OIL CONTAINING GASOLINE.

WARNING

FOR INSTALLATION IN WOOD/OIL CONFIGURATION, YOU MUST USE OF A 7" CHIMNEY. A 7" TO 6" REDUCER MUST BE INSTALLED AT THE FLUE OUTLET OF THE FURNACE.

19. DRAFT AND CHIMNEY

The chimney must conform to the rules of the authorities having jurisdiction and the CAN/CSA B139 & NFPA 31 standard regarding installation of oil burning heating appliances. The installation of the connecting pipes to the oil unit must be done and approved by a professional.

NOTE: The barometric damper provided with the appliance must be properly installed on the flue pipe of the oil burning unit. The purpose of the damper is to adjust the draft in the evacuation pipe of the oil burning unit to the recommended level. Since the evacuation pipe of the oil burning unit is connected on the evacuation pipe of the wood burning furnace, the minimum draft to be respected is 0.04 IN.W.C. in the evacuation pipe of the wood burning side, at all times. In fact, a barometric damper that would be opened too wide could cause an important loss of draft in the evacuation pipe of the wood burning furnace.

20. OIL TANK AND PIPING

The maximum capacity of the tank must not exceed 200 imperial gallons (900 liters) and the tank must be located at least 60" from the burner (a 24-inche distance is however recommended for maintenance). Local codes will govern the size of the air inlets and filling openings as well as the type of plugs to be used. 1 1/4" IPS and 2" IPS are usually accepted as minimum dimensions for the air intake pipes and fill pipes, respectively. The oil line to the burner must be a 3/8" outside diameter copper tubing for runs up to 50 feet, and 1/2" outside diameter for longer runs. A manual shut-off valve and an oil filter shall follow in sequence on the oil line between the oil tank and the burner. The oil line must be buried or protected adequately to avoid any damage.

21. BURNER PUMP

When the tank is located below the unit, the basic single course pump, powered by a single duct, can compensate for a drop of 8 feet (244 cm) measured between tank outlet and the height of entry into the burner.

When the rise is more than 8 feet (244 cm) and not exceeding 10 feet (305 cm), a by-pass plug (provided with the burner) must be inserted in the pump and an oil return pipe must be installed. ***For more details, see "INSTALLATION INFORMATIONS", Part No. 21844 on the burner pump.***

If the rise is higher than 10 feet (305 cm), a two stage pump may be required along with an oil return pipe.

0045- Appendix D5 (page 54 of 80)

22. APPLIANCE INSTALLATION

A Blocked Vent Switch is mandatory for installation with an oil fired appliance that normally operates with its vent system under a negative pressure. This device is intended to detect a blocked vent system, responds to hot flue gases backing up through its heat transfer tube, and can be wired to shut off the oil burner. It requires manual resetting.

22.1. UNIT LOCATION

See Section 9.6 - UNIT LOCATION for more details regarding the unit location.

22.2. PARALLEL INSTALLATION

See Section 9.13 - PARALLEL INSTALLATION

22.3. MINIMUM CLEARANCES TO COMBUSTIBLE MATERIALS

N.B. This appliance must be installed in conformity with the instructions on the certification label.

THE INSTALLATION OF THE HEAT SHIELD (-1-) PROVIDED WITH THE FURNACE IS MANDATORY.

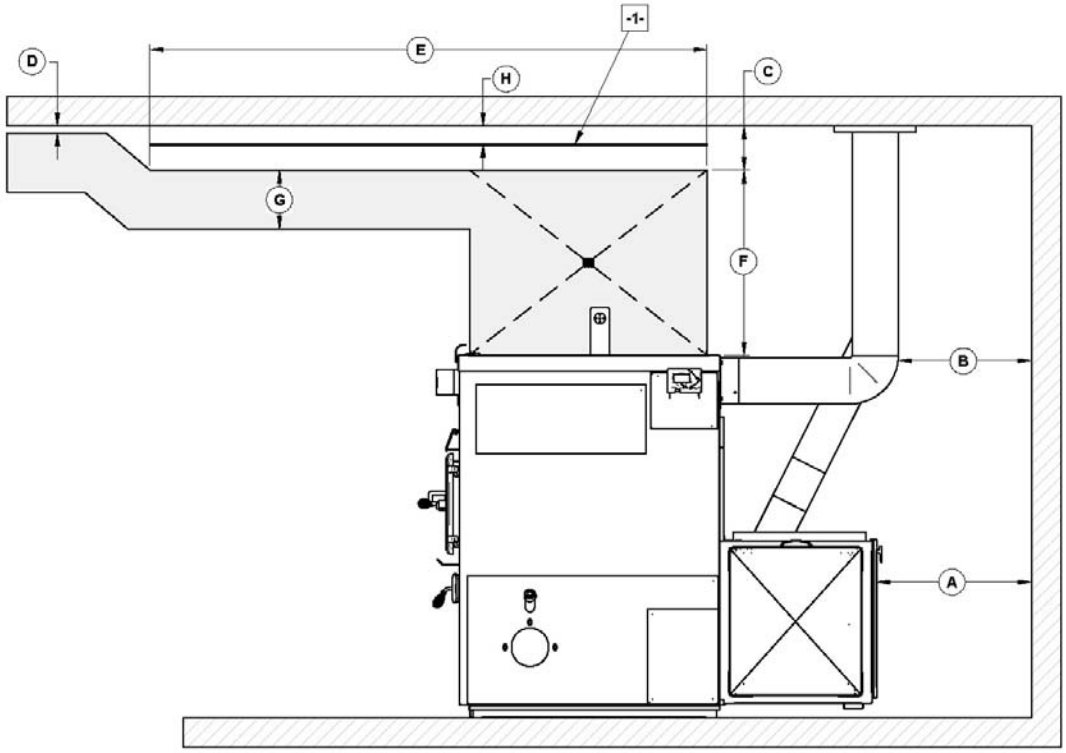

0045- Appendix D5 (page 55 of 80)

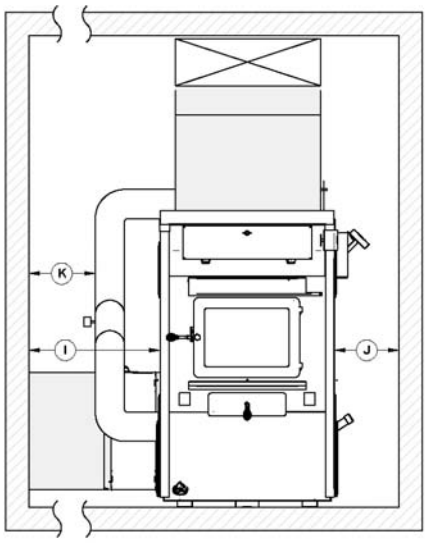

MIMINUM CLEARANCES			
A	24" (610 mm)	**G**	8" (203 mm)
B	18" (457 mm)	**H**	1.5" (mm)
C	6" (152 mm)	**I**	24" (610mm)
D	1" (25 mm)	**J**	24" (610mm)
E	72" (1829 mm)	**K**	9" (229mm)
F	24" (610 mm)		
-1-	**HEAT SHIELD**		

22.4. FLOOR PROTECTION

See Section 9.7.4 - FLOOR PROTECTION

22.5. HOT AIR PLENUM

See Section 9.12 - HOT AIR PLENUM

22.6. CONNECTING PIPE AND MANUAL DAMPER

The pipe connecting the furnace to the chimney must be as short and as straight as possible. If a deviation is required, the use of 45° elbows is highly recommended for a better evacuation of the smoke in the chimney of the wood burning furnace. The barometric damper provided with the appliance must be installed on the oil unit evacuation pipe, approximately 24" from the flue outlet of the unit.

TYPE OF FURNACE	OIL BURNING UNIT FLUE PIPE DIAMETER
MAX CADDY	5"

0045- Appendix D5 (page 56 of 80)

22.7. DIFFERENT INSTALLATION

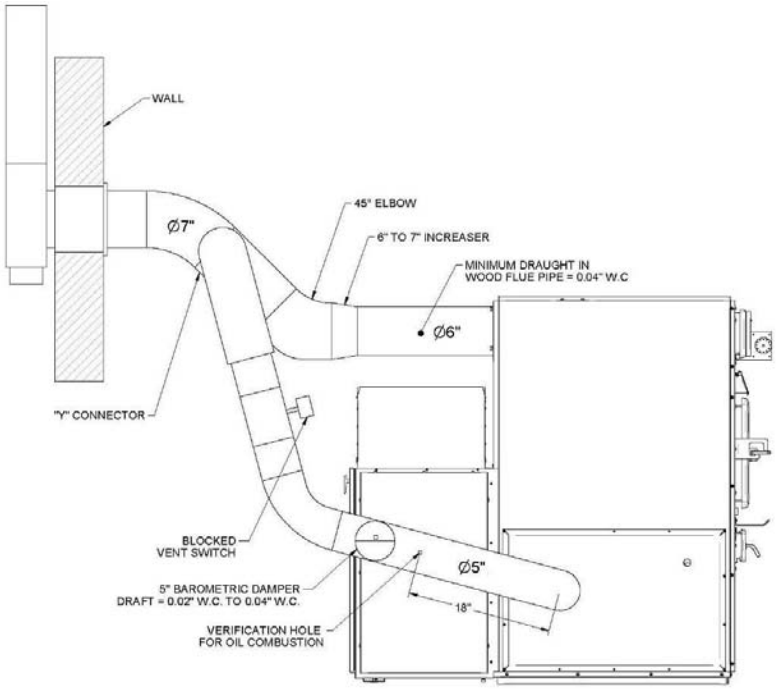

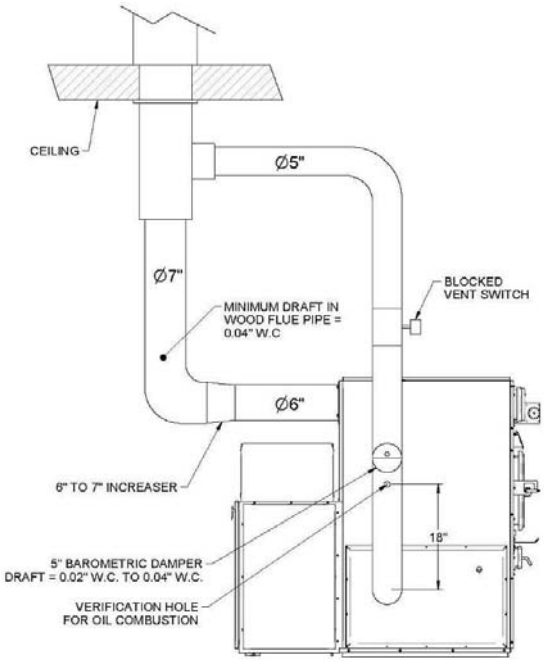

0045- Appendix D5 (page 57 of 80)

22.8. COMBUSTION AIR

See Section 9.11 - COMBUSTION AIR AND FRESH AIR INTAKE ADAPTER INSTALLATION (OPTIONAL)

22.9. ELECTRICAL WIRING

See Section 9.9 - ELECTRICAL CONNECTIONS

22.10. THERMOSTAT

See Section 10 - THERMOSTAT INSTALLATION

23. OPERATION INSTRUCTION

23.1. FAN SPEED CONTROL

See Section 11.5 - DISTRIBUTION BLOWER SPEED CONFIGURATION

23.2. COMBUSTION SAFETY CONTROL

The AFG type oil burner is equipped with an electronic control including a pre-purge function and a new, more durable drive motor.

23.3. PRE-PURGE

When there is a call for heat, the burner's fan will run for 15 seconds before the actual ignition takes place to vent the combustion chamber and generate a proper draft. This will result in a smoother ignition of the oil burner.

23.4. SAFE OPERATION

If the flame goes out while the burner is running, the control will then switch to the "RECYCLE" mode and cut the fuel supply to the burner for 60 seconds. After this delay, the control goes back to "IGNITION" mode. If the flame goes out 3 times in a row, the control will switch to the "LOCKOUT" mode to prevent a continuous cycling of the ignition process, which would cause a premature soot-up of the combustion chamber and smoke pipe. To deactivate the "LOCKOUT" mode, press and hold the reset button of the control for 30 seconds.
A green diagnostic light on the control has four states:

- On = Flame present
- Off = No flame
- 2 seconds On, 2 seconds Off = "Recycle" mode
- 1/2 second On, 1/2 second Off = "Lockout" mode TEMPORARY SHUT-OFF

23.5. TEMPORARY DISENGAGEMENT OF THE BURNER

By pressing and holding the reset button, the burner will shut-off until the reset button is released. When the button is released, the control will start over at the beginning of the normal cycle.

FOR ADDITIONAL INFORMATIONS ON OPERATION SEQUENCES OF THE BURNER, CONSULT THE BURNER INSTRUCTION MANUAL.

0045- Appendix D5 (page 58 of 80)

23.6. COMBUSTION ADJUSTMENT AND VERIFICATION

To enjoy the efficiency of our oil burning units, you must respect the following criterion:

Oil burning units must be connected to flue pipes having at all times a sufficient draft to ensure an efficient and safe operation of unit.

Before turning on the oil unit, make sure that the sealed vision cap (SE53352) is installed and secured on the vision tube with the screw provided. The chamber is calibrated so that there is a slight positive pressure, which optimizes the efficiency of combustion. The presence of the sealed vision cap thus prevents the return of oil odor.

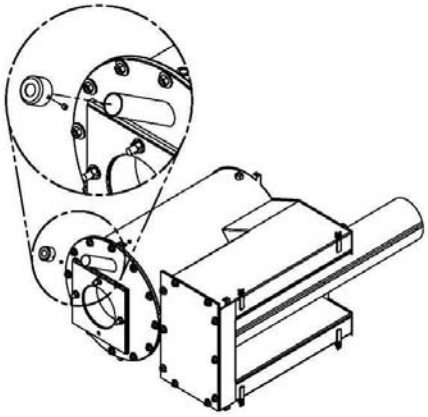

CHECK LIST:

- SELECTION OF NOZZLE AND HEAD
- NOZZLE / ELECTRODES POSITION IN RELATION TO THE HEAD
- PUMP PRESSURE
- OIL LINE IS BLEED.
- FAN SPEED
- BAROMETRIC DAMPER POSITION

TOOLS REQUIRED:

- DRAFT GAUGE
- SMOKE TESTER
- PUMP PRESSURE GAUGE
- NOZZLE AND ELECTRODES POSITION TESTER
- COMBUSTION TESTER

23.6.1. COMBUSTION VERIFICATION PROCEDURE:

A- DRILL A 9/32" DIAMETER HOLE IN THE EVACUATION PIPE APPROXIMATELY 18" FROM THE OUTLET.

B- CLOSE THE DOOR AND THE AIR INTAKE(S) OF THE WOOD BURNING FURNACE.

C- LIGHT THE BURNER FOR AT LEAST 10 TO 15 MINUTES.

D- OVER THE FIRE DRAFT = 0.01 TO 0.02 IN.W.C. (THE DRAFT OVER THE FIRE MUST BE MEASURED BY THE SCEALED CAP OF THE VISION TUBE'S PULSATION TRAP).

E- SMOKE TEST BETWEEN 0 AND 1 ON THE SHELL BACHARACH SCALE (TRACES).

F- DRAFT IN THE CHIMNEY = 0.02 IN.W.C.

G- PERCENTAGE OF EXCESS AIR = 20 TO 40%, 12% CO2, 5% O_2.

H- AVERAGE EFFICIENCY OF 83% TO 87% BASED ON THE TYPE OF BURNER AND ITS INPUT (SEE SECTION 24.1 - UH –MAX CADDY.

I- BURNER'S AIR ADJUSTEMENT: 0-7. TIGHTEN ALL THE LOCKING SCREWS AFTER COMPLETING THE FINAL ADJUSTMENT.

N.B. The barometric damper provided with the appliance must be properly installed on the flue pipe of the oil burning unit. The purpose of the damper is to adjust the draft in the evacuation pipe of the oil burning unit to the recommended level. Since the evacuation pipe of the oil burning unit is connected on the evacuation pipe of the wood burning furnace, the minimum draft to be respected is 0.04 IN.W.C. in the evacuation pipe of the wood burning side, at all times. ***In fact, a barometric damper that would be opened too wide could cause an important loss of draft in the evacuation pipe of the wood burning furnace.***

0045- Appendix D5 (page 59 of 80)

23.6.2. ELECTRODES SETTING

The electrodes must be adjusted by a qualified technician. A proper positioning of the electrodes is important to get an efficient lighting of the oil.

ELECTRODE SETTING FOR "F" HEAD

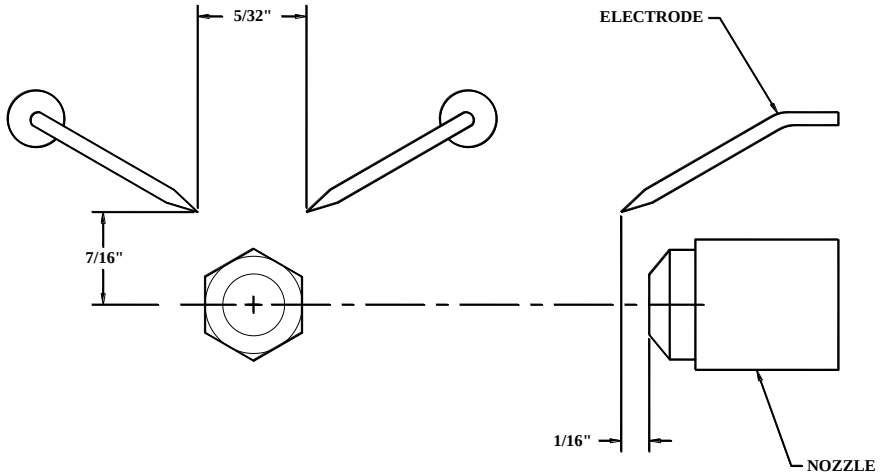

WARNING:

1. **REFER TO THE RATING PLATE FOR THE PUMP PRESSURE AND THE NOZZLE TYPE.**
2. **REFER TO THE OIL BURNER'S INSTRUCTIONS MANUAL FOR DETAILS ON THE PUMP.**
3. **FOR ELECTRODES SETTING, SEE THE OIL BURNER'S MANUAL.**
4. **FOR THE START-UP AND ADJUSTMENT OF THE BURNER, SEE OIL BURNER'S INSTRUCTION MANUAL.**
5. **THE BURNER WILL PROVIDE YEARS OF EFFICIENT OPERATION IF IT IS PROFESSIONALLY INSTALLED AND MAINTAINED BY A QUALIFIED SERVICE TECHNICIAN. IF AT ANY TIME THE BURNER DOES NOT APPEAR TO BE OPERATING PROPERLY, IMMEDIATELY CONTACT YOUR QUALIFIED SERVICE AGENCY FOR CONSULTATION.**
6. **FOR MORE DETAILS ABOUT THE BURNER, REFER TO THE BURNER'S MANUAL.**

0045- Appendix D5 (page 60 of 80)

23.7. APPLIANCE START-UP

The start-up must be performed by a qualified technician. Make sure the installation is completed and the oil tank has been filled up. The oil line must also have been purged.

CAUTION: CLOSE THE BLOWER COMPARTMENT ACCESS PANEL BEFORE STARTING THE BURNER.

23.8. PROLONGED CLOSING

A) Cut off the electric circuit
B) Close the oil shut-off valve

NOTE: THE SHUT-OFF VALVE MUST BE CLOSED WHEN THE APPLIANCE IS OUT OF SERVICE FOR A PROLONGED PERIOD OF TIME.

24. TECHNICAL DATA

24.1. UH –MAX CADDY

MODEL	BURNER TYPE	BTU INPUT	NOZZLE	FLOW	HEAD	STATIC PLATE	PRESSURE AT THE PUMP	H.P. FAN MOTOR	TUBULATOR ADJUSTMENT	AIR ADJUSTMENT	EFFICIENCY
UH–MAX CADDY	BECKETT AFG	91,000	0.65, 70^{0}W (DELAVAN)	0.65 GAL US/H (2.46 L-H)	F0	---	100 PSI (690 kPa)	1/2	---	0/7	85%
UH–MAX CADDY	BECKETT AFG	120,000	0.65, 70^{0}W (DELAVAN)	0.86 GAL US/H (3.26 L-H)	F0	---	175 PSI (1205 kPa)	1/2	---	1/6	83%
UH–MAX CADDY	RIELLO 40 F3	91,000	0.50, 70^{0}W (DELAVAN)	0.60 GAL US/H (2.27 L-H)	---	---	150 PSI (1035 kPa)	1/2	1	2.5	87%
UH–MAX CADDY	RIELLO 40 F3	120,000	0.65, 70^{0}W (DELAVAN)	0.84 GAL US/H (3.18 L-H)	---	---	165 PSI (1135 kPa)	1/2	1	2.5	85%

For any additional information, consult the rating plate on the left hand side of the appliance.

25. MAINTENANCE

At the beginning of heating season, have the complete installation inspected by a qualified service man, especially the lighting system and the controls.

NOTE: THE UNIT'S MAINTENANCE, REPAIRS AND THE CLEANING OF THE OIL FILTER MUST BE DONE BY A QUALIFIED TECHNICIAN.

25.1. MAINTENANCE

WARNING: TURN OFF ELECTRIC POWER SUPPLY BEFORE SERVICING THE UNIT.

1. The furnace, the burner and the flue pipe should be cleaned at least once a year.
2. The nozzle should be inspected and replaced if needed.
3. Handle the nozzle with care to avoid damaging its surface.
4. The electrodes should be adjusted as indicated in the burner manual.
5. Lubricate the burner motor bearings twice a year. (2 or 3 drops of SAE 20 non detergent lubricating oil).
6. The oil filter should be verified annually and replaced if needed.

0045- Appendix D5 (page 61 of 80)

25.2. SERVICE

Before calling for service, first check the following

- Fuel supply
- Electric fuses or breakers
- Thermostat setting
- PC board settings
- The state of the green diagnostic LED on the burner control.

Burner no.: _____ Model: _____ Date of installation: _____

Service telephone no.: Day: _____ Night: _____

Dealer's name and address: _____

TEST REPORT :

CO_2 _____% Temp. at stack: _____ Draft at stack: _____IN.W.C.

Nozzle output: _____ GPH Smoke colour: _____

Inspected by : _____

25.3. FILTERS

See Section 12.5 - FILTERS

0045- Appendix D5 (page 62 of 80)

26. ELECTRICAL DIAGRAM BECKETT OIL UNIT

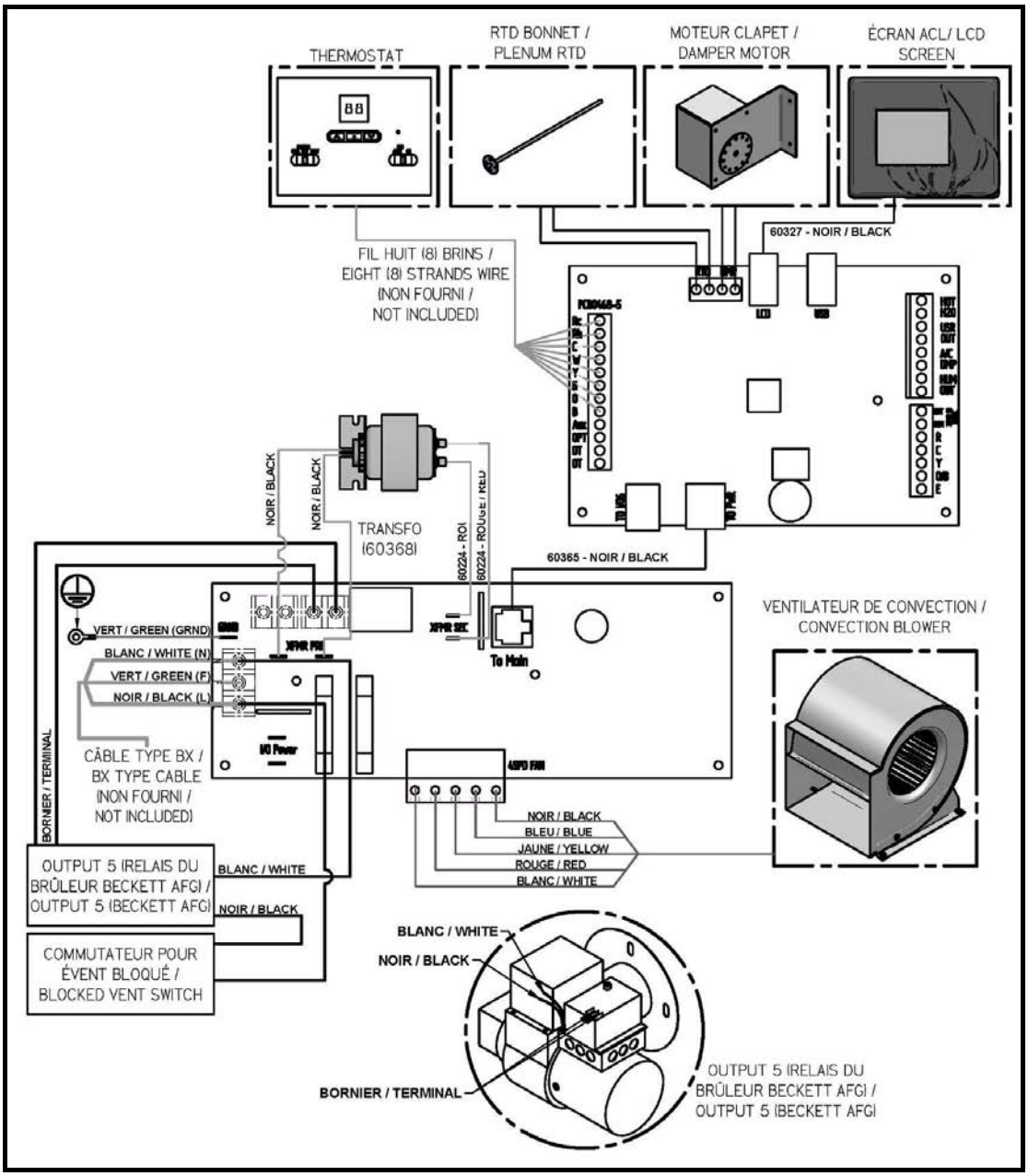

61

0045- Appendix D5 (page 63 of 80)

27. ELECTRICAL DIAGRAM RIELLO OIL UNIT

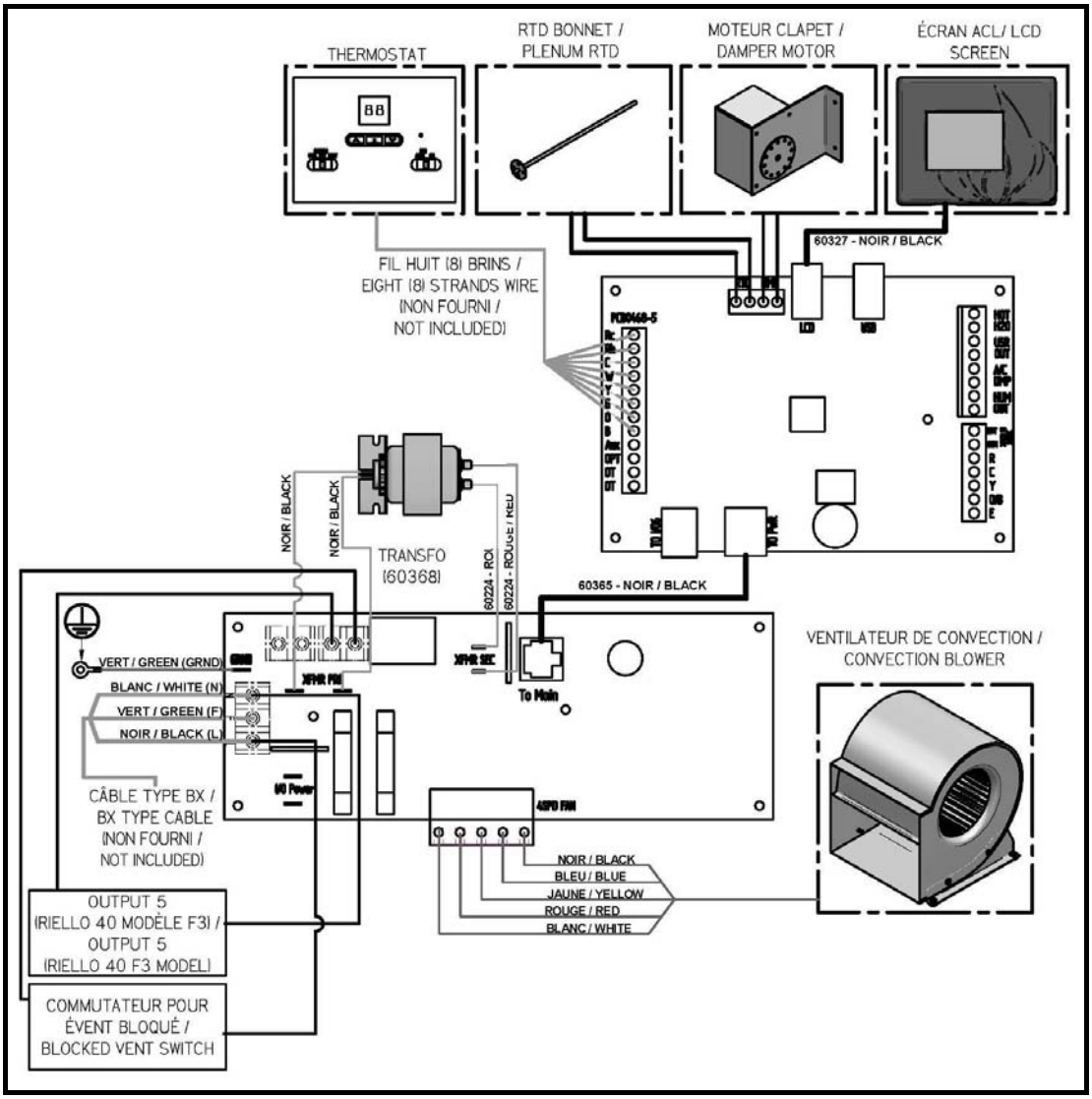

62

0045- Appendix D5 (page 64 of 80)

28. LINK BOARD OPTIONS CONNECTIONS

28.1. ELECTRICAL CONSUMPTION

Your Max Caddy furnace is able to supply electrical 24V current to control various options. The options that can be supported are described in the table below. The maximum available 24V current is 1.66 amps (transformer 24V @ 40VA). The table below shows the approximate electrical consumption of each of the options that can be installed with your Max Caddy furnace. It is important to note that those consumptions were determined according to the maximum consumption of the options tested by the manufacturer. It is possible to find on the market options having higher or lower electrical consumption than those shown in the table below. In the event that the combined electrical consumption of the installed options is higher than 1.66 amps, contact our technical support for further information.

WARNING: INCORRECT WIRING CAN DAMAGE THE LINK BOARD.

Option	Approximate consumption (mA)
Additional 24V equipment	500
Air conditioning damper	500
Humidifier	500
Heat pump	Current supply via additional transformer (not provided)
Thermostat (if not battery powered)	500

* It is important that the sum of the electrical consumption of the installed options is not higher than 1.66 amps.

28.2. OUTDOOR PROBE

* The outdoor probe act as a switch therefore it does not consumes electrical current.

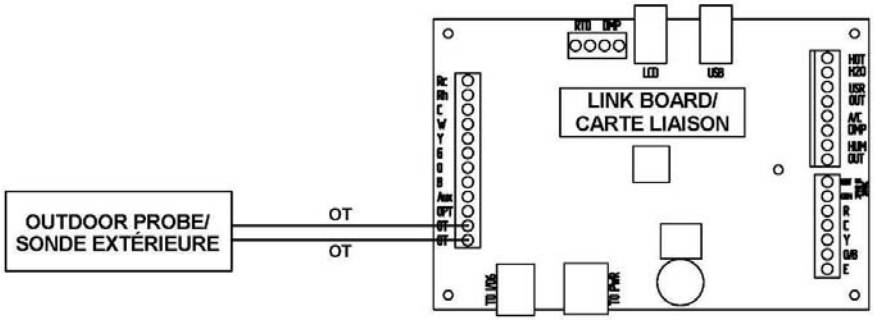

28.3. HOT WATER

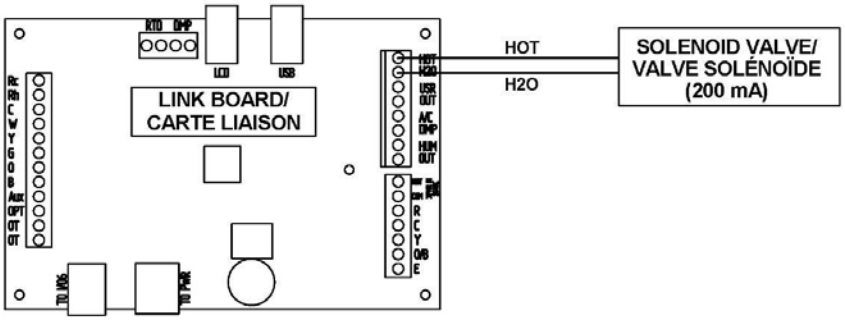

0045- Appendix D5 (page 65 of 80)

28.4. 24V ADDITIONNAL EQUIPMENT

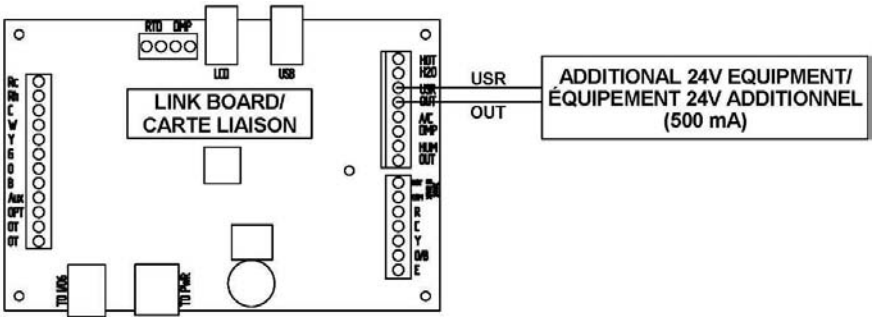

28.5. AIR CONDITIONNING DAMPER

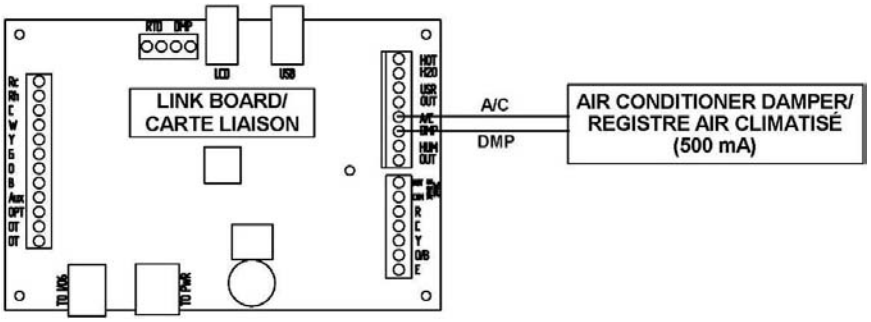

28.6. HUMIDIFIER

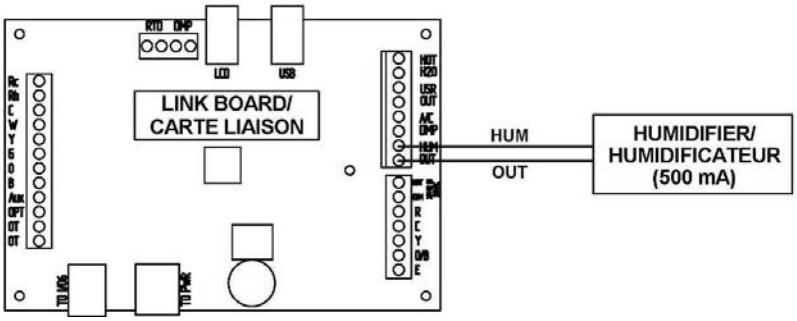

0045- Appendix D5 (page 66 of 80)

28.7. HEAT PUMP

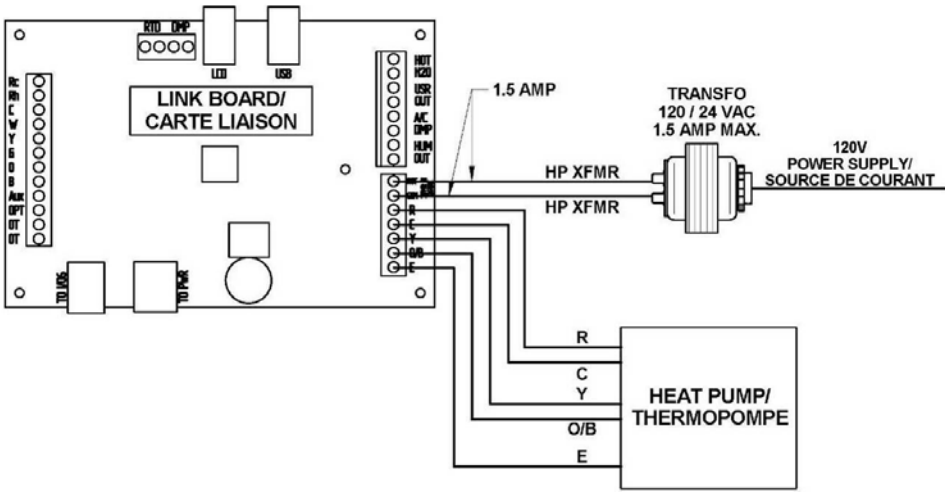

29. EXPLODED VIEW AND PART LIST

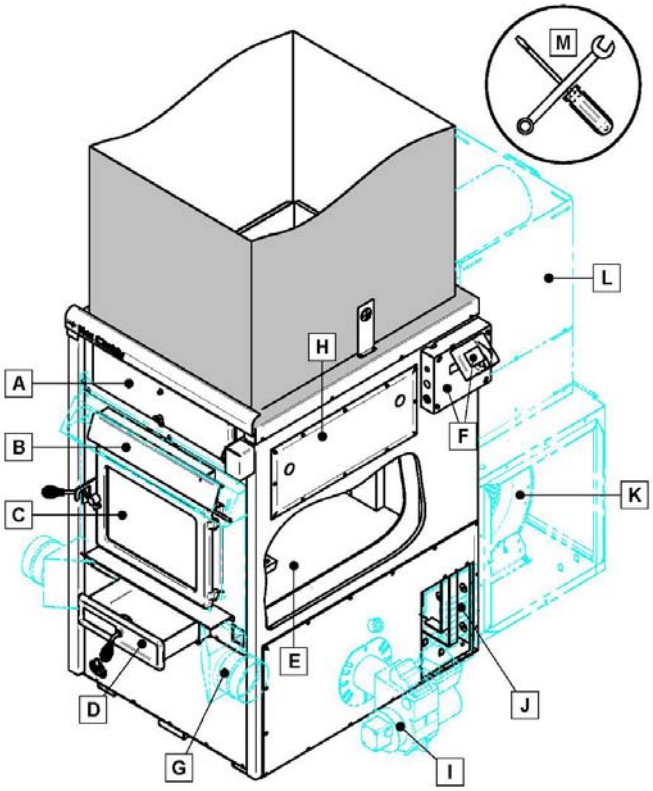

65

0045- Appendix D5 (page 67 of 80)

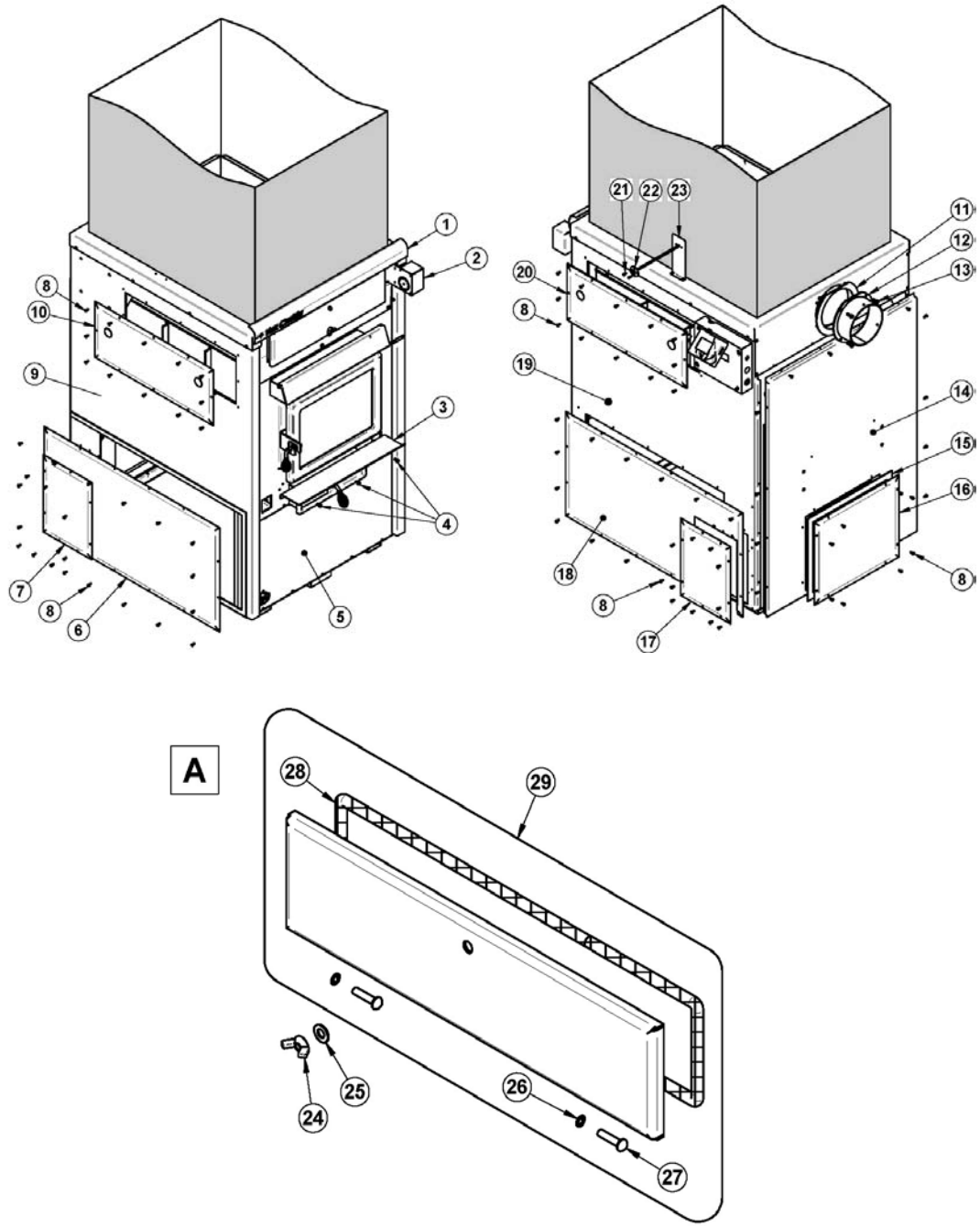

66

0045- Appendix D5 (page 68 of 80)

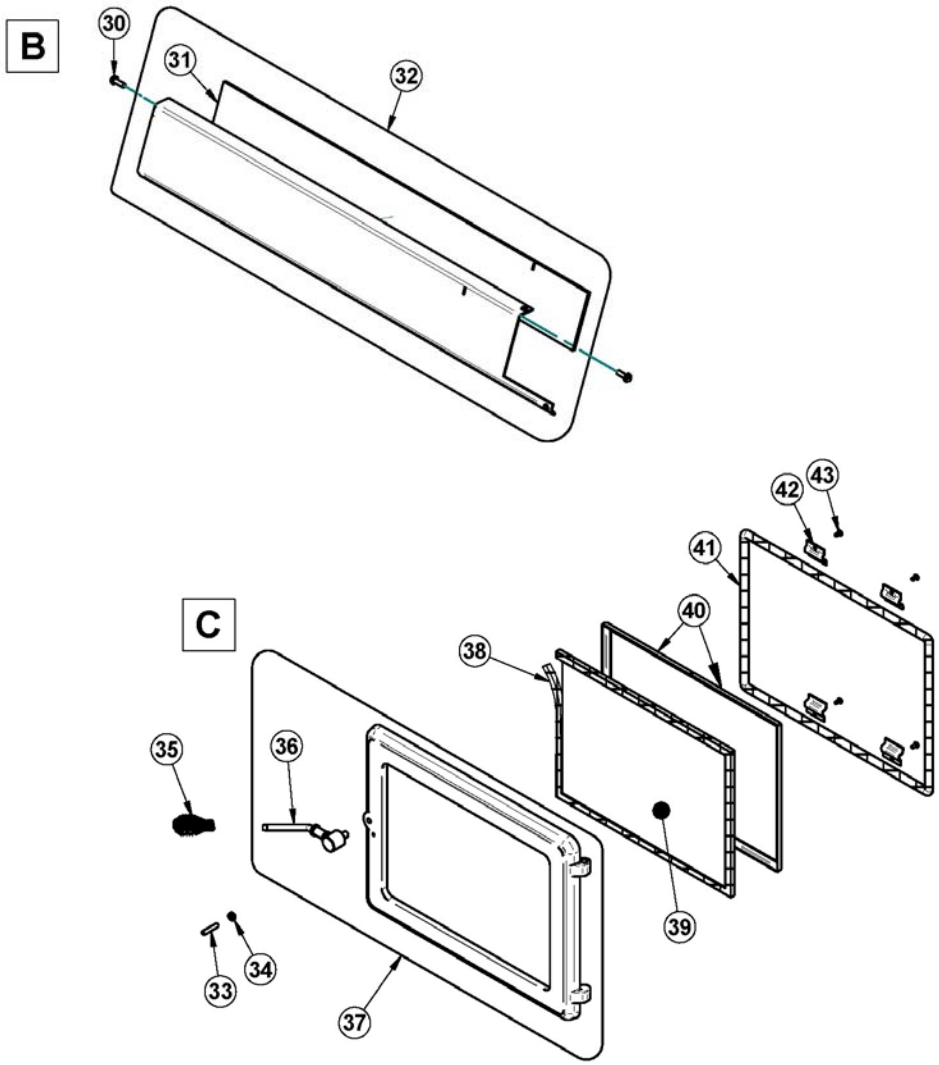

67

0045- Appendix D5 (page 69 of 80)

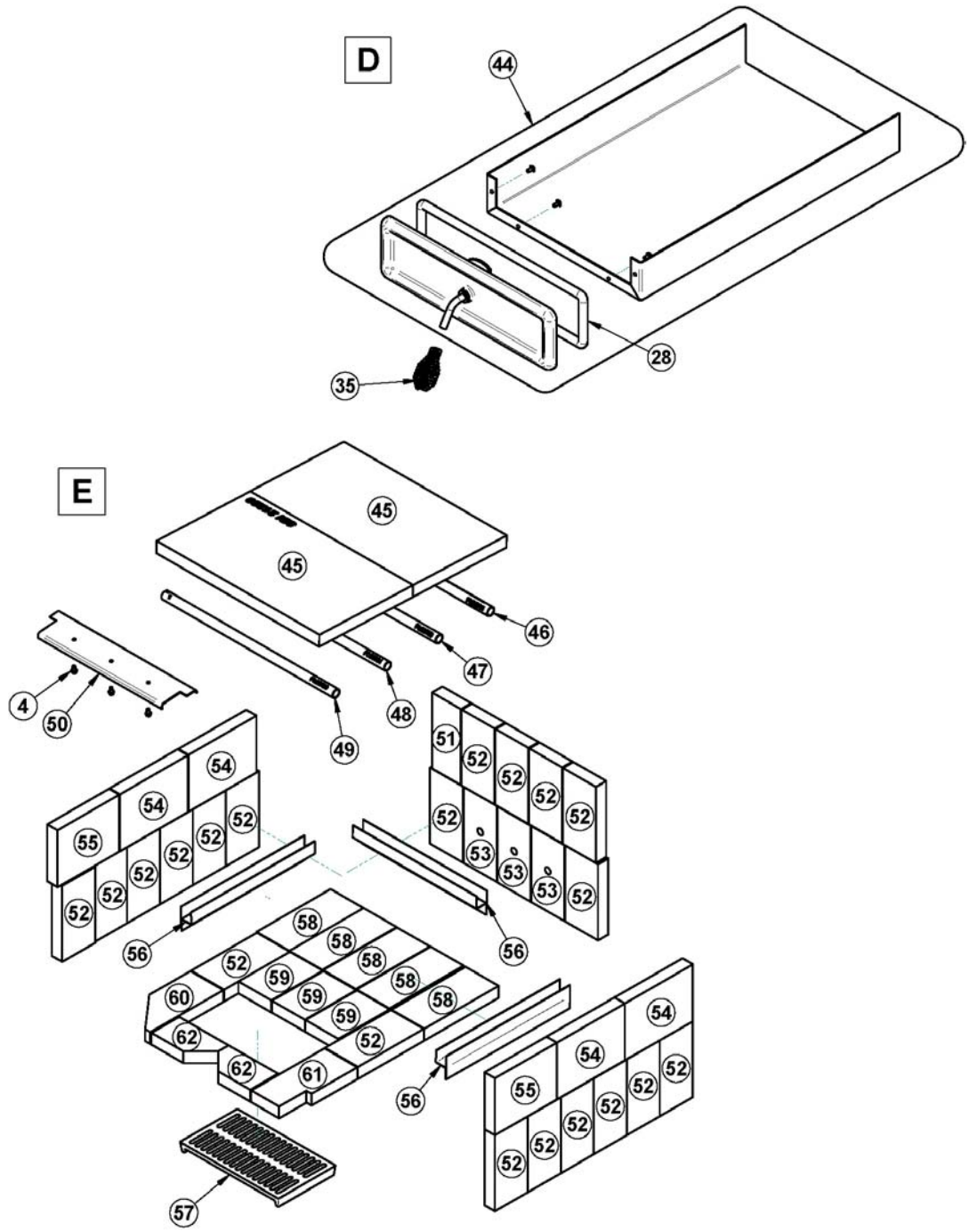

68

0045- Appendix D5 (page 70 of 80)

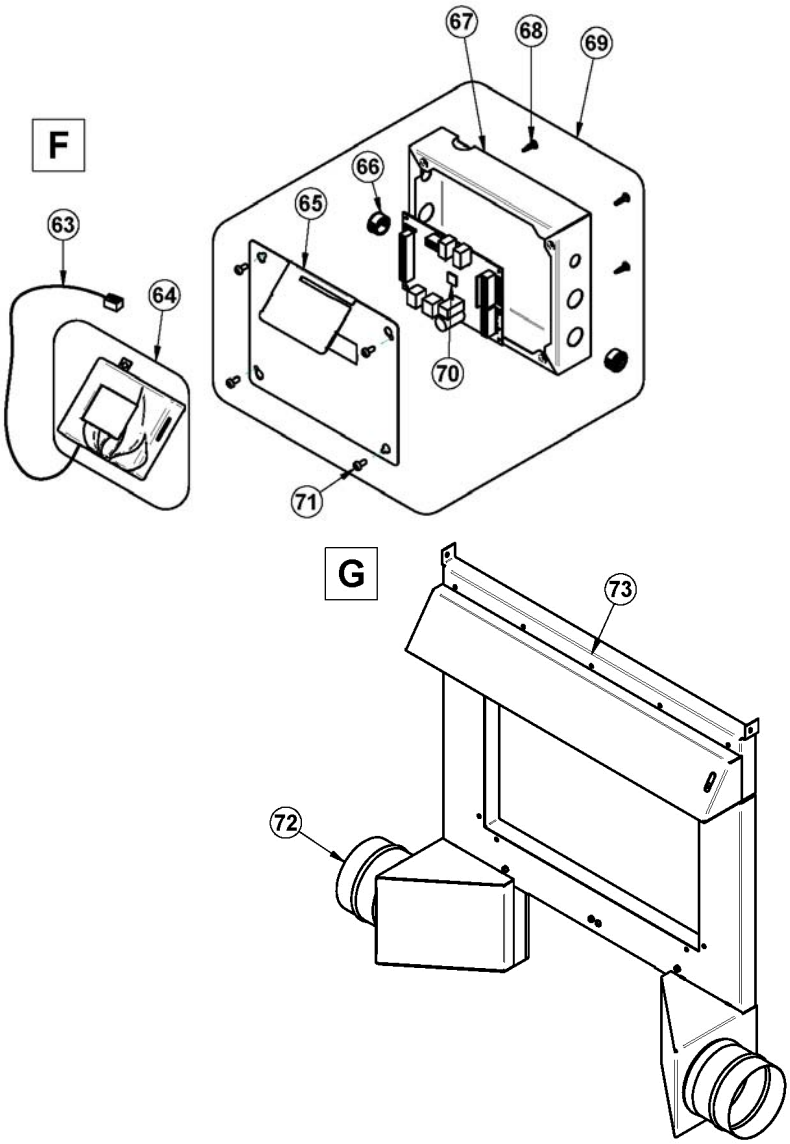

69

0045- Appendix D5 (page 71 of 80)

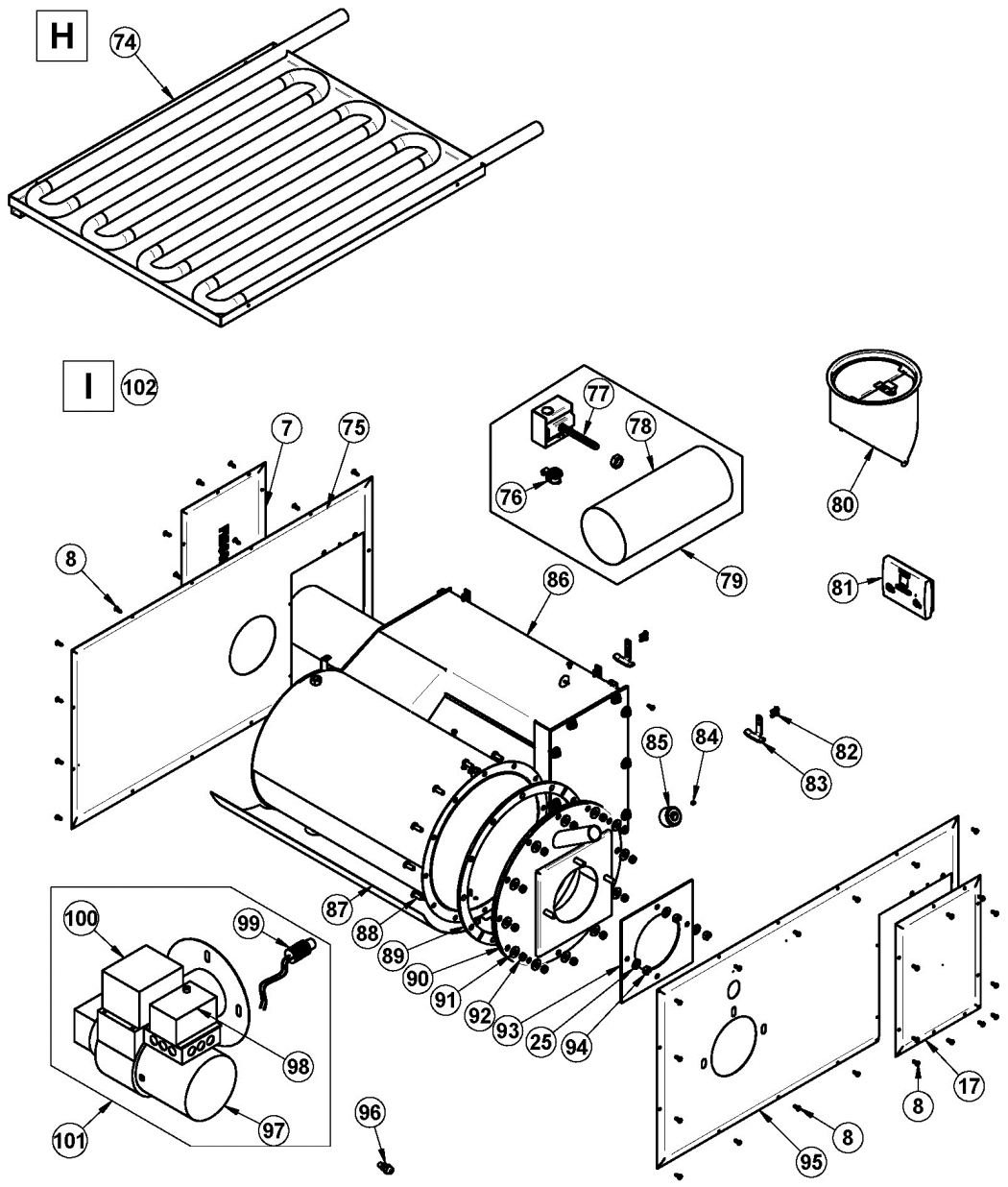

70

0045- Appendix D5 (page 72 of 80)

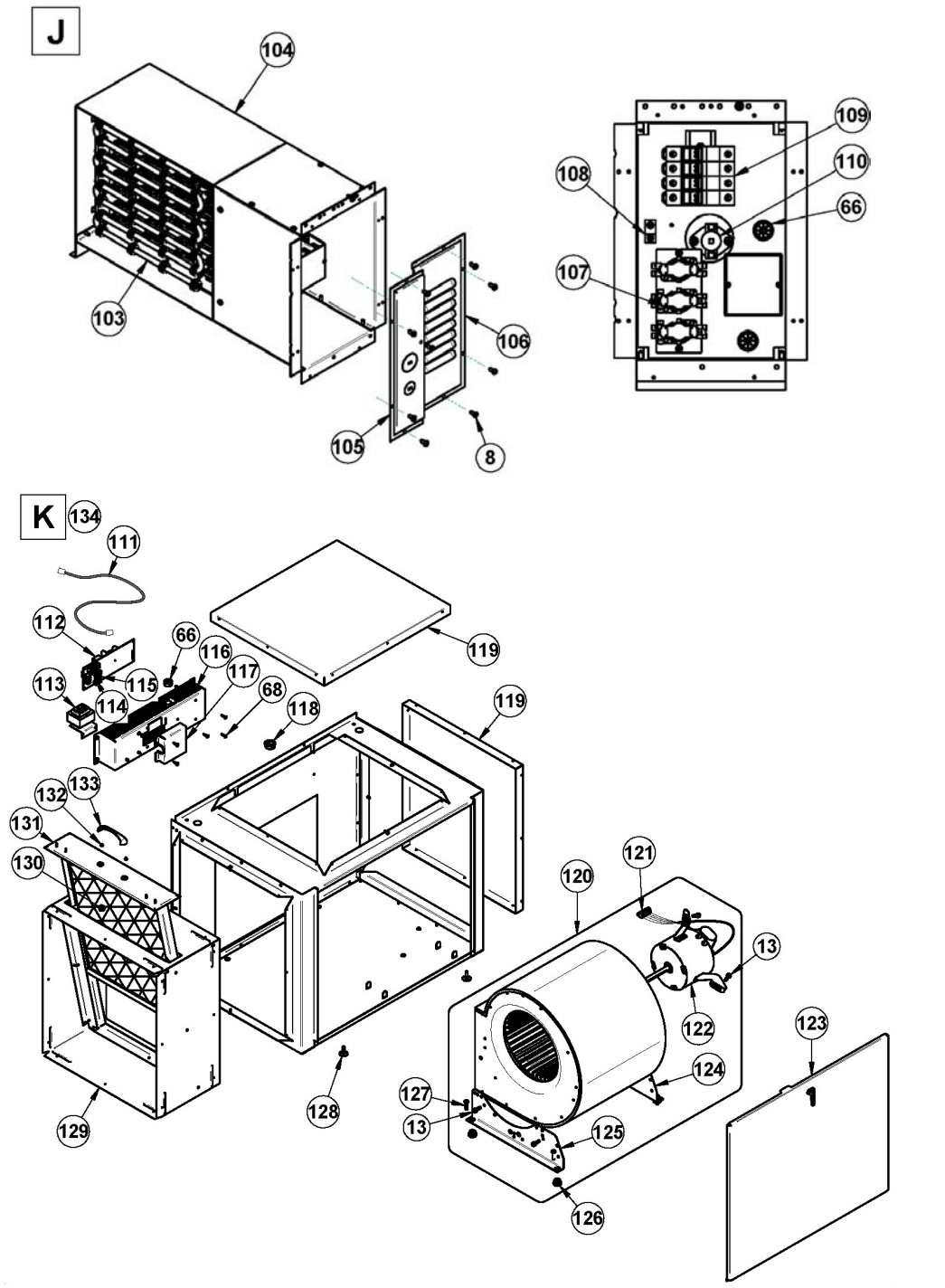

71

0045- Appendix D5 (page 73 of 80)

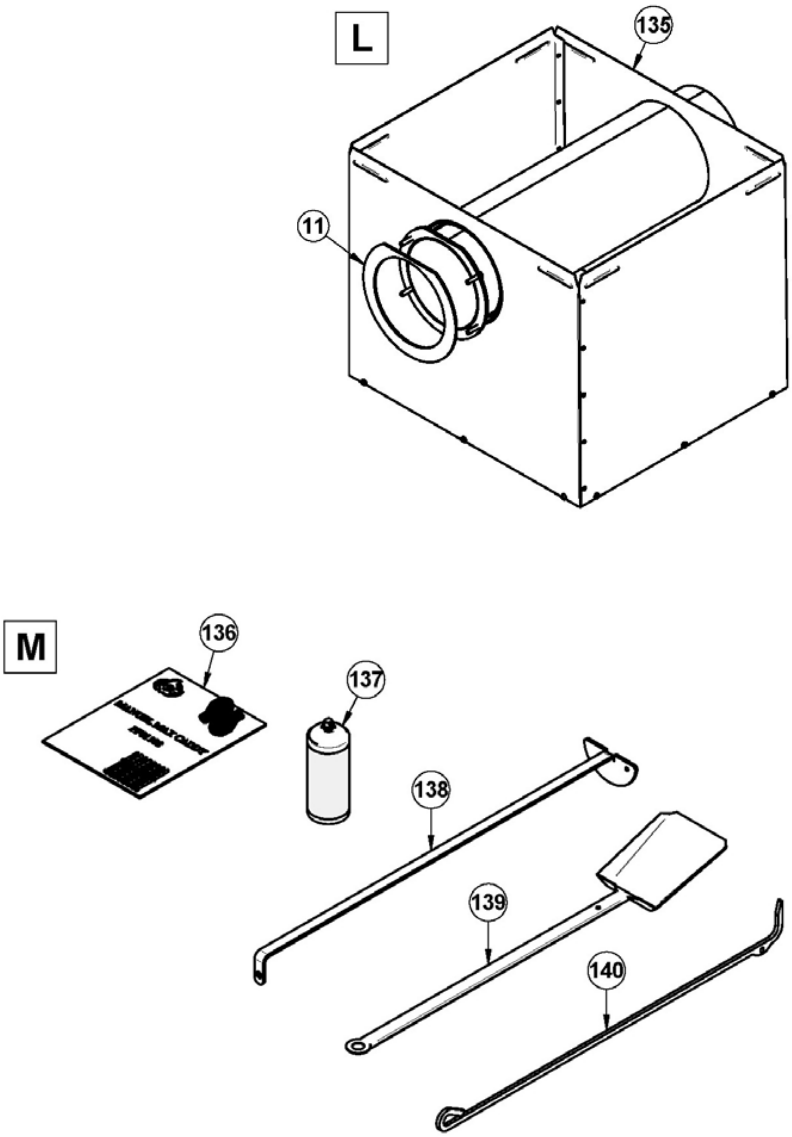

72

0045- Appendix D5 (page 74 of 80)

IMPORTANT: THIS IS DATED INFORMATION. When requesting service or replacement parts for your stove, please provide the model number and the serial number. We reserve the right to change parts due to technology upgrade or availability. Contact an authorized dealer to obtain any of these parts. Never use substitute materials. Use of non-approved parts can result in poor performance and safety hazards.

#	Item	Description	Qty
1	PL56400	DECORATIVE MOULDING	1
2	51000	HONEYWELL 24V DAMPER MOTOR	1
3	PL56276	ASH SHELF	1
4	30060	THREAD-CUTTING SCREW 1/4-20 x 1/2" F HEX STEEL SLOT WASHER C102 ZINC	3
5	PL56403	AIR JACKET FRONT BOTTOM PANEL	1
6	PL56412	LEFT PANEL FOR THE ELECTRICAL ELEMENT OPTION	1
7	PL56413	LEFT ACCESS COVER FOR ELECTRICAL ELEMENT	1
8	30131	BLACK METAL SCREW #10 X 1/2" TYPE "A" PAN QUADREX	1
9	SE56406	AIR JACKET LEFT PANEL WITH INSULATION	1
10	SE56415	LEFT PANEL WITH INSULATION WATER LOOP OPTION	1
11	21221	CHIMNEY ADAPTER GASKET	1
12	SE56352	FLUE COLLAR ASSEMBLY	1
13	30094	HEX SCREW WASHER HEAD 1/4-20 X 3/4" F ZINC TYPE	3
14	SE56408	REAR AIR JACKET PANEL	1
15	21342	REAR COVER GASKET	1
16	PL56480	REAR CABINET COVER	1
17	PL56411	RIGHT ACCESS COVER FOR ELECTRICAL ELEMENT	1
18	PL56410	RIGHT PANEL FOR THE ELECTRICAL ELEMENT OPTION	1
19	SE56407	RIGHT AIR JACKET PANEL WITH ISULATION	1
20	SE56414	RIGHT PANEL WITH INSULATION WATER LOOP OPTION	1
21	30153	METAL SCREW #8 X 1/2" PAN SQUARE TEK BLACK SELF DRILLING	2
22	SE44096	100 OHM RTD PROBE 38" WIRE WITH CONNECTOR	1
23	PL56343	RTD SUPPORT BRACKET	1
24	30416	WING NUT 3/8"-16	1
25	30205	ZINC WASHER ID 13/32" X OD 13/16"	4
26	30055	HINGE PIN RETAINING RING 5/16" ID X 0.512" OD	2
27	30168	HINGE PIN 5/16 DIA. X 1 1/4" L	2
28	AC06900	BLACK 1/2" ROUND X 9' GASKET KIT WITH ADHESIVE	1
29	SE56405	HEAT EXCHANGER ACCESS DOOR	1
30	30502	SELF TAPING SCREW #8 - 32 X 1/2" TYPE F X 3/4 HEX FLAT HEAD	2
31	21341	AIR CONTROL PLATE INSULATION	1
32	SE56322	PRIMARY AIR DAMPER ASSEMBLY	1
33	30128	SOCKET SET SCREW 1/4"-20 X 1 1/4"	1
34	30100	BLACK HEX NUT 1/4 - 20	1
35	30429	3/8" NICKEL COIL HANDLE	1
36	AC09151	REPLACEMENT HANDLE KIT	1
37	SE24027	MAX CADDY CAST IRON DOOR WITH HANDLE	1
38	AC06400	3/4" (FLAT) X 6' BLACK SELF-ADHESIVE GLASS GASKET	1
39	SE56287	REPLACEMENT GLASS WITH GASKET 10 7/8" X 15 1/8"	1
40	PL56285	GLASS RETAINER	2
41	OA11400	SILICONE AND 3/4" X 8' GASKET KIT	1
42	PL51351	GLASS RETAINER FRAME BRACKET	4

0045- Appendix D5 (page 75 of 80)

#	Item	Description	Qty
43	30124	SCREW #8 - 32 X 5/16" TRUSS QUADREX ZINC	4
44	SE56274	ASH DRAWER	1
45	21220	C-CAST BAFFLE 19 3/4" X 11 3/8" X 1 1/4"	2
46	PL56764	REAR SECONDARY AIR TUBE	1
47	PL56763	MIDDLE REAR SECONDARY AIR TUBE	1
48	PL56761	MIDDLE FRONT SECONDARY AIR TUBE	1
49	PL56760	FRONT SECONDARY AIR TUBE	1
50	PL56356	PRIMARY AIR DEFLECTOR HEAT SHIELD	1
51	PL36119	3 1/2" X 8" X 1 1/4" REFRACTORY BRICK	1
52	29001	4" X 8 1/8" X 1 1/4" REFRATORY BRICK HD	20
53	21343	4" X 8" X 1 1/4" REFRACTORY BRICK WITH HOLE	3
54	29005	6" X 8 1/4" X 1 1/4" REFRACTORY BRICK HD	4
55	PL36231	6" X 7 1/2" X 1 1/4" REFRACTORY BRICK	2
56	PL56286	BRICK RETAINER	3
57	24099	CAST IRON ASH GRATE 12" X 7"	1
58	29011	4" X 9" X 1 1/4" REFRACTORY BRICK HD	5
59	PL36234	4" X 6 1/4" X 1 1/4" REFRACTORY BRICK	3
60	PL36059	CUT BRICK 4" X 8 7/8" X 3 3/8" X 3 7/8"	1
61	PL36232	4" X 8 3/4" X 1 1/4" X 1/2" X 3 1/4 REFRACTORY BRICK	1
62	PL36233	3 1/2" X 6" X 1 1/4" REFRACTORY BRICK	2
63	60327	JUNCTION WIRE MAIN CONTROL BOARD TO LCD	1
64	SE56777	MAX CADDY TOUCH SCREEN BOARD (LCD) WITH HOUSING	1
65	PL48251	PC BOARD HOUSING COVER	1
66	30412	BLACK UNIVERSAL SNAP-IN BUSHING	1
67	PL48250	PC BOARD HOUSING	1
68	30408	ELECTRONIC BOARD CLIP	9
69	SE56823	POWER BOARD HOUSING ASSEMBLY	1
70	PL56823	LIMIT MAIN CONTROL BOARD WITH PROGRAM	1
71	30154	BLACK SCREW #10 X 5/8" ROBERTSON TYPE A	4
72	49068	ADAPTER 5" FOR FRESH AIR INTAKE KIT	2
73	PA08560	5" FRESH AIR INTAKE ADAPTER	1
74	PA08550	HOT WATER LOOP KIT FOR PRE-HEATING OF DOMESTIC WATER	1
75	PL56466	LEFT OIL UNIT PANEL	1
76	60201	CONNECTOR 1 SCREW 3/8" FOR BX WIRE	1
77	60216	ELECTRICAL CABLE BX 14/2 50-003-500	1
78	49021	5" PIPE WITH 41/64 HOLE FOR WMO-1 SAFETY DEVICE	1
79	SE48210	BLOCKED FLUE OIL UNIT SWITCH	1
80	51018	BAROMETIC DAMPER 6", 7" AND 8"	1
81	44134	MILLIVOLT THERMOSTATS - WHITE	1
82	30026	THREAD CUTTING SCREW 10-24 F 5/8" HEX WASHER HEAD	4
83	PL56435	OIL UNIT LEG	2
84	30095	SET SCREW HEX 1/4-20 X 1/4"	1
85	SE53352	SEALED VISION CAP	1
86	SE56420	MAX CADDY OIL COMBUSTION CHAMBER	1
87	PL56345	OIL COMBUSTION CHAMBER REAR DEFLECTOR	1
88	30092	BOLT 5/16"-18 X 3/4" HEX GRADE 5	12

0045- Appendix D5 (page 76 of 80)

#	Item	Description	Qty
89	21079	OIL UNIT COVER GASKET	1
90	SE53269	OIL UNIT COVER ASSEMBLY WITH VISION TUBE	1
91	30210	WASHER 29/32" OD X 3/8" ID ZINC	12
92	30425	NUT BRASS 5/16 - 18 HEX	12
93	21085	BURNER / OIL UNIT GASKET	1
94	30423	3/8" - 16 HEX ZINC NUT	3
95	PL56465	RIGHT OIL UNIT PANEL	1
96	51024	NOZZLE DELAVAN .65GPH X 70° W	1
97	60043	BECKETT CLEANCUT OIL PUMP WITH SOLENOID	1
98	44019	PRIMARY CONTROL HW	1
99	44018	CAD CELL BECKETT BURNER	1
100	44023	BECKETT BURNER IGNITOR (TRANSFO)	1
101	51007	RIELLO OIL BURNER	1
101	51006	BECKETT AFG BURNER	1
102	PA08512	BECKETT OIL UNIT	1
102	PA08511	RIELLO OIL UNIT	1
103	60253	10 kW ELECTRICAL ELEMENT (DOUBLE 5 kW)	1
103	60245	SINGLE 5 kW ELECTRIC ELEMENT	1
104	PA08535	20 kW ELECTRICAL ELEMENT	1
104	PA08545	25 kW ELECTRICAL ELEMENT	1
105	PL56507	LEFT COVER OF ELECTRICAL UNIT	1
106	PL56508	AERATION COVER ELECTRICAL UNIT	1
107	60202	SEQUENCER 15S X 441	1
108	60207	ALUMINUM LUG 14-6 STUD 17/64	1
109	60194	FUSE HOLDER 30A. 600V PROTECTION	1
110	60237	THERMODISC L170 MANUAL RESET FOR ELECTRICAL ELEMENT	1
111	60365	60" COMMUNICATION WIRE - 8 CONDUCTOR	1
112	44182	TRIAC BOARD	1
113	60368	TRANSFORMER 120 V/24 V 40 VA	1
114	44136	FUSE 12A / 250V / 1/4" DIA. X 1 1/4" L	1
115	44137	FUSE 1A / 250V / 1/4" DIA. X 1 1/4" L	1
116	PL48243	POWER BOARD HOUSING	1
117	PL48242	POWER BOARD ACCESS PANEL	1
118	30406	BLACK SNAP-ON BUSHING 1 3/4" X 7/8" X 1"	1
119	PL56417	BLOWER BOX REMOVABLE COVER	1
120	SE56512	FAN ASSEMBLY WITH 1/2 HP DD MOTOR	1
121	44186	5 POSITIONS TERMINAL BLOCK	1
122	51038	1/2 HP 4 SPEED MOTOR FOR G-10 DD	1
123	SE56419	BLOWER ACCESS DOOR ASSEMBLY	1
124	30334	LEFT HOUSING SUPPORT FOR G10 BLOWER 10-458-085	1
125	30336	RIGHT HOUSING SUPPORT FOR G10 BLOWER	1
126	30335	BLOWER ANTI-VIBRATION CUSHION	4
127	30109	BOLT HEX 1/4 - 20 X 1"	4
128	30536	LEVELING BOLT 1/4 - 20 X 1"	2
129	SE56418	DUCT SUPPORT ASSEMBLY	1
130	21231	CARDBOARD AIR FILTER 20" X 16" X 1"	1

0045- Appendix D5 (page 77 of 80)

#	Item	Description	Qty
131	SE56450	FILTER DRAWER	1
132	30108	MECHANICAL SCREW M4 X 4MM PAN PHILLIPS ZINC	2
133	28062	BLACK DRAWER HANDLE 3 25/32"	1
134	PA08566	BLOWER ASSEMBLY	1
135	PA08500	TOP AIR RETURN PLENUM KIT	1
136	SE45833	MAX CADDY INSTRUCTION MANUAL KIT	1
137	AC05961	PSG GREY 424C SPRAY PAINT	1
137	AC05963	METALLIC BLACK STOVE PAINT - 85 g (3oz) AEROSOL	1
138	PL48170	HEAT EXCHANGER SCRAPER	1
139	PL48171	ASH SHOVEL	1
140	PL48173	POKER	1

0045- Appendix D5 (page 78 of 80)

WHY PURCHASE THROUGH AN AUTHORIZED PSG DEALER?

To make sure your PSG furnace provides comfort and energy savings in your home for many years, your choice of installer is extremely important. An authorized PSG dealer will ensure that the system is optimized and installed according to standards. Given the importance of the installation, PSG recommends that it is carried out by a professional certified in the Building Code so that the furnace delivers its full potential. This is why PSG offers an additional warranty that covers the cost of labor if your furnace has been purchased through an authorized PSG dealer.

If you want to enjoy the best service on the market and substantial savings on heating costs, there is really only one choice: an **Authorized PSG Dealer**.

0045- Appendix D5 (page 79 of 80)

PSG LIMITED LIFETIME WARRANTY (REGULAR)

The warranty of the manufacturer extends only to the original consumer purchaser and is not transferable. This warranty covers brand new products only, which have not been altered, modified nor repaired since shipment from factory. Proof of purchase (dated bill of sale), model name and serial number must be supplied when making any warranty claim to your PSG dealer.

This warranty applies to normal residential use only. Damages caused by misuse, abuse, improper installation, lack of maintenance, over firing, negligence or accident during transportation, power failures, downdrafts, or venting problems are not covered by this warranty.

This warranty does not cover any scratch, corrosion, distortion, or discoloration. Any defect or damage caused by the use of unauthorized parts or others than original parts void this warranty. An authorized qualified technician must perform the installation in accordance with the instructions supplied with this product and all local and national building codes. Any service call related to an improper installation is not covered by this warranty.

The manufacturer may require that defective products be returned or that digital pictures be provided to support the claim. Returned products are to be shipped prepaid to the manufacturer for investigation. If a product is found to be defective, the manufacturer will repair or replace such defect. Transportation fees to ship the product back to the purchaser will be paid by the manufacturer. All parts costs covered by this warranty are limited according to the table below.

The manufacturer at its discretion may decide to repair or replace any part or unit after inspection and investigation of the defect. The manufacturer may, at its discretion, fully discharge all obligations with respect to this warranty by refunding the wholesale price of any warranted but defective parts. The manufacturer shall in no event be responsible for any special, indirect, consequential damages of any nature, which are in excess of the original purchase price of the product. A one-time replacement limit applies to all parts benefiting from a lifetime coverage. This warranty applies to products purchased after April 1st, 2013.

DESCRIPTION	WARRANTY APPLICATION	
	PARTS	LABOUR
Castings, combustion chamber (welds only), castings, and heat exchanger (welds only).	Lifetime	n/a
Stainless steel firebox components, secondary air tubes*, surrounds and heat shields, ash drawer, and plating* (defective manufacture).	5 years	n/a
Carbon steel firebox components, glass retainers, handle assembly, C-Cast baffle*, and vermiculite baffle*.	3 years	n/a
Oil burner, electrical elements, blowers, heat sensors, switches, rheostat, relays, damper motor, fan limit control, PC board, wiring, and other controls.	2 years	n/a
Ceramic glass (thermal breakage only*), paint (peeling), gaskets, insulation, and ceramic fibre blankets.	1 year	n/a
Firebrick	n/a	n/a

**Pictures required*

Shall your unit or a components be defective, contact immediately your PSG dealer. Prior to your call make sure you have the following information necessary to your warranty claim treatment:

- Your name, address and telephone number;
- Bill of sale and dealer's name;
- Serial number and model name as indicated on the nameplate fixed to the back of your unit;
- Nature of the defect and any relevant information.

Before shipping your unit or defective component to our plant, you must obtain from your PSG dealer an Authorization Number. Any merchandise shipped to our plant without authorization will be refused automatically and returned to sender.

0045- Appendix D5 (page 80 of 80)

PSG LIMITED LIFETIME WARRANTY (PRIVILEGE)

The warranty of the manufacturer extends only to the original consumer purchaser and is not transferable. This warranty covers brand new products only, which have not been altered, modified nor repaired since shipment from factory and purchased through an authorised dealer. Proof of purchase (dated bill of sale), model name and serial number must be supplied when making any warranty claim to your PSG dealer.

This warranty applies to normal residential use only. Damages caused by misuse, abuse, improper installation, lack of maintenance, over firing, negligence or accident during transportation, power failures, downdrafts, or venting problems are not covered by this warranty.

This warranty does not cover any scratch, corrosion, distortion, or discoloration. Any defect or damage caused by the use of unauthorized parts or others than original parts void this warranty. An authorized qualified technician must perform the installation in accordance with the instructions supplied with this product and all local and national building codes. Any service call related to an improper installation is not covered by this warranty.

The manufacturer may require that defective products be returned or that digital pictures be provided to support the claim. Returned products are to be shipped prepaid to the manufacturer for investigation. If a product is found to be defective, the manufacturer will repair or replace such defect. Transportation fees to ship the product back to the purchaser will be paid by the manufacturer. Repair work covered by the warranty, executed at the purchaser's domicile by an authorized qualified technician requires the prior approval of the manufacturer. Labour cost and repair work to the account of the manufacturer are based on predetermined rate schedule and must not exceed the wholesale price of the replacement part. All parts and labour costs covered by this warranty are limited according to the table below.

The manufacturer at its discretion may decide to repair or replace any part or unit after inspection and investigation of the defect. The manufacturer may, at its discretion, fully discharge all obligations with respect to this warranty by refunding the wholesale price of any warranted but defective parts. The manufacturer shall in no event be responsible for any special, indirect, consequential damages of any nature, which are in excess of the original purchase price of the product. A one-time replacement limit applies to all parts benefiting from a lifetime coverage. This warranty applies to products purchased after April 1st, 2013.

DESCRIPTION	WARRANTY APPLICATION	
	PARTS	LABOUR
Castings, combustion chamber (welds only), castings, and heat exchanger (welds only).	Lifetime	3 years
Stainless steel firebox components, secondary air tubes*, surrounds and heat shields, ash drawer, and plating* (defective manufacture).	5 years	3 years
Carbon steel firebox components, glass retainers, handle assembly, C-Cast baffle*, and vermiculite baffle*.	3 years	1 year
Oil burner, electrical elements, blowers, heat sensors, switches, rheostat, relays, damper motor, fan limit control, PC board, wiring, and other controls.	2 years	1 year
Ceramic glass (thermal breakage only*), paint (peeling), gaskets, insulation, and ceramic fibre blankets.	1 year	n/a
Firebrick	n/a	n/a

**Pictures required*

Shall your unit or a components be defective, contact immediately your PSG dealer. Prior to your call make sure you have the following information necessary to your warranty claim treatment:

- Your name, address and telephone number;
- Bill of sale and dealer's name;
- Serial number and model name as indicated on the nameplate fixed to the back of your unit;
- Nature of the defect and any relevant information.

Before shipping your unit or defective component to our plant, you must obtain from your PSG dealer an Authorization Number. Any merchandise shipped to our plant without authorization will be refused automatically and returned to sender.

0046- Appendix D6

Unit Owner's Manual

Heatporo

Appendix D-6

0046- Appendix D6 (page 2 of 75)

Installation and operating instructions for the

HEATPRO WOOD FURNACE

(DF03000 model)

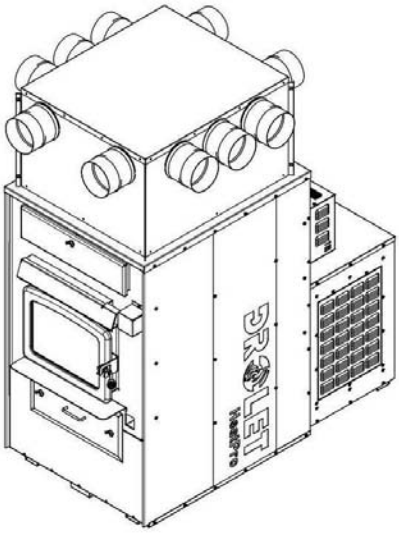

Verified and tested for Canada
and the United States
by an accredited laboratory

Stove Builder International Inc.
250, rue de Copenhague,
St-Augustin-de-Desmaures (Quebec)
Canada G3A 2H3
After-sale service: 418-908-8002
E-mail: tech@sbi-international.com

This manual is available for free download on the manufacturer's web site. It is a copyrighted document. Re-sale is strictly prohibited. The manufacturer may update this manual from time to time and cannot be responsible for problems, injuries, or damages arising out of the use of information contained in any manual obtained from unauthorized sources.

Please keep this document!

READ THESE INSTRUCTIONS CAREFULLY BEFORE INSTALLING AND OPERATING YOUR FURNACE.

PLEASE KEEP THIS MANUAL FOR REFERENCE

45817A
Printed in Canada 18-05-2016

0046- Appendix D6 (page 3 of 75)

THANK YOU FOR CHOOSING THIS DROLET WOOD FURNACE

As one of North America's largest and most respected wood stove, furnace and fireplace manufacturers, Stove Builder International takes pride in the quality and performance of all its products. We want to help you get maximum satisfaction as you use this product.

In the pages that follow you will find general advice on wood heating, detailed instructions for safe and effective installation, and guidance on how to get the best performance from this furnace as you build and maintain fires, and maintain your wood heating system.

Congratulations on making a wise purchase.

When this furnace is not properly installed, a house fire may result. To reduce the risk of fire, follow the installation instructions. Contact local building or fire officials about restrictions and installation inspection requirements in your area.

Please read this entire manual before you install and use your new furnace. Failure to follow instructions may result in property damage, bodily injury, or even death. It is important that you follow the installations guidelines exactly.

You may need to obtain a building permit for the installation of this furnace and the chimney that it is connected to. Consult your municipal building department or fire department before installation to determine the need to obtain one. We recommend that you also inform your home insurance company to find out if the installation will affect your policy.

REGISTER YOUR WARRANTY ONLINE

To receive full warranty coverage, you will need to show evidence of the date you purchased your furnace. Keep your sales invoice. We also recommend that you register your warranty online at:
http://www.drolet.ca/en/service-support/warranty-registration
Registering your warranty online will help us to quickly track the information we need about your furnace.

0046- Appendix D6 (page 4 of 75)

Table of contents

PART 1 – INSTALLATION 6
INTRODUCTION 6
1 Regulations and safety warnings covering installation 7
1.1 Regulations covering furnace installation 7
1.2 Cautions and warnings covering installation 7
2 Authorized and non-authorized configuration 8
2.1 Authorized configurations in Canada and United States 8
2.2 Authorized configurations in United States only 8
2.3 Non-authorized configuration, Canada and United States 9
3 Setting up the unit and clearances 9
3.1 Unit location 9
3.2 Certification label 9
3.3 Clearances to combustible material 10
3.3.1 Clearances with single and double wall pipe 11
3.3.2 Cold air return ductwork Clearances 11
3.3.3 Floor protection 12
4 The venting system 13
4.1 The chimney 13
4.1.1 Factory-built metal chimneys 13
4.1.2 Masonry chimneys 14
4.1.3 Minimum chimney height 15
4.2 The connector pipe 15
4.2.1 Best practices and requisites of the installation code 15
5 Hot air distribution and air return system 17
5.1 Hot air distribution plenum height according to ceiling height 18
5.1.1 Plenum's minimum height; (only plenum (B) must be used) 18
5.1.2 Adjustable height of the plenum; (with the plenum extension cut off (A)). 19
5.1.3 Adjustable height of the plenum (A and B); (without cutting) 79'' (200 cm) to 88'' (224 cm). 19
5.2 Assembling the hot air distribution plenum (A and B). 20
5.2.1 Assembling the plenum extension (A) by means of 12 screws and corner reinforcements 20
5.2.2 Assembling the plenum (B) 21
5.2.3 Assembling the plenum extension (A) to the plenum (B) 23
5.3 Installation of the assembled plenum on the furnace 24
5.4 Configuration and restrictions of hot air distribution system 25

0046- Appendix D6 (page 5 of 75)

5.4.1 Start-off plenum 25
5.4.2 Installing the start-off adapters 26
5.4.3 Minimum amount of outlets and maximum lengths of ducts 26
5.5 Air return system and filter 28
6 Combustion air 29
7 Electrical connection, adjustment of components and calibration of the draw 29
7.1 Raccordement électrique 29
7.2 Installation and connection of the “RTD” thermal probe 31
7.3 Blower technical Data 33
7.4 Draw Calibration 33
7.4.1 The use of a thermometer 34
Appendix 1: Optional thermostat installation 35
Appendix 2: Optional air filters (AC01390, AC01391) 37
Appendix 3: Optional Fresh air return adapter (AC01392) 38
PART 2 –OPERATION, MAINTENANCE AND TROUBLESHOOTING 39
7.5 How to prepare or buy good firewood 39
7.5.1 What is good firewood? 39
7.5.2 Tree species 39
7.5.3 Log length 39
7.5.4 Piece size 40
7.5.5 How to dry firewood 40
7.5.6 Judging firewood moisture content 41
8 Operating your furnace 41
8.1 Your first fires 41
8.2 Lighting fires 42
8.2.1 Conventional fire starting 42
8.2.2 The top down fire 42
8.2.3 Two parallel logs 43
8.2.4 Using fire starters 43
8.3 Maintaining wood fires 43
8.3.1 General advice 43
8.3.2 Raking charcoal 44
8.3.3 Firing each new hot load 44
8.3.4 Control of the air supply 45
8.3.5 Building different fires for different needs 46
8.3.6 Control of the air inlet damper 47
8.4 Additional fresh air supply 48

0046- Appendix D6 (page 6 of 75)

8.5 Manual or thermostat control 49
8.6 Ash drawer 49
8.7 Prolonged power outage 49
9 Maintaining your wood heating system 50
9.1 Furnace maintenance 50
9.1.1 Ash removal 50
9.1.2 Cleaning door glass 50
9.1.3 Door adjustment 51
9.1.4 Replacement of the glass and gaskets 52
9.1.5 Cleaning and painting the furnace 53
9.1.6 Heat exchangers care 54
9.2 Chimney and chimney connector maintenance 57
9.2.1 Why chimney cleaning is necessary 57
9.2.2 How often should you clean the chimney? 57
9.2.3 Cleaning the chimney 58
9.3 Smoke pipe inspection 58
9.4 Blower motor maintenance 58
10 Troubleshooting 59
10.1 Installation of secondary air tubes and baffle 60
11 Exploded diagram and parts list 62
PART 3 – FEATURES AND SAFETY 65
12 General information on HeatPro (DF03000) 66
12.1 Appliance performance (1) 66
12.2 General Features 67
12.2.1 Technical data HeatPro 68
12.3 The benefits of low emissions and high efficiency 70
12.4 The SBI commitment to you and the environment 70
12.4.1 What is your new furnace made of? 70
13 Safety information 71
13.1 Cautions and warnings 71
13.2 Smoke detector 73
13.3 Chimney fire 73
DROLET LIMITED LIFETIME WARRANTY 74

0046- Appendix D6 (page 7 of 75)

PART 1 – INSTALLATION

Please see **Part 2** for operation, maintenance and troubleshooting instructions.

Please see **Part 3** for features and safety instructions.

INTRODUCTION

This furnace uses the same wood burning technology as a high efficiency certified CSA B415.1-10. This model meets the emissions limits of CSA B415.1-10 Standard.

- We recommend that our woodburning hearth products be installed and serviced by professionals who are certified in the United States by NFI (National Fireplace Institute®) or in Canada by WETT (Wood Energy Technical Training) or in Quebec by APC (Association des Professionnels du Chauffage).

BEFORE STARTING THE INSTALLATION, READ ALL THE INSTRUCTIONS BELOW AND MAKE SURE YOU UNDERSTAND THEM. (IF IN DOUBT, CONTACT OUR CUSTOMER SERVICE AT TECH@SBI-INTERNATIONAL.COM). FAILURE TO COMPLY WITH THESE INSTRUCTIONS MAY RESULT IN HAZARD TO YOUR SAFETY AND WILL AUTOMATICALLY VOID THE WARRANTY.

Inspect the furnace to make sure that nothing has been damaged in the shipping. Pull out the tools from the flue pipe and/or exchangers and firebox of the furnace.

IMPORTANT NOTE

FOR, INSTALLATION OF A CENTRAL HEATING VENTILATION SYSTEM, IT IS HIGHLY RECOMMENDED TO CONSULT A HEATING SYSTEM VENTILATION SPECIALIST.

N.B.: STOVE BUILDER INTERNATIONAL INC. IS NOT RESPONSIBLE FOR POOR APPLIANCE PERFORMANCES, DUE TO IMPROPER INSTALLATION OF EXHAUST SYSTEM OR DUCTING.

0046- Appendix D6 (page 8 of 75)

1 Regulations and safety warnings covering installation

1.1 Regulations covering furnace installation

CAUTION

FOLLOW LOCAL CODES (IF IN DOUBT, CONTACT YOUR LOCAL HEATING APPLIANCE RETAILER, YOUR MUNICIPALITY OR YOUR FIRE DEPARTMENT

Installation must be made in accordance with the following standards;

Canada: CSA-B365 - Installation code for solid-fuel-burning appliances and equipment. CSA C22.1 - Canadian electrical code.

United-States: NFPA 90B - Standard for the installation of warm air heating and air-conditioning systems. NFPA 70 - National Electrical Code.

1.2 Cautions and warnings covering installation

- **THE INFORMATION GIVEN ON THE CERTIFICATION LABEL AFFIXED TO THE APPLIANCE ALWAYS OVERRIDES THE INFORMATION PUBLISHED, IN ANY OTHER MEDIA (OWNER'S MANUAL, CATALOGUES, FLYERS, MAGAZINES AND/OR WEB SITES).**
- **AIR DUCTS SERVING A GARAGE SHOULD NOT BE CONNECTED TO OTHER PARTS OF A HOUSE AND THE DUCTING SERVING A HOUSE SHOULD NOT BE CONNECTED TO A GARAGE.**
- **MIXING OF CHIMNEY COMPONENTS FROM DIFFERENT SOURCES OR MODIFYING FURNACE COMPONENTS MAY RESULT IN HAZARDOUS CONDTIONS. WHERE ANY SUCH CHANGES ARE PLANNED, FURNACE BUILDER INTERNATIONAL INC. SHOULD BE CONTACTED IN ADVANCE.**
- **ANY MODIFICATION OF THE APPLIANCE THAT HAS NOT BEEN APPROVED IN WRITING BY THE TESTING AUTHORITY VIOLATES CSA B365 (CANADA), AND NFPA 90B (USA).**
- **CONNECT THIS FURNACE ONLY TO A LISTED UL 103 HT OR ULC S629 FACTORY-BUILT CHIMNEY FOR USE WITH SOLID FUEL OR TO A LINED MASONRY CHIMNEY CONFORMING TO NATIONAL AND LOCAL BUILDING CODES.**
- **IF REQUIRED, A SUPPLY OF COMBUSTION AIR SHALL BE PROVIDED TO THE ROOM OR SPACE.**
- **DO NOT STORE NEAR WOOD FURNACE. RESPECT THE PRESCRIBED CLEARANCE BETWEEN COMBUSTIBLES AND HEAT.**
- **DO NOT CONNECT THIS UNIT TO A CHIMNEY FLUE SERVING ANOTHER APPLIANCE.**
- **DO NOT INSTALL IN A MOBILE HOME.**
- **DO NOT INSTALL IN ALCOVE.**

0046- Appendix D6 (page 9 of 75)

2 Authorized and non-authorized configuration

2.1 Authorized configurations in Canada and United States

The wood furnace is the only appliance connected to the hot air distribution duct system and air return duct system.

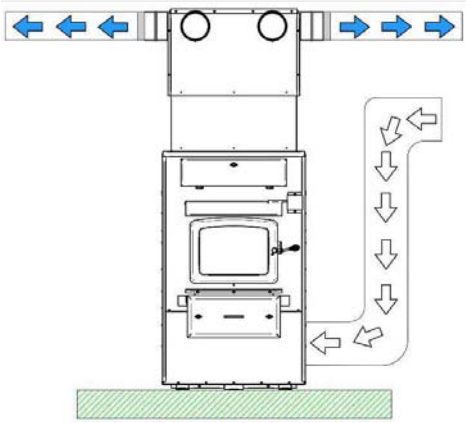

2.2 Authorized configurations in United States only

Parallel installation :

- **(A)** represents the wood furnace.
- **(B)** represents the gas, oil or electric existing furnace.
- Power input **(B)** should be equal to or greater than **(A)**.
- Each furnace must have its own air return duct system.
- The highest clearances of **(A and B)** and hot air distribution and air return ducts of must be respected.
- Static pressure of **(A)** must be adjusted to 0.20 in. W.C. (50 Pa).

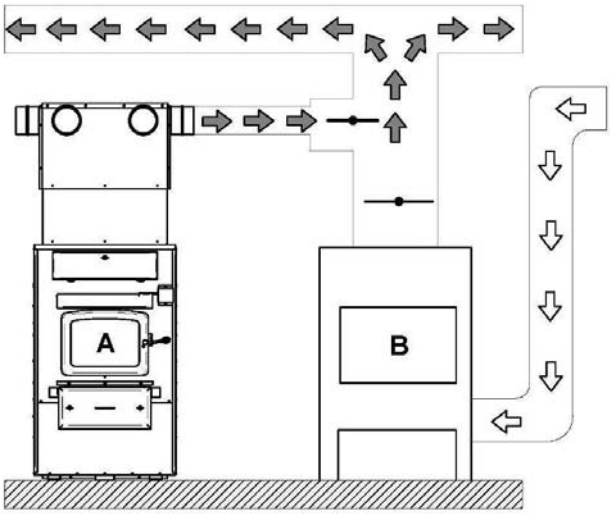

0046- Appendix D6 (page 10 of 75)

2.3 Non-authorized configuration, Canada and United States

- The hot air duct **(A)** must not be installed in the air return of **(B)**.
- The hot air duct **(B)** must not be installed in the air return of **(A)**.

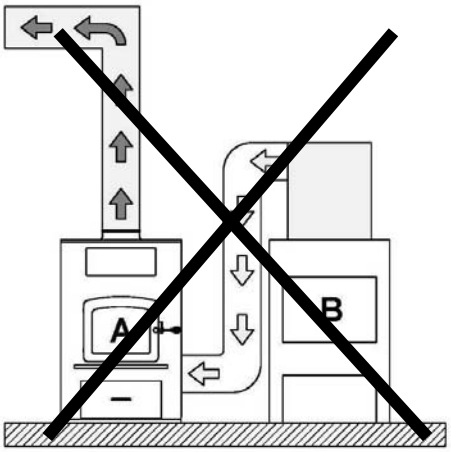

3 Setting up the unit and clearances

To reduce the risk of vibration, the furnace must be leveled in both directions and supported evenly to ensure stability.

3.1 Unit location

The furnace must be installed in a location:

- Where outside air supply will be sufficient for proper combustion.
- Where connector is as short as possible in order to minimize the use of 90° elbows and horizontal lengths;
- That ensure a proper installation and safe operation of the appliance;
- Where the owner can ensure cleanliness of the room in the event of negative pressure or temporarily negative.
- Where room to perform maintenance is sufficient and safe.

3.2 Certification label

N.B.: THIS APPLIANCE MUST BE INSTALLED IN ACCORDANCE WITH THE INSTRUCTIONS ON THE CERTIFICATION LABEL APPLIED ON THE UNIT.

Location: You will find the certification label on the back of the appliance.

Information found on the certification label always overrides the information published in any other publication.

Content of certification label: Model number, serial number, certification agency, Standards, clearances to combustible material, as well as the main safety cautions.

0046- Appendix D6 (page 11 of 75)

3.3 Clearances to combustible material

The clearances shown in this section have been determined by safety tests under normal and even abnormal operating conditions according to procedures set out in standards CSA B366.1 (Canada) and UL 391 (U.S.A.). Respecting the minimum clearances is mandatory to prevent risk of fire.

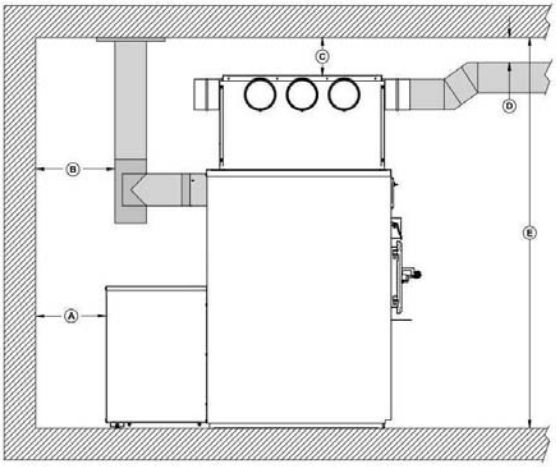

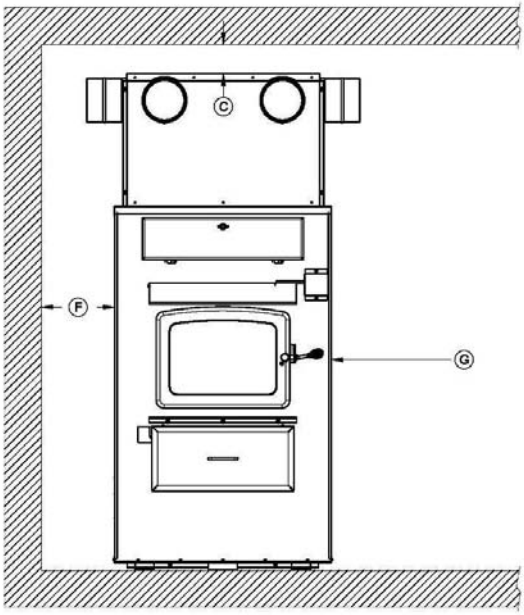

0046- Appendix D6 (page 12 of 75)

3.3.1 Clearances with single and double wall pipe

	CANADA	USA
A	12" (305 mm)	12" (305 mm)
B	18" (457 mm)	18" (457 mm)
C	5" (127 mm)	5" (127 mm)
D	1" (25 mm)	1" (25 mm)
E	72" (183 cm) minimum	72" (183 cm) minimum
F	8" (203 mm)	8" (203 mm)
G*	24" (610 mm)	24" (610 mm)

Required for maintenance or replacement of components, however a 30" (762 mm) clearance is suggested.

3.3.2 Cold air return ductwork Clearances

The cold air return system can be connected to a new or to an existing cold air return ductwork. In both cases, the minimum clearance to combustible material is 0**"** (0 mm).

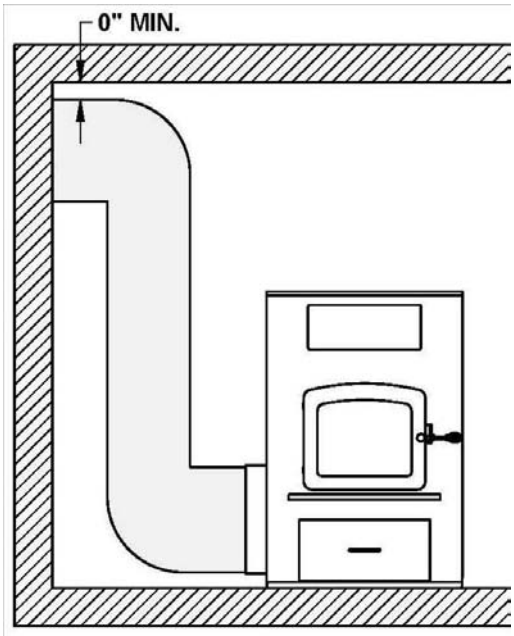

0046- Appendix D6 (page 13 of 75)

3.3.3 Floor protection

- If the floor is made of non combustible material, no floor protector is required.
- If the floor is made of combustible material, a floor protector is required (see table below).

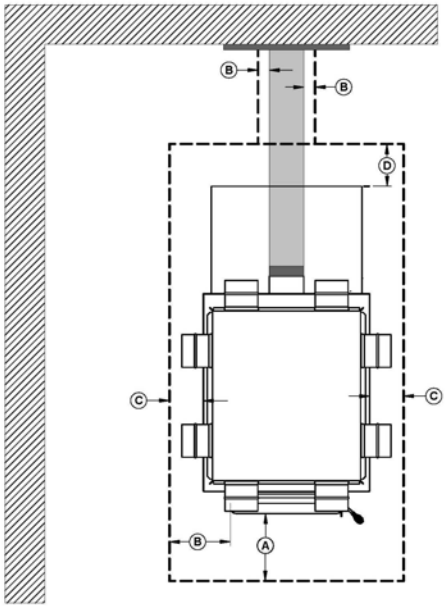

	FLOOR PROTECTION*	
	CANADA	**USA**
A	18" (457 mm) From door opening	16" (406 mm) From door opening
B	N/A (USA only)	8" (203 mm) From door opening
C	8" (203 mm)	N/A (Canada only)
D	8" (203 mm) – Note 1	N/A (Canada only)
E	N/A (USA only)	Note 2

**Steel with a minimum thickness of 0.015" (0.38 mm) or ceramic tiles sealed together with grout. No protection is required if the unit is installed on a non-combustible floor (ex: concrete).*

Note 1: The floor protection at the back of the furnace is limited to the furnace's required clearance (A) if such clearance is smaller than 8**"** (203 mm).

Note 2: Only required under the horizontal section of the connector. Must exceed each side of the connector pipe by at least 2**"** (51 mm).

0046- Appendix D6 (page 14 of 75)

4 The venting system

WARNING:

DO NOT INSTALL A MANUAL DAMPER ON THIS FURNACE.

CAUTION: BEFORE THE CONNECTOR PIPES ARE INSTALLED, MAKE SURE THAT THE EXHAUST PIPE AND / OR THE EXCHANGERS OF THE FURNACE ARE FREE OF ALL ITEMS.

4.1 The chimney

- The furnace must be connected to a factory-built metal chimney that complies with UL 103 HT (USA) or ULC S629 (Canada).
    - Strongly recommended inner diameter**:** 6" (152 mm).
    - A chimney having a diameter of more than 7**″** (178 mm) is permitted, if it allows the proper venting of combustion gases and that such application is verified and authorized by a qualified installer. Otherwise, the diameter of the flue must be reduced to 6**″** (152 mm) by the use of a stainless steel liner made for this purpose.

4.1.1 Factory-built metal chimneys

To be suitable, a factory-built metal chimney also called “high temp” chimney, must comply with UL 103 HT (U.S.A.) or ULC S629 (Canada).

- Use only components intended for the brand and model of the chimney you are using.
- Never substitute parts from other chimney brands.
- Never fabricate your own components.
- The chimney must be a type suitable for solid fuel.
- To be safe and effective, the chimney must be installed exactly in accordance with the manufacturer’s instructions.

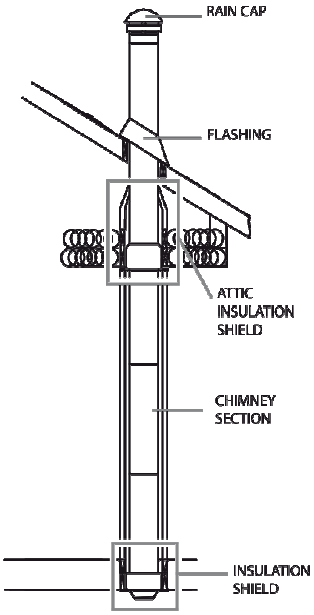

0046- Appendix D6 (page 15 of 75)

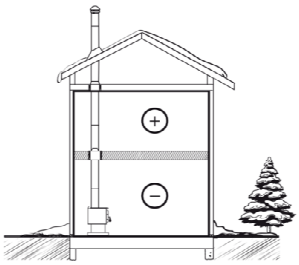

Good system design

Inside chimneys are preferred because even when no fire is burning, there is normally upward flow in the system.

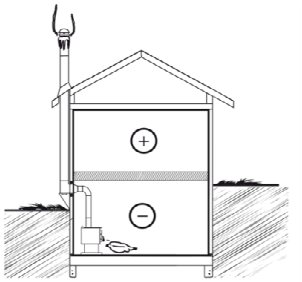

Inferior system design

Outside chimneys are a problem because when no fire burns they will go into cold backdraft if the furnace is installed low in the house.

4.1.2 Masonry chimneys

The furnace may also be connected to a masonry chimney, provided the chimney complies with the construction rules found in the building code enforced locally.

- The chimney must have a clay liner.
- If the masonry chimney has a square or rectangular liner that is larger in cross-sectional area than a round 6″ (152 mm) flue, it should be relined with a suitably listed 6″ (152 mm) stainless steel liner.
- When passing through a combustible wall, the use of an insulated listed thimble is required.
- If a stainless steel jacket (liner) is to be installed, it must extend 12″ (305 mm) to 18″ (457 mm) above the top of the masonry chimney to favor the draw.

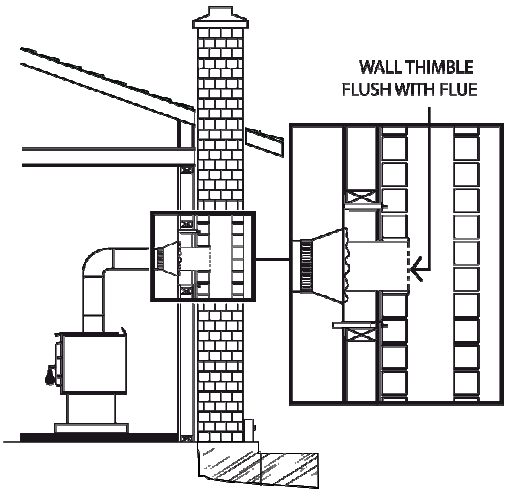

0046- Appendix D6 (page 16 of 75)

4.1.3 Minimum chimney height

The top of the chimney should be tall enough to be above the air turbulence caused when wind blows against the house and its roof.

- The chimney must extend at least 3 ft. (1 m) above the highest point of contact with the roof.
- Extend at least 2 ft. (61 cm) higher than any roof line or obstacle within a horizontal distance of 10 ft. (3 m).

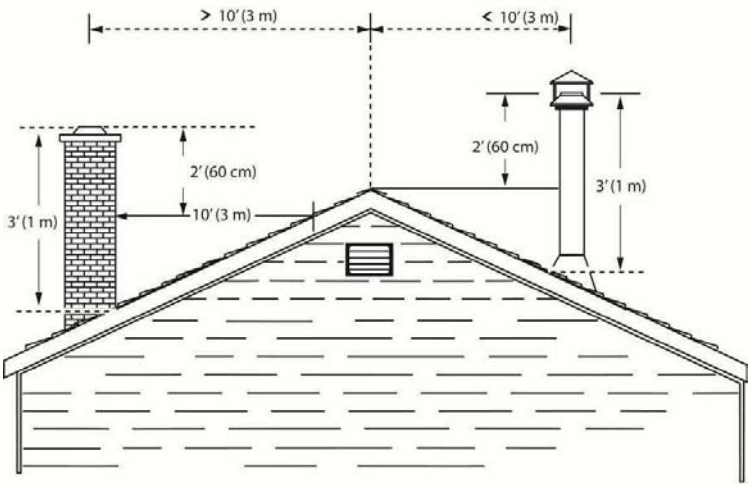

4.2 The connector pipe

- Recommended inner diameter : 6" (152 mm).
- If an increaser/reducer must be used (max 6" (152 mm) to 7" (178 mm)), it must be installed as close as possible the chimney.

4.2.1 Best practices and requisites of the installation code

- Where passage through a wall or partition of combustible construction is desired, the installation shall conform to CAN/CSA-B365, Installation Code for Solid-Fuel-Burning Appliances and Equipment;
- A flue pipe must never pass through a combustible floor or ceiling or through an attic, roof space, closet or concealed space;
- Minimum upward slope towards the chimney: 1/4 in/ft. (20 mm/m);
- The maximum horizontal run is 10' (3 m). Do not count the starting elbow;
- All flue pipe joints must be secured with three screws. Failure to secure them to each other may cause a fire;

0046- Appendix D6 (page 17 of 75)

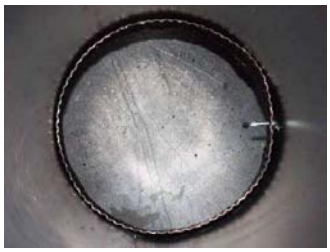

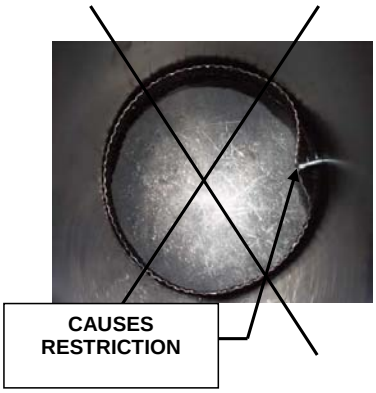

Proper installation **improper installation**

- Maximum unsupported horizontal length: 3 feet (1 m);
- Galvanized flue pipes must not be used because the coatings vaporize at high temperatures and release dangerous gases;
- Flue pipes must be at least 24 gauge in thickness;
- The chimney connector must be in good condition;
- Flue pipe joints should overlap 1 1/4**"** (30 mm);
- Straight up installations need to have either a connector where one end has no fastener or a telescopic length;
- Removal of the assembly for cleaning should not require that the furnace be moved;
- The male ends of the sections must be oriented towards the appliance so that falling dust and condensation stay inside the pipe;
- A straight flue pipe assembly offers the least restriction to gas flow and results in stronger draft. Straight assemblies also need less maintenance because there are no corners to collect creosote;
- The use of 45° elbows is strongly recommended;
- A 90° elbow = 5' (152 cm), a 45° elbow = 2.5' (76 cm);
- Never use more than two 90° elbows.

0046- Appendix D6 (page 18 of 75)

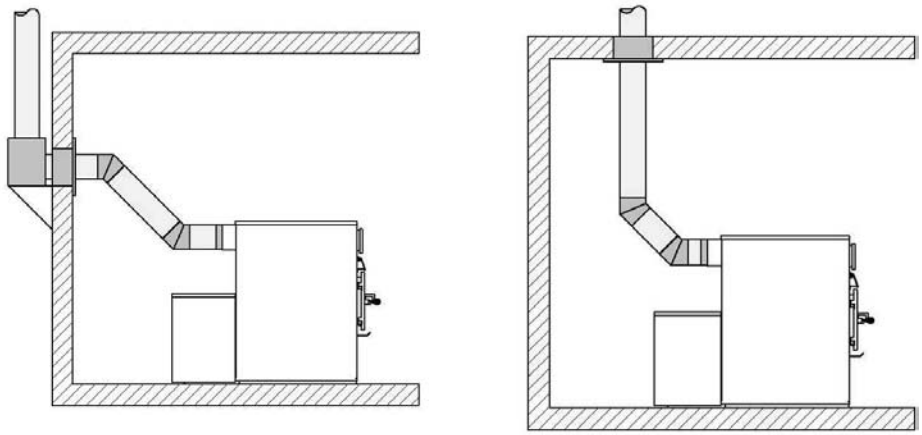

Use 45° elbows where possible, rather than 90° elbows.

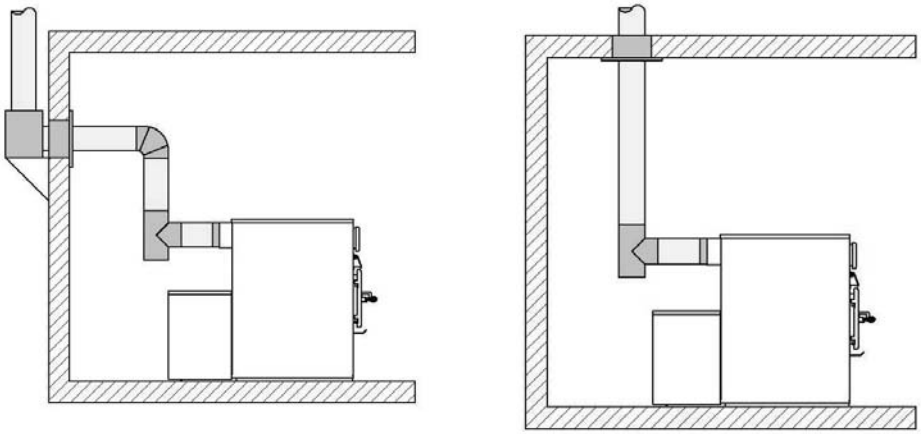

Alternative installations with 90° elbow or tee.

5 Hot air distribution and air return system

The Drolet furnace is designed and equipped with a hot air distribution plenum that may receive 6 to 10, 6" (152 mm) diameter round ducts.

The installer is responsible for the performance of the distribution ducts and the air return system. It will have a direct effect on the ability of the blower to distribute heat efficiently throughout the house. The number, size and length of the ducts of the distribution system and return air will vary depending on the configuration and characteristics of each house.

0046- Appendix D6 (page 19 of 75)

N.B.: The furnace air jacket is not totally airtight. It is normal to detect some air leaks at the jacket's joints.

Components provided with the furnace:

10 hot air start-off adapter **(A)**	4 lids **(B)**	Type A #10 black screws **(C)**	#10 selt-taping black screws **(D)**

5.1 Hot air distribution plenum height according to ceiling height

Remember to take into account the 5" (127 mm) clearance to combustibles above the plenum.

5.1.1 Plenum's minimum height; (only plenum (B) must be used)

For a minimum ceiling height of 72**"** (183 cm).

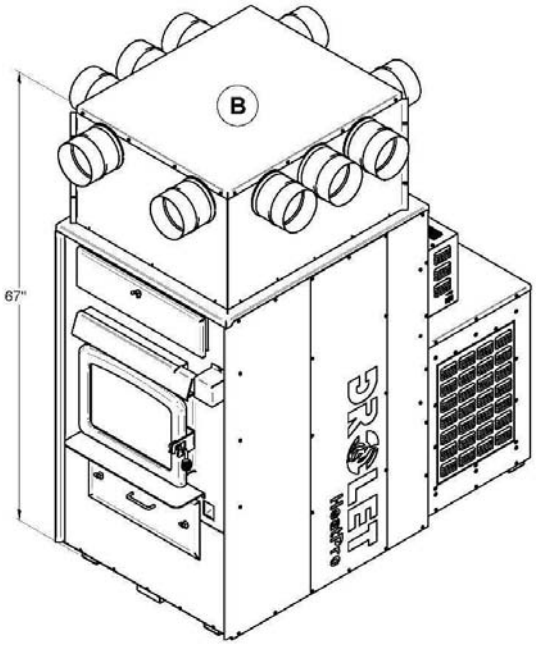

0046- Appendix D6 (page 20 of 75)

5.1.2 Adjustable height of the plenum; (with the plenum extension cut off (A)).

When the ceiling height, measured from the floor is greater than 72″ (183 cm), but less than 84″ (213 cm), it will be possible to cut the plenum extension **(A)** of at most 10″ (254 mm). The plenum extension **(A)** must therefore have a minimum height of 14" (356 mm).

Warning: The plenum extension **(A)** should not obstruct the openings for the hot air distribution of the plenum **(B)**. The shaded area represents the **maximum** cutting of plenum extension **(A)**.

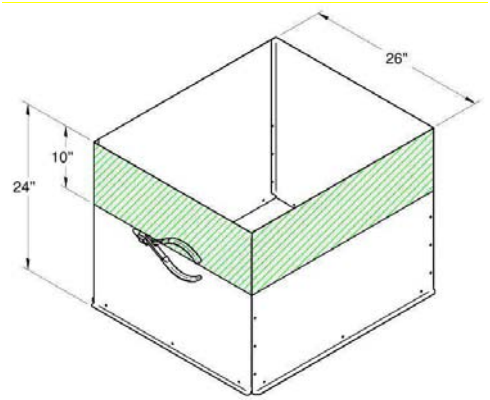

5.1.3 Adjustable height of the plenum (A and B); (without cutting) 79″ (200 cm) to 88″ (224 cm).

For ceiling height greater than 84″ (213 cm).

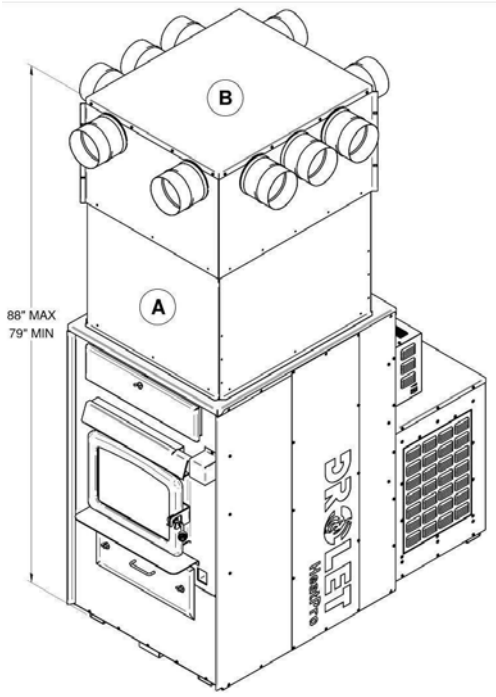

0046- Appendix D6 (page 21 of 75)

5.2 Assembling the hot air distribution plenum (A and B).

5.2.1 Assembling the plenum extension (A) by means of 12 screws and corner reinforcements

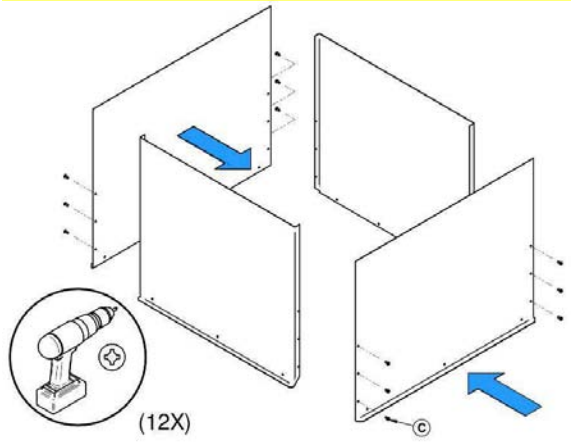

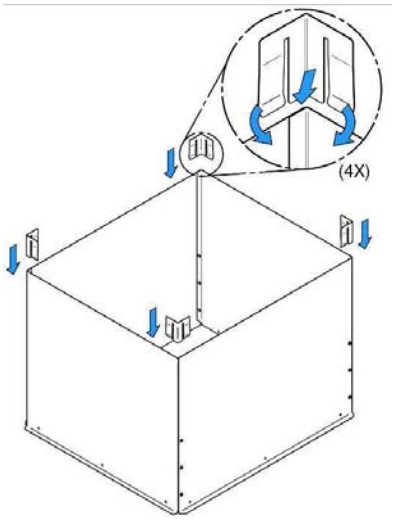

0046- Appendix D6 (page 22 of 75)

5.2.2 Assembling the plenum (B)

Insert the male end of each panel in the female part of the adjacent panel.

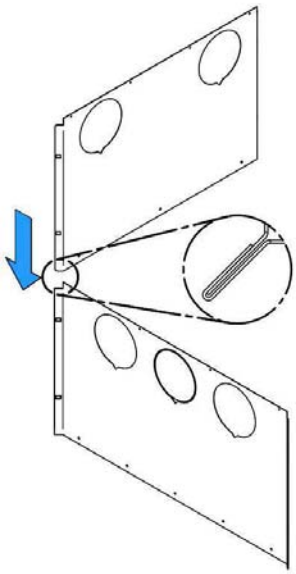

Secure the assembly by bending the two metal tabs in the center of each corner.

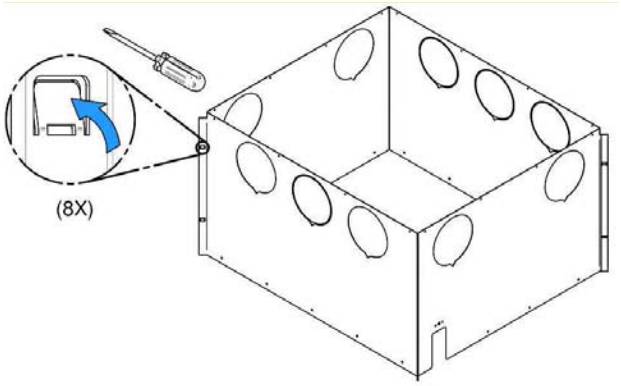

0046- Appendix D6 (page 23 of 75)

Install the cover on the part (B) of the assembly and secure it with 16 screws.

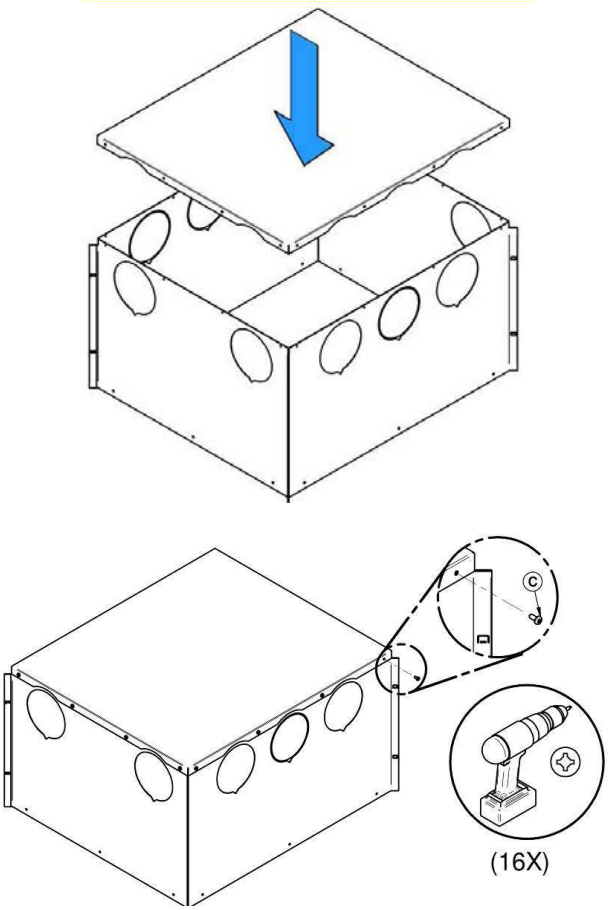

0046- Appendix D6 (page 24 of 75)

5.2.3 Assembling the plenum extension (A) to the plenum (B)

Slide plenum **(B)** over the plenum extension **(A)** to the extent determined in **Section 5.1**.

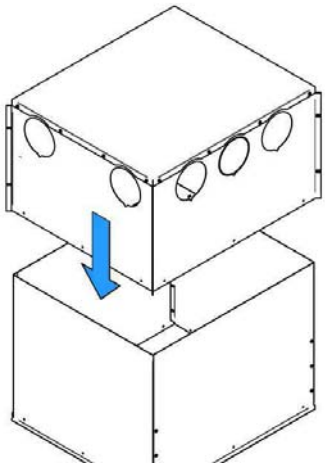

Using 12 self-drilling screws, secure the plenum **(B)** to the plenum extension **(A)**.

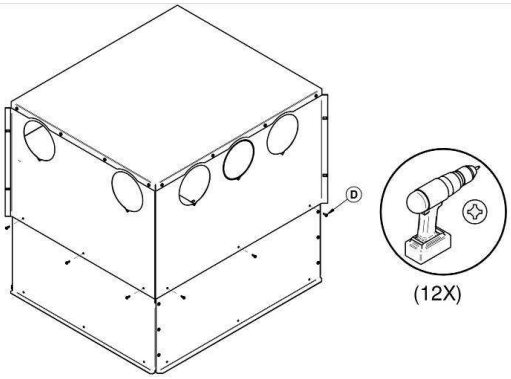

0046- Appendix D6 (page 25 of 75)

5.3 Installation of the assembled plenum on the furnace

Identify the rear side of the plenum, it is provided with holes for the installation of the “RTD” thermal probe.

Also, four holes are aligned with the fold of the top of the furnace at the rear side and three holes on the front side. This allows you to secure the plenum properly.

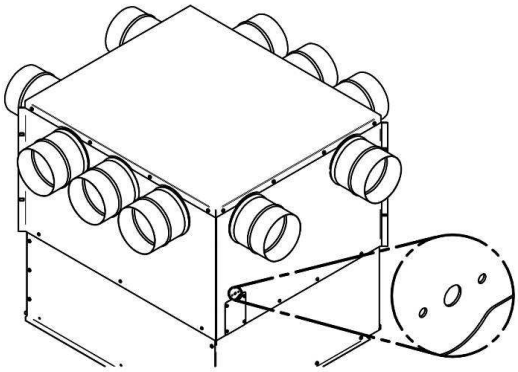

Install the assembly on the furnace, taking care to insert the 4 fold on top of the furnace **inside** the plenum.

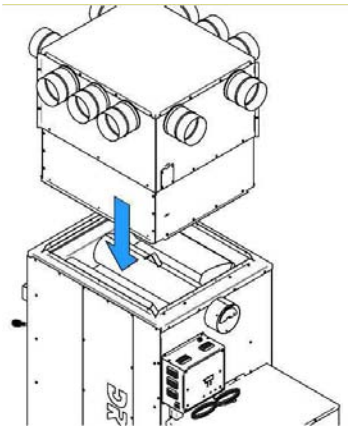

Using 13 screws, secure the plenum to the furnace.

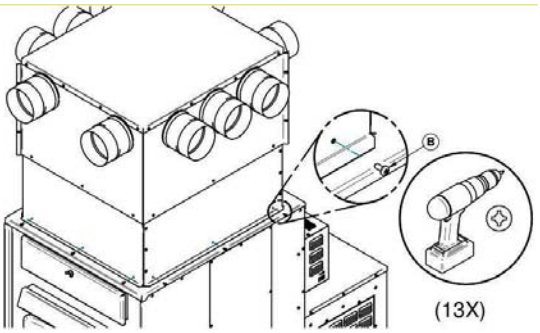

0046- Appendix D6 (page 26 of 75)

5.4 Configuration and restrictions of hot air distribution system

5.4.1 Start-off plenum

- The plenum can be adjusted from 67″ (170 cm) to 88″ (224 cm) depending on the ceiling height. See **Section 5.1:** ***Hot air distribution plenum height according to the ceiling height.***
- The start-off plenum must have a minimum height of 18″ (457 mm) from the top of the furnace **(X)**. In this case, use only the upper section of the plenum (the one with the 10 openings).
- The minimum clearance **(C)** between the top of the plenum and the ceiling is 5″ (127 mm).
- The ducts minimum clearance **(D)** to combustible materials is 1″ (25 mm).
- The ducts may pass through a combustible wall maintaining a clearance of 1″ (25 mm) around ducts.

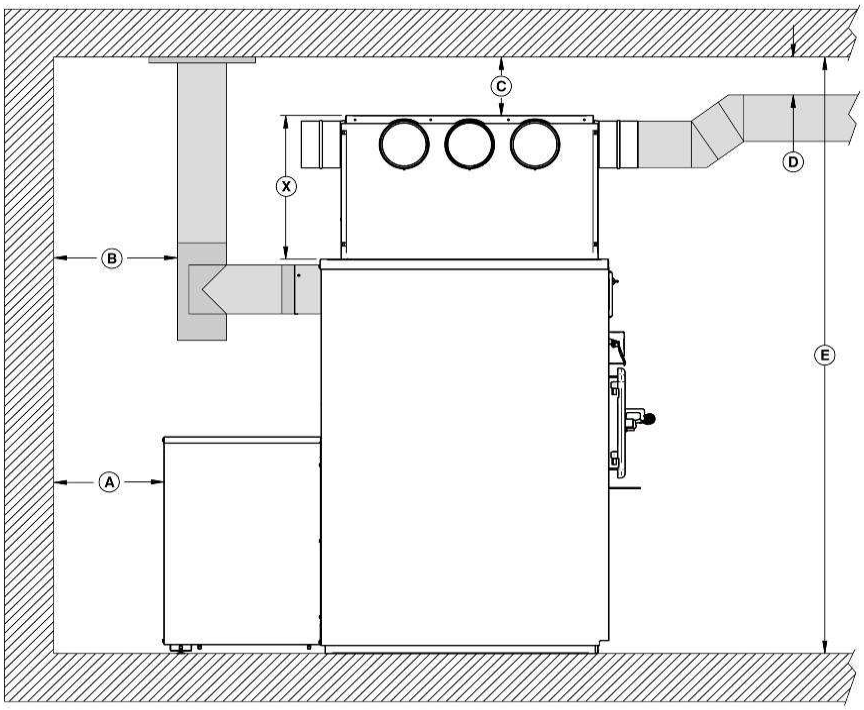

0046- Appendix D6 (page 27 of 75)

5.4.2 Installing the start-off adapters

After choosing your output configuration, do the following to install the start-off adapters.

Warning: Use gloves to complete the following steps because the start-off adapters and caps can be sharp.

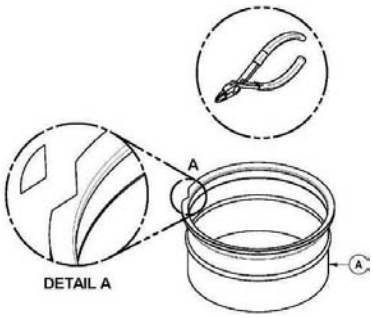

1- Cut a notch in the flange of the adapter **(A)** and slightly fold down one side of the flange to facilitate the installation.

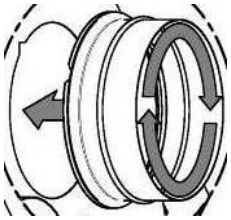

2- Align the notch previously made on the adapter **(A)** with the one of the hot air outlet on the plenum, and then turn the adapter until the flange is completely inserted and rotates freely. Repeat the above procedure for the other adapters.

5.4.3 Minimum amount of outlets and maximum lengths of ducts

- A minimum of 6 start-off adapters must be installed on the start-off plenum. The location of the adapters has no impact on the distribution of air.

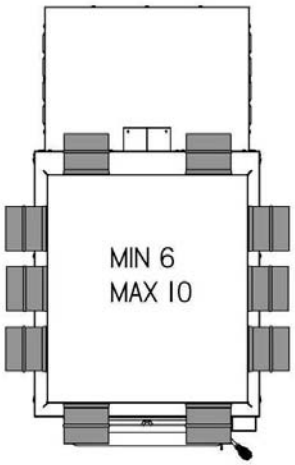

0046- Appendix D6 (page 28 of 75)

- Block the unused outlets with the block-off caps **(B)** and provided screws **(D)**.

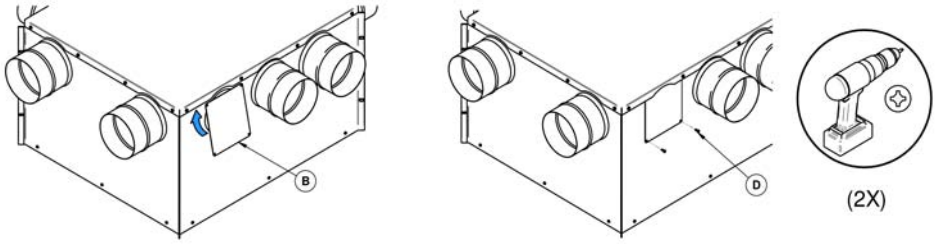

FAVOR THE USE RIGID DUCTS BECAUSE THERE ARE LESS RESTRICTIVE TO AIR FLOW.

- The maximum run of a main duct is 35’ (10.7 m). It must be reduced from 6**″** (152 mm) to 5**″** (127 mm) after 20' (6.1 m) or reduce the main duct by 1**″** (25 mm) at every two secondary duct outputs.
- The maximum length of all the main ducts is 180’ (54.9 m).
- The maximum run of a secondary duct is 10’ (3 m).
- The maximum length of all the secondary ducts is 100’ (30 m).
- The finishing grill at the output of a secondary pipe must be made of metal.

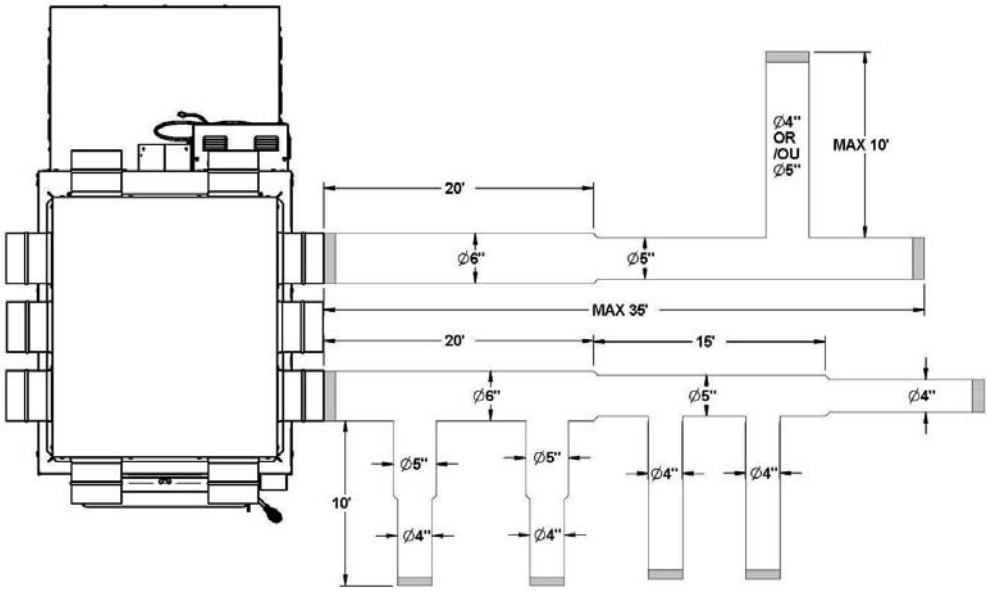

The total area of secondary duct outlets must be equal or slightly less than the total area of the outlets used on the distribution plenum **(B)**.

0046- Appendix D6 (page 29 of 75)

Example of surface calculation according to the number of outlets used in the plenum:

Diameter of plenum outlets (in)	Surface of plenum outlets (in^2)	Number of outlets on the plenum	Total surface of plenum outlets used (in^2)
6	28	6	170

The acceptable total area of secondary outlets would therefore be:

Diameter of secondary outlets (in)	Surface of secondary outlets (in^2)	Number of secondary outlets	Total surface of secondary outlets used (in^2)
4	12.5	9	112.5
5	19.5	1	19.5
6	28	1	28
The total area of the secondary outlets of this system would be acceptable because it is equal to or slightly less than the total area of the plenum outlets.			160

ACCORDING TO THE NATIONAL BUILDING CODE, THE BTU/H PROVIDED BY AN OUTLET ON THE PLENUM MUST NOT EXCEED 10,250 BTU/H (3kW) AND THE HOT AIR TEMPERATURE AT THE OUTLET OF A SECONDARY DUCT SHOULD NOT EXCEED 158 °F (70 °C).

Once your hot air distribution system is installed, make sure to measure the static pressure in the start-off plenum. Adjust the opening at the end of each of distribution duct with a shutter until you get a static pressure 0.2**″** W.C. (50 Pa) at the plenum.

The default blower speeds can be changed depending on the restriction created by the configuration of your distribution system (see **Section 7.3: *Blower technical Data***).

5.5 Air return system and filter

The installation of an optional air return duct connected to the blower housing will improve the air circulation throughout the house (see **Appendix 3: *Optional Fresh air return adapter (AC01392)***). The use of the air filter option is also recommended. The filter option will significantly reduce dust circulation within the hot air duct and will prevent obstruction of the blower (see **Appendix 2: *Optional air filters (AC01390, AC01391)***).

0046- Appendix D6 (page 30 of 75)

6 Combustion air

CAUTION

WARNING: SUFFICIENT COMBUSTION AIR MUST BE AVAILABLE AT ALL TIMES; LACK OF COMBUSTION AIR CONSTITUTES A DANGER.

A CARBON MONOXIDE (CO) DETECTOR/ALARM IS REQUIRED IN THE ROOM IN WHICH THE FURNACE IS INSTALLED.

A fresh air supply may be necessary to prevent solid fuel units from rejecting products of combustion into the house.

Additional combustion air can be provided following the following methods, provided that they satisfy chapter 4 of the **CSA B365 standard for Canada**:

- **Direct combustion air supply:**
  - **The HeatPro is not certified** to be connected directly to a new combustion air supply.
- **Indirect combustion air supply:**
  - New combustion air can be brought into a pipe located within approximately 12″ (305 mm) of the unit. If the pipe is too close to the furnace, it may interfere with its operation;
  - The recommended diameter of the outside air intake pipe is 4″ (102 mm);
  - Mechanical ventilation system: if the house is equipped with a ventilation system (air exchanger or heat recovery), the ventilation system may provide sufficient auxiliary air to the solid fuel unit. Otherwise, the owner should be informed that the ventilation system may have to be rebalanced by a ventilation technician after the installation of the solid fuel unit;

7 Electrical connection, adjustment of components and calibration of the draw

The furnace is fully assembled at the factory and no electrical connection is required other than plugging the power cord into an outlet.

7.1 Raccordement électrique

The following instructions do not replace those of the local code.

Installation and verification of this appliance must be done by a qualified person.

All wiring from the service panel to the heating unit must comply with the electrical code in force and all local regulations. It is recommended to feed the furnace with its own electrical circuit of 15 amps at 120 volts with a breaker (see wiring diagram).

WARNING

ONLY USE WIRES SUITABLE FOR 167 °F (75 °C) OR MORE.

0046- Appendix D6 (page 31 of 75)

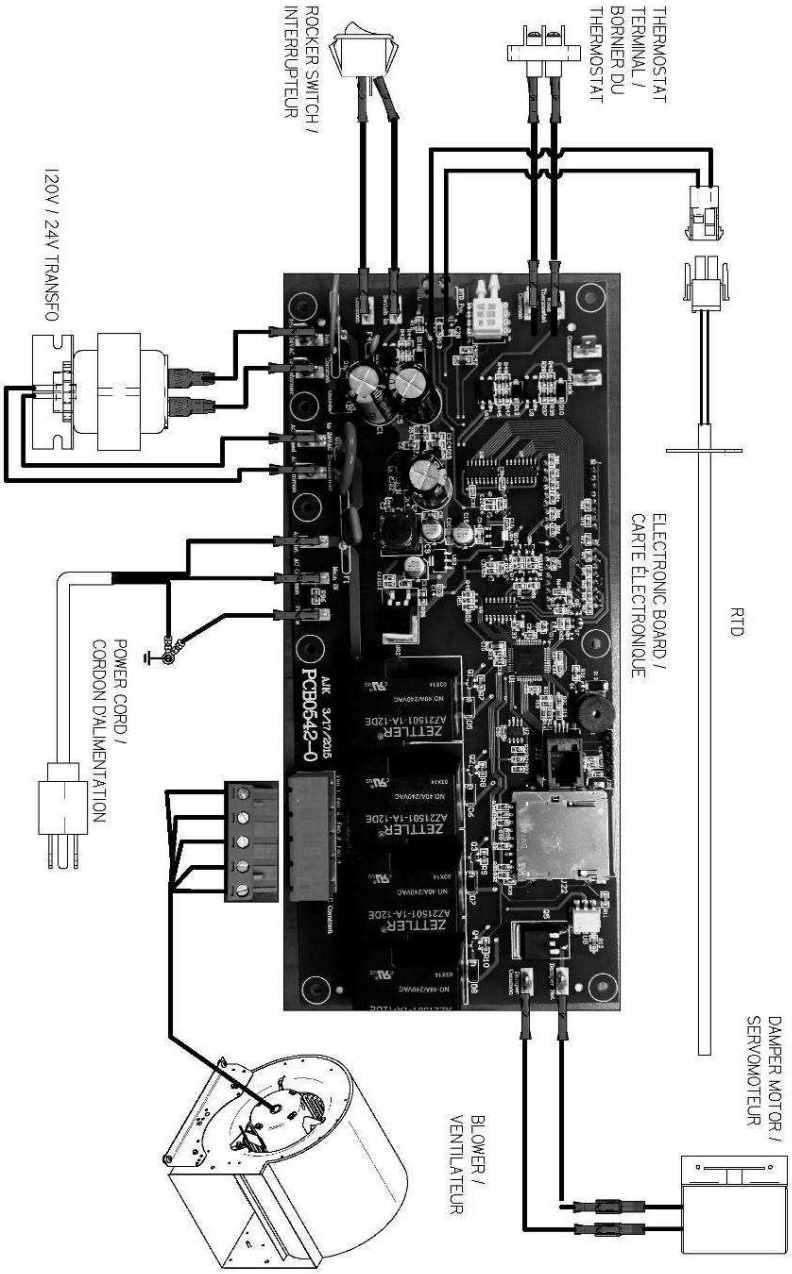

0046- Appendix D6 (page 32 of 75)

7.2 Installation and connection of the “RTD” thermal probe

IMPORTANT: The proper positioning of the “RTD” thermal probe is essential to the proper functioning of the furnace. Install it in the opening provided for this purpose on the start-off plenum.

With the plenum extension (A) and the plenum (B)

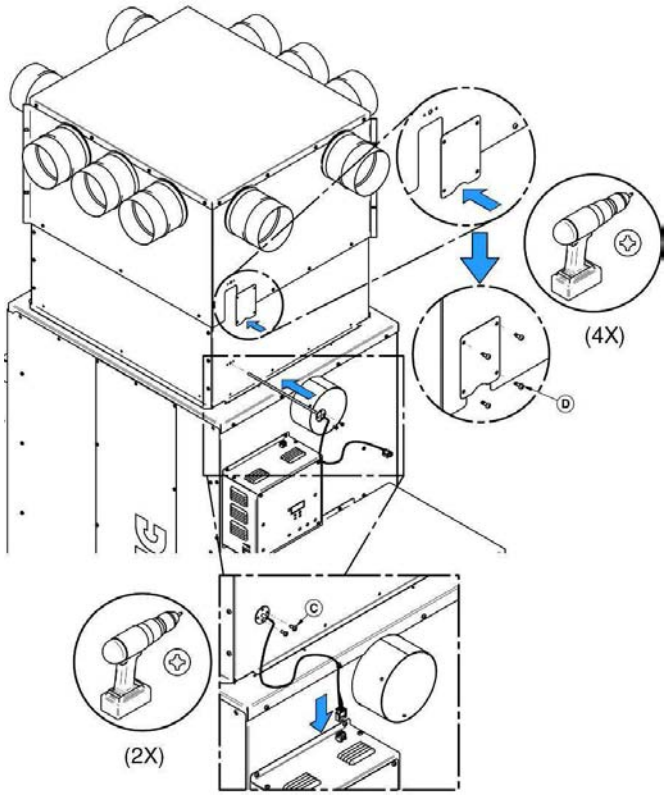

With 4 self-taping screws **(D)**, install the metal plate on the plenum **(B)** to block-off the 3 holes. Make sure the notch towards the bottom.

Install the RTP probe in the plenum extension **(A).**

Secure the RTD probe with the two screws provided **(C)**.

Connect the RTD probe on the furnace with the connection.

0046- Appendix D6 (page 33 of 75)

With plenum (B) only

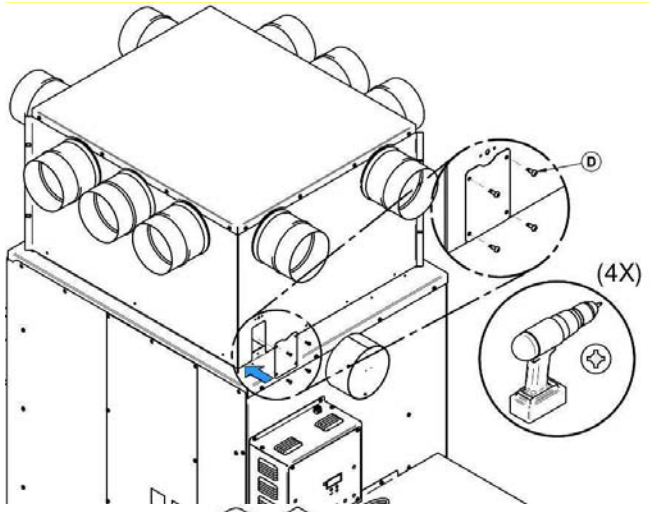

Using four self-drilling screws **(D)**, install the plate supplied with the furnace on the plenum **(B)**. Make sure to have the notch on the plate up.

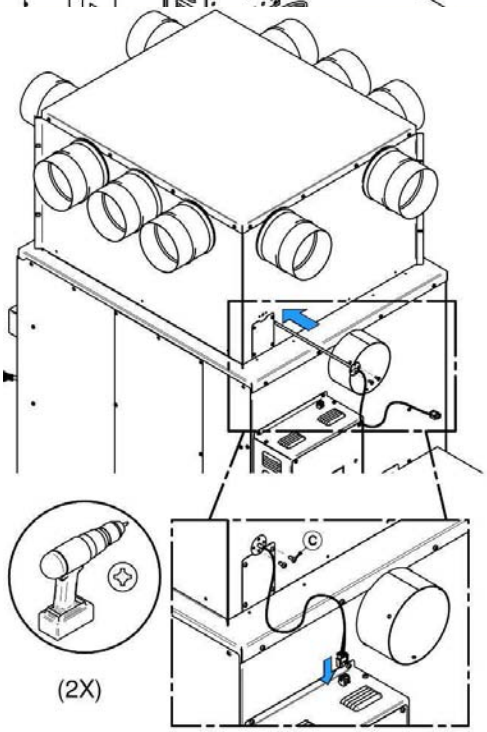

Install the RTD probe in the hole of the plenum **(B)**.

Secure the RTD probe with two screws **(C)**.

Connect the RTD probe to the furnace with the connector.

0046- Appendix D6 (page 34 of 75)

7.3 Blower technical Data

The blower speed must conform to the recommendations of the Warm Air Heating and Air Conditioning National Association and should respect the static pressure ranges in the warm air plenum of the furnace**.**

MODEL	(DIRECT DRIVE)			FLOW	TEMP VAR.	BTU/H	STATIC PRESSURE	OPTIONAL FILTER
	VENT	MOT.	VIT.	(CFM)	(°F)	(WOOD)	INCH OF W.C.	(IN)
HEATPRO	DD-10	1/3	4	1900	135	180,000	0,2	20″ x 15″ x 1″

Blower speed	Static pressure (in. WC) / (Pa)	Flow (CFM)
1	0.2 / 50	1136
2	0.2 / 50	1686
3	0.2 / 50	1790
4	0.2 / 50	1900

Volts	Amps	Max Amps	Hertz	Watts
120	3.6	5.0	60	432

7.4 Draw Calibration

The draw: The measurement is taken in the exhaust pipe 18″ (457 mm) above the furnace's flue collar with a tube and a pressure gauge (manometer).

- **Poor**: **-0.03" W.C. (7.5 Pa) and under**: ignition problems, risk of smoke spillage, low performance of heat exchangers.
- **Ideal**: **from -0.04" to -0.06" W.C. (10 to 15 Pa)**: To obtain the optimum performance of the furnace.
  - A barometric draft control is not required.
- **Excessive**: **-0.08" W.C. (20 Pa)** : **WARNING**

  This leads to premature wear of the furnace, a situation that is not covered by warranty.
  - A draw greater than -0.08" W.C. (20 Pa) leads to uncontrollable fire even if the air control is in closed position.
  - To prevent excessive draft, a barometric control must be installed to control excessive draft. It must be adjusted to the maximum draft of 0.06" W.C. (15 Pa) measured at the output of the furnace.

0046- Appendix D6 (page 35 of 75)

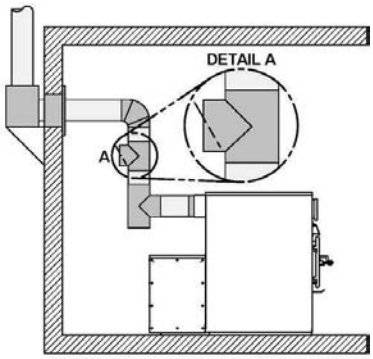

7.4.1 The use of a thermometer

The first use of a thermometer is to inform the user about the discharge temperature of flue gases. Without accurate measurement of the draft using a pressure gauge (manometer), the thermometer will indicate if the temperature is ideal, too low or too high.

The use of e thermometer is therefore an acceptable alternative that can tell if the chimney is hot enough to generate an adequate draft.

- Use a magnetic thermometer for Single wall connector pipe.
- Use a probe thermometer for Double wall connector pipe.

0046- Appendix D6 (page 36 of 75)

Appendix 1: Optional thermostat installation

Using a thermostat will help you maintain a constant temperature throughout the house. A fixed wall mounted 24v thermostat is required.

Note: Thermostat manufacturer's instruction always overrides the information published in the following section.

Thermostat location

- Must be installed on an inside wall of the house.
- Where it will be the least affected by affected by air currents from a hot air outlet or cold outside walls.
- Must be installed at a minimum of 55" (140 cm) above the floor.
- Must be installed at a minimum of 15' (4.57 m) from the furnace and must not receive radiation from the glass door.

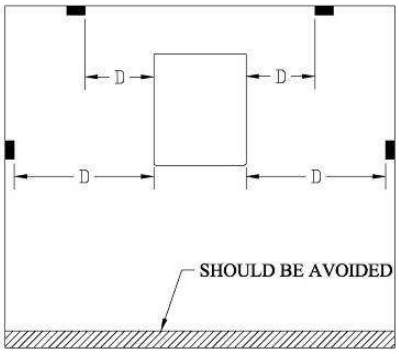

D = MINIMUM DISTANCE 15 FEET

Thermostat wiring

Before installing the thermostat, disconnect the furnace from the outlet.

Use an 18 AWG 2 strand wire.

The terminal is located at the back on the rear right side of the furnace when facing it. It is marked with the letter "T".

Loosen the two screws in the middle of the terminal bloc and insert the wires in the terminals. Tighten the two screws.

Open the thermostat housing and connect the wires following the manufacturer's instructions.

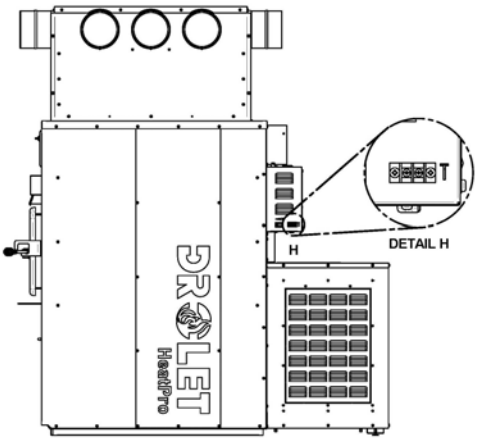

0046- Appendix D6 (page 37 of 75)

Example of thermostat wiring:

Connect one wire to "HR" and the other wire to "W". The red jumper can be left in place. For more information, refer to the manufacturer's instructions.

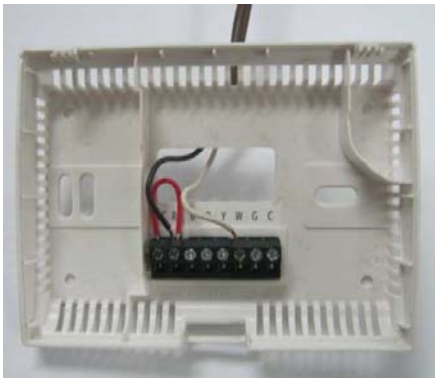

This furnace may be installed in parallel as an add-on to an existing furnace in the USA only. Such an installation requires that the furnace's controls be interlocked to prevent both furnaces from heating at maximum rate simultaneously.

In order to interlock the furnaces, connect the wires from the existing furnace's thermostat, normally R and W, to the terminal identified "INTERLOCK" located next to the thermostat terminal of the HeatPro.

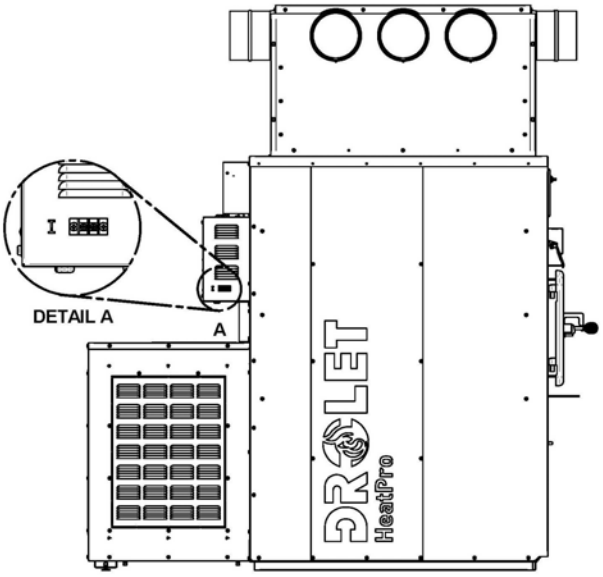

When the wood furnace receives the signal from the existing furnace's thermostat calling for heat, it will disconnect the damper motor, sending the wood furnace in low burn until the call for heat from that thermostat is satisfied.

After the existing furnace's thermostat is satisfied, the wood furnace will return under the control of its own thermostat.

Use in thermostat mode

To ensure the proper operation of the air inlet damper while connected to a thermostat, the manual control switch must be maintained in the closed position. However, when a thermostat is connected to the furnace, it is still possible to use the manual control switch to open the air damper if desired. Even though you chose to control the furnace with a thermostat it is still possible to use the manual control switch to open the air intake damper if desired.

0046- Appendix D6 (page 38 of 75)

Appendix 2: Optional air filters (AC01390, AC01391)

The filter option (AC01390 – cardboard frame or AC01391 – washable aluminum) allows to filter dirt before the distribution of warm air in your installation in addition to protecting your blower. This system can be installed on any side of the blower box located behind the furnace on the most accessible side of your installation. This option includes the filter, the filter holder, two caps and the screws necessary for the installation.

Clean and replace filters as often as required.

Note: The operation cost is higher when using a dirty filter.

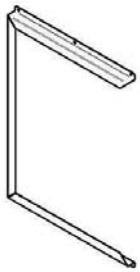

1 filter holder

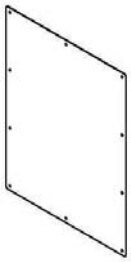

2 caps

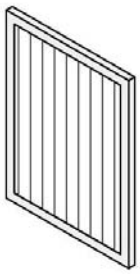

1 filter (15" x 20" x 1")

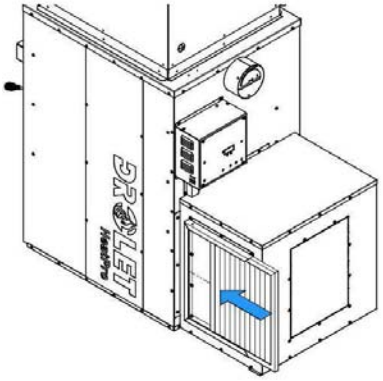

WARNING: IT IS NOT RECOMMENDED OPERATING THE FURNACE WITHOUT FILTERS. THIS APPLIES ESPECIALLY TO TEMPORARY HEATING DURING CONSTRUCTION PERIOD. OPERATING THE FURNACE WITHOUT FILTERS WOULD ALLOW DUST AND OTHER PARTICLES IN THE AIR TO CIRCULATE FREELY AND TO PENETRATE INTO THE BLOWER AND MOTOR CARTERS, CAUSING SOME DEFECTS.

0046- Appendix D6 (page 39 of 75)

Appendix 3: Optional Fresh air return adapter (AC01392)

The optional air return adapter (AC01392) can be added to the furnace blower box to increase the efficiency of your system. This option allows you to take in the fresh air from the rooms connected to the return system and bring it back towards the furnace to be heated. This option can be installed on either one of the 3 sides of the blower box. Complete installation instruction can be found in the instruction booklet provided when purchasing this option.

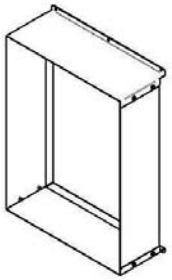

1 fresh air return adapter

2 caps

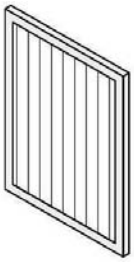

1 filter

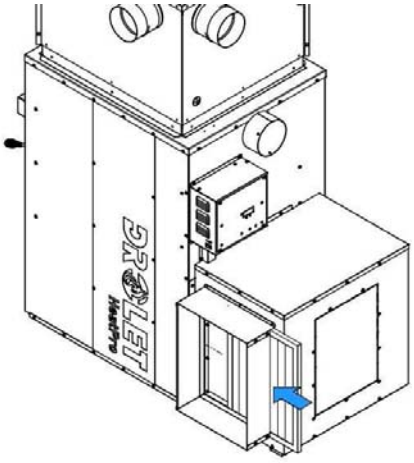

N.B.: TO ENSURE ADEQUATE STATIC PRESSURE, THE SYSTEM SHOULD BE BUILT IN A WAY THAT THE VOLUME OF COLD AIR RETURN IS AT LEAST EQUAL OR SLIGHTLY HIGHER THAN THE VOLUME OF THE HOT AIR DISTRIBUTION.

0046- Appendix D6 (page 40 of 75)

PART 2 – OPERATION, MAINTENANCE AND TROUBLESHOOTING

Please see **Part 1** for installation instructions.

Please see **Part 3** for features and safety instructions.

7.5 How to prepare or buy good firewood

7.5.1 What is good firewood?

Good firewood has been cut to the correct length for the furnace, split to a range of sizes and stacked in the open until its moisture content is reduced to 15 to 20 per cent.

7.5.2 Tree species

The tree species the firewood is produced from is less important than its moisture content. The main difference in firewood from various tree species is the density of the wood. Hardwoods are denser than softwoods. People who live in the coldest regions of North America usually have only spruce, birch and poplar, other low-density species to burn and yet they can heat their homes successfully.

Homeowners with access to both hardwood and softwood fuel sometimes use both types for different purposes. For example, softer woods make good fuel for relatively mild weather in spring and fall because they light quickly and produce less heat Softwoods are not as dense as hardwoods so a given volume of wood contains less energy. Using softwoods avoids overheating the house, which can be a common problem with wood heating in moderate weather. Harder woods are best for colder winter weather when more heat and longer burn cycles are desirable.

Note that hardwood trees like oak, maple, ash and beech are slower growing and longer lived than softer woods like poplar and birch. That makes hardwood trees more valuable. The advice that only hardwoods are good to burn is outdated. Old, leaky cast iron furnaces wouldn't hold a fire overnight unless they were fed large pieces of hardwood. That is no longer true. You can successfully heat your home by using the less desirable tree species and give the forest a break at the same time.

7.5.3 Log length

Logs should be cut about 1″ (25 mm) shorter than the firebox so they fit in easily. Pieces that are too long makes loading the furnace very difficult. The most common standard length of firewood is 16″ (406 mm).

The pieces should be a consistent length, with a maximum of 1″ (25 mm) variation from piece to piece.

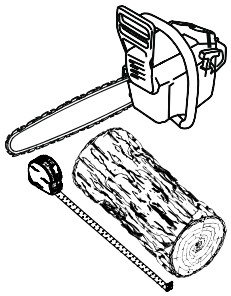

0046- Appendix D6 (page 41 of 75)

7.5.4 Piece size

Firewood dries more quickly when it is split. Large unsplit rounds can take years to dry enough to burn. Even when dried, unsplit logs are difficult to ignite because they don't have the sharp edges where the flames first catch. Logs as small as 3″ (76 mm) should be split to encourage drying.

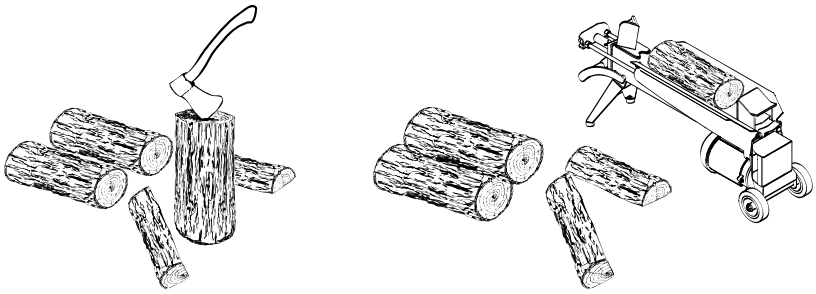

Wood should be split to a range of sizes, from about 3″ to 6″ (76 mm to 152 mm) in cross section. Having a range of sizes makes starting and rekindling fires much easier. Often, the firewood purchased from commercial suppliers is not split finely enough for convenient stoking. It is sometimes advisable to resplit the wood before stacking to dry.

7.5.5 How to dry firewood

Firewood that is not dry enough to burn is the cause of most complaints about wood inserts. Continually burning green or unseasoned wood produces more creosote and involves lack of heat and a dirty glass door. See **Section 9: *Maintaining your wood heating system*** for concerns about creosote.

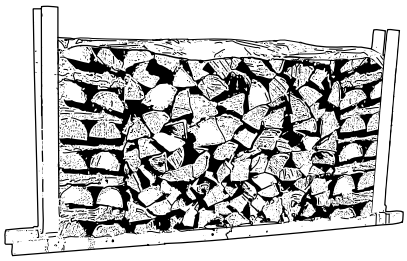

Here are some things to consider in estimating drying time:

- firewood takes a long time to dry
- firewood bought from a dealer is rarely dry enough to burn, so it is advisable to buy the wood in spring and dry it yourself
- drying happens faster in dry weather than in damp, maritime climates
- drying happens faster in warm summer weather than in winter weather
- small pieces dry more quickly than large pieces
- split pieces dry more quickly than unsplit rounds

0046- Appendix D6 (page 42 of 75)

- softwoods take less time to dry than hardwood
- softwoods like pine, spruce, and poplar/aspen can be dry enough to burn after being stacked in the open for only the summer months
- hardwoods like oak, maple and ash can take one, or even two years to dry fully, especially if the pieces are big
- firewood dries more quickly when stacked in the open where it is exposed to sun and wind; it takes much longer to dry when stacked in a wood shed
- firewood that is ready to burn has a moisture content between 15 and 20% by weight and will allow your furnace to produce its highest possible efficiency

7.5.6 Judging firewood moisture content

You can find out if some firewood is dry enough to burn by using these guidelines:

- cracks form at the ends of logs as they dry
- as it dries in the sun, the wood turns from white or cream coloured to grey or yellow,
- bang two pieces of wood together; seasoned wood sounds hollow and wet wood sounds dull,
- dry wood is much lighter in weight than wet wood,
- split a piece, and if the fresh face feels warm and dry it is dry enough to burn; if it feels damp, it is too wet,
- burn a piece; wet wood hisses and sizzles in the fire and dry wood does not.

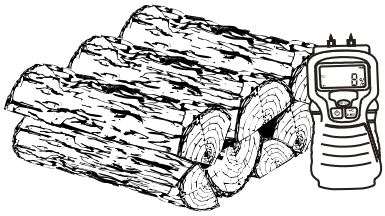

You could buy a wood moisture meter to test your firewood.

8 Operating your furnace

8.1 Your first fires

Two things will happen as you burn your first few fires; the paint cures and the internal components of the furnace are conditioned.

As the paint cures, some of the chemicals vaporize. The vapours are not poisonous, but they do smell bad. Fresh paint fumes can also cause false alarms in smoke detectors. So, when you first light your furnace, be prepared by opening doors and/or windows to ventilate the house. As you burn hotter and hotter fires, more of the painted surfaces reach the curing temperature of the paint. The smell of curing paint does not disappear until you have burned one or two very hot fires.

It is recommended to burn it at high rate and ventilate the building until the odours disappear. Once the paint smell disappears, your furnace is ready for serious heating.

0046- Appendix D6 (page 43 of 75)

8.2 Lighting fires

Each person who heats with wood develops their own favourite method to light fires. Whatever method you choose, your goal should be to get a hot fire burning quickly. A fire that starts fast produces less smoke and deposits less creosote in the chimney. Here are three popular and effective ways to start wood fires.

8.2.1 Conventional fire starting

The conventional way to build a wood fire is to bunch up 5 to 10 sheets of plain newspaper and place them in the firebox. Next, place 10 or so pieces of fine kindling on the newspaper. This kindling should be very thin; less than 1″ (25 mm). Next, place some larger kindling pieces on the fine kindling. Open the air control and light the newspaper. If you have a tall, straight venting system you should be able to close the door immediately and the fire will ignite. If your venting system has elbows or an outside chimney, you may need to leave the door closed but unlatched for a few minutes as the newspaper ignites and heat in the chimney produces some draft. Once the fire has ignited, close the door and leave the air control open.

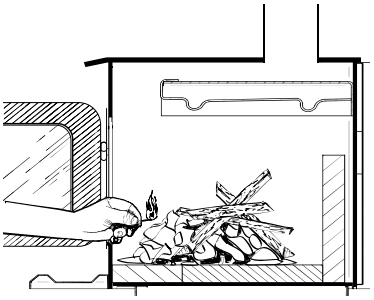

A conventional kindling fire with paper under finely split wood.

DO NOT LEAVE THE FURNACE UNATTENDED WHEN THE DOOR IS SLIGHTLY OPEN DURING IGNITION. ALWAYS CLOSE THE DOOR AFTER IGNITION.

After the kindling fire has mostly burned, you can add firewood pieces until you have a fire of the right size for the conditions.

8.2.2 The top down fire

The top down fire starting method solves two problems with the conventional method: first, it does not collapse and smother itself as it burns; and second, it is not necessary to build up the fire gradually because the firebox is loaded before the fire is lit. A top down fire can provide up to two hours of heating or more. The top down method only works properly if the wood is well-seasoned.

Start by placing three or four full-sized split pieces of dry firewood in the firebox. Next, place 4 or 5 more finely split pieces of firewood (2″ to 3″ (51 mm to 76 mm) diameter) on the base logs at right angles (log cabin style). Now place about 10 pieces of finely split kindling on the second layer at right angles.

The fire is topped with about 5 sheets of newspaper. You can just bunch them up and stuff them in between the kindling and the underside of the baffle. Or you can make newspaper knots by rolling up single sheets corner to corner and tying a knot in them. The advantage of knots is that they don’t roll off the fire as they burn. Light the newspaper and watch as the fire burns from top to bottom.

0046- Appendix D6 (page 44 of 75)

8.2.3 Two parallel logs

Place two spit logs in the firebox. Place a few sheets of twisted newspaper between the logs. Now place some fine kindling across the two logs and some larger kindling across those, log cabin style. Light the newspaper.

8.2.4 Using fire starters

Many people like to use commercial fire starters instead of newspaper. Some of these starters are made of sawdust and wax and others are specialized flammable solid chemicals. Follow the package directions for use.

Gel starter may be used but only if there are no hot embers present. Use only in a cold firebox to start a fire.

8.3 Maintaining wood fires

8.3.1 General advice

Wood heating is very different than other forms of heating.

Do not expect steady heat output from your furnace. It is normal for its temperature to rise after a new load of wood is ignited and for its temperature to gradually decline as the fire progresses. This rising and falling of temperature can be matched to your household routines. For example, the area temperature can be cooler when you are active, such as when doing housework or cooking, and it can be warmer when you are inactive, such as when reading or watching television.

Wood burns best in cycles. A cycle starts when a new load of wood is ignited by hot coals and ends when that load has been consumed down to a bed of charcoal about the same size as it was when the wood was loaded. Do not attempt to produce a steady heat output by placing a single log on the fire at regular intervals. Always place at least three, and preferably more, pieces on the fire at a time so that the heat radiated from one piece helps to ignite the pieces next to it. Each load of wood should provide several hours of heating. The size of each load can be matched to the amount of heat needed.

When you burn in cycles, you rarely need to open the furnace's loading door while the wood is burning. This is an advantage because there is more chance that smoke will leak from the furnace when the door is opened as a full fire is burning. This is especially true if the chimney connector has 90 degree elbows and if the chimney runs up the outside wall of the house.

IF YOU MUST OPEN THE DOOR WHILE THE FUEL IS FLAMING, OPEN THE AIR CONTROL FULLY FOR A FEW MINUTES, THEN UNLATCH AND OPEN THE DOOR SLOWLY.

IMPORTANT

WHEN RELOADING, MAKE SURE YOU KEEP THE AIR INLETS LOCATED AT THE BOTTOM OF THE DOOR INSIDE THE COMBUSTION CHAMBER FREE OF ASH.

OPENING PROCEDURE FOR THE LOADING DOOR

TO MINIMISE THE RISK OF SMOKE SPILLAGE, CRACK THE DOOR OPEN ABOUT AN INCH (25 MM) AND WAIT ABOUT 10 SECONDS BEFORE OPENING IT WIDE TO ALLOW STABILISATION OF THE PRESSURE INSIDE THE FURNACE.

0046- Appendix D6 (page 45 of 75)

8.3.2 Raking charcoal

Rekindle the fire when you notice that the room temperature has fallen. Do not operate your furnace at too low a setting. Keep the air inlet opened long enough during the fire start-up to prevent the fire from smouldering, which could stain the glass. You will find most of the remaining charcoal at the back of the firebox, furthest from the door. Rake these coals towards the door before loading. There are two reasons for this raking of the coals. First, it concentrates them near where most of the combustion air enters the firebox and where they can ignite the new load quickly, and second, the charcoal will not be smothered by the new load of wood. If you were to simply spread the charcoal out, the new load will smoulder for a long time before igniting.

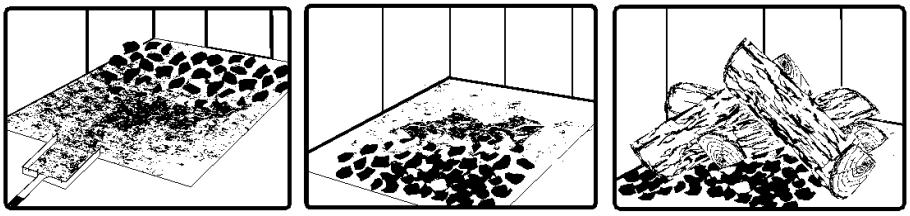

Remove ash first, and then rake charcoal towards the front of the firebox before loading so that it will ignite the new load.

8.3.3 Firing each new hot load

Place the new load of wood on and behind the charcoal, and not too close to the glass. Close the door and open the air control fully. Leave the air control fully open until the firebox is full of flames, the wood has charred to black and its edges are glowing red. Firing each load of wood hot accomplishes a few things:

- drives the surface moisture from the wood,
- creates a layer of char on the wood, which slows down its release of smoke,
- heats the firebox components so they reflect heat back to the fire, and
- heat the chimney so it can produce strong, steady draft for the rest of the cycle.

DO NOT LEAVE THE FURNACE UNATTENDED WHILE A NEW LOAD IS BEING FIRED HOT.

DO NOT OVERFIRE.

When you burn a new load of wood hot to heat up the wood, the furnace and the chimney, the result will be a surge of heat from the furnace. This heat surge is welcome when the room temperature is a little lower than desirable, but not welcome if the space is already warm. Therefore, allow each load of wood to burn down so that the space begins to cool off a little before loading.

0046- Appendix D6 (page 46 of 75)

8.3.4 Control of the air supply

Once the firewood, firebox and chimney are hot, you can close the air supply for a steady burn.

If the flames get very small and almost disappear when you close the air, you have closed the air too early, or your firewood is wetter than it should be. With good fuel and correct air control use, the flames should slow down, but should stay large and steady, even as the air supply is closed.

When the furnace is using a thermostat, it is the thermostat that controls the air inlet damper. When the thermostat calls for heat, the damper opens and the combustion is stirred up. When the furnace gets hot enough, the blower motor is activated.

The following figure shows the position of the air inlet damper **(A)** according to the position of the air inlet damper switch **(B)**.

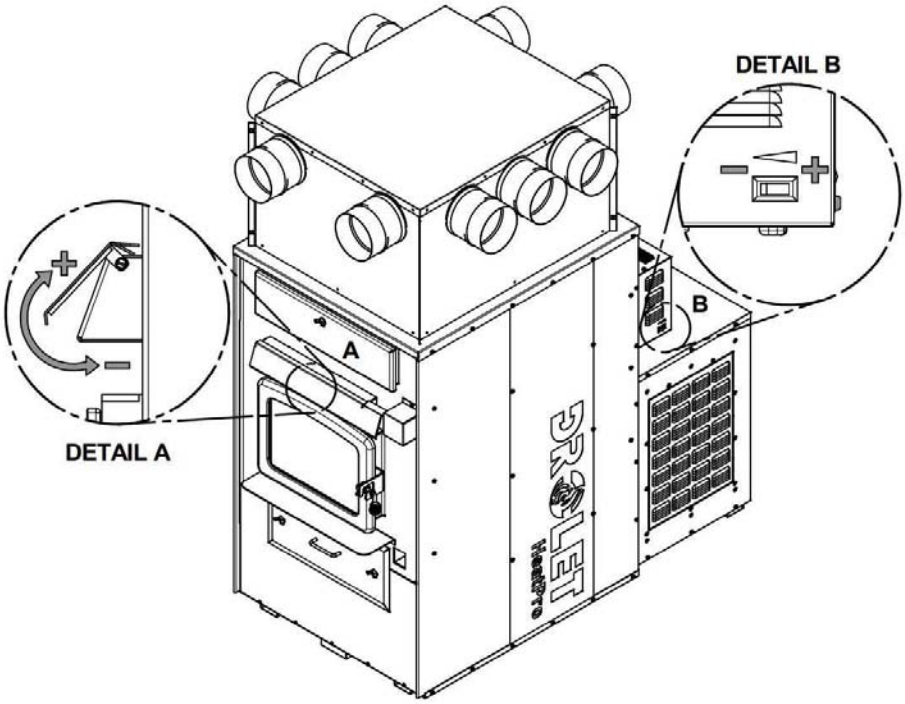

0046- Appendix D6 (page 47 of 75)

8.3.5 Building different fires for different needs

Using the air control is not the only way to match the furnace's heat output to the heat demand. Your house will need far less heat in October than in January to be kept at a comfortable temperature. If you fill the firebox full in fall weather, you will either overheat the space or turn the furnace down so much that the fire will be smoky and inefficient. Here are some suggestions for building fires to match different heat demand.

8.3.5.1 Small fires to take the chill off the house

To build a small fire that will produce a low heat output, use small pieces of firewood and load them crisscross in the firebox. The pieces should be only 3" (76 mm) to 4" (102 mm) in diameter. After raking the coals, you can lay two pieces parallel to each other corner to corner in the firebox and lay two more across them in the other direction. Open the air control fully and only reduce the air after the wood is fully flaming. This kind of fire is good for mild weather when you are around to tend the furnace and should provide enough heat for four hours or more. Small fires like this are a good time to use softer wood species so there will be less chance of overheating the house.

8.3.5.2 Long lasting low output fires

Sometimes you will want to build a fire to last up to eight hours, but don't need intense heat. In this case use soft wood species and place the logs compactly in the firebox so the pieces are packed tightly together. You will need to fire the load hot for long enough to fully char the log surfaces before you can turn the air down. Make sure the fire is flaming brightly before leaving the fire to burn.

8.3.5.3 High output fires for cold weather

When the heat demand is high during cold weather, you'll need a fire that burns steadily and brightly. This is the time to use your biggest pieces of hardwood fuel if you have it. Put the biggest pieces at the back of the firebox and place the rest of the pieces compactly. A densely built fire like this will produce the longest burn your furnace is capable of.

You will need to be cautious when building fires like this because if the air is turned down too much, the fire could smoulder. Make sure the wood is flaming brightly before leaving the fire to burn.

0046- Appendix D6 (page 48 of 75)

8.3.5.4 Maximum burn cycle times

The burn cycle time is the period between loading wood on a coal bed and the consumption of that wood back to a coal bed of the same size. The flaming phase of the fire lasts for roughly the first half of the burn cycle and the second half is the coal-bed phase during which there is little or no flame. The length of burn you can expect from your furnace, including both the flaming and coal bed phases, will be affected by a number of things, such as:

- firebox size,
- the amount of wood loaded,
- the species of wood you burn,
- the wood moisture content,
- the size of the space to be heated,
- the climate zone you live in, and
- the time of year.
- the time cycle for the thermostat to call for heat.

The table below provides a very general indication of the maximum burn cycle times you are likely to experience, based on firebox volume.

FIREBOX VOLUME	MAXIMUM BURN TIME
<1.5 cubic feet	3 to 5 hours
1.5 c.f. to 2.0 c.f.	5 to 6 hours
2.0 c.f. to 2.5 c.f.	6 to 8 hours
2.5 c.f. to 3.0 c.f.	8 to 9 hours
>3.0 c.f.	9 to 10 hours

8.3.6 Control of the air inlet damper

Always turn the furnace on with the air inlet damper open. Once the temperature of the wood, the combustion chamber and the chimney is stable, close the air inlet damper to obtain a more efficient combustion.

To control the air inlet damper, use the switch on the side of the control box located at the back of the furnace.

Reducing the combustion air will do two things. First, the combustion rate will decrease, which will spread the thermal energy of the fuel over a longer period of time. In addition, the velocity of the exhaust gas decreases, which allows better heat transfer in the heat exchanger and chimney.

The closure of the main air intake reduces the intensity of the flames which indicates the achievement of optimum performance. If the flames diminish in intensity at a point where it almost disappears, it is an indication that the air inlet damper was closed too soon or the firewood used is dry enough. If the wood is dry enough and the air control is closed when the unit is at a stable temperature, the flames will decrease but remain strong and stable to provide efficient heating.

0046- Appendix D6 (page 49 of 75)

8.4 Additional fresh air supply

When the furnace and the chimney are completely cold, it may be necessary to provide fresh air by opening a door or a window for a few minutes while lighting the fire.

Take note that a house constructed or renovated in order to be airtight may lack the volume of fresh air necessary for the proper combustion of a solid-fuel heating appliance.

In such a case, when starting up the fire, do not operate appliances that evacuate air outside the house, such as:

- Range hood
- Air exchanger
- Clothes dryer
- Bathroom blower
- Ventilated central vacuum system

Exhaust blowers that are in a fuel storage room should be installed so as not to create negative pressure in the room where the solid fuel appliance is located.

A fresh air supply may be necessary to prevent solid fuel units from rejecting products of combustion into the house. The indications used to determine if an additional fresh air supply is necessary are not appropriate for all the situations. When in doubt, it is recommended installing a fresh air supply.

A fresh air supply may be needed if:

- Solid fuel units present anomalies, such as irregular draft, smoke return, bad combustion, and/or reversed draft (whether there is combustion or not);
- Existing solid fuel units such as a stove or fireplace release odours, heat badly, cause smoke returns, or reversed draft (whether there is combustion or not);
- The opening of a window, even slightly, in calm weather (windless), eliminates every problem mentioned above ;
- The house is equipped with a tight vapour barrier and adjusted windows, and/or is equipped with an interior air mechanical evacuation device ;
- There is excessive condensation on the windows in winter; and
- The house is equipped with a ventilation system.

If, according to these symptoms or other similar ones, there is insufficient combustion air, it is necessary to ensure an additional combustion air supply (see **Section 6: *Combustion Air***).

0046- Appendix D6 (page 50 of 75)

8.5 Manual or thermostat control

From the factory, the opening and closing of the air inlet damper is manually activated by the means of a switch located at the rear of the furnace. The switch has two positions; opened and closed.

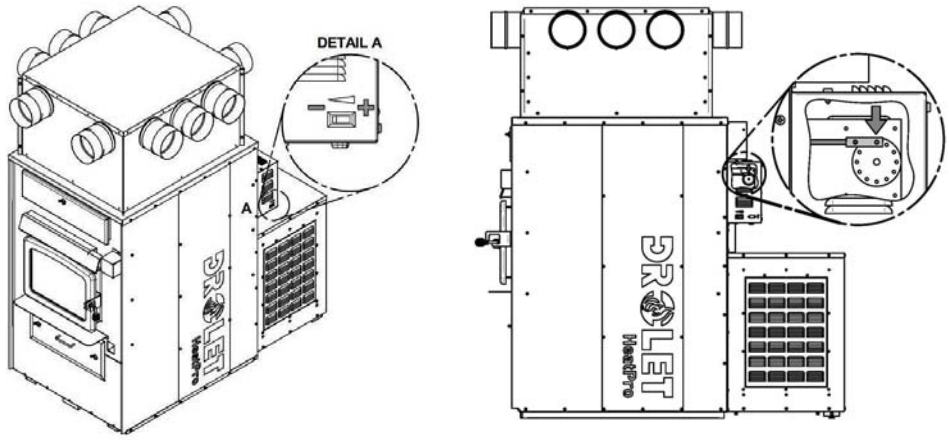

Position of the air control rod when the switch in the "closed" position.

For added comfort, the installation of an optional wall thermostat is recommended since it will open the air inlet damper when the room temperature is below the set point of the thermostat and will close the air inlet damper as the desired temperature is reached (see **Appendix 1: *Optional Thermostat Installation***).

If the heat sensors detect any overheating in the air jacket of the furnace, the air inlet damper will close automatically regardless of the type of control used.

8.6 Ash drawer

Your furnace is equipped with an ash drawer to collect ashes produced by the combustion of wood. The ash drawer is provided with two (2) wing nuts to hold the door in a close position. Operating the furnace with the ash drawer open may seriously damage the furnace. **The drawer must be emptied regularly.**

8.7 Prolonged power outage

To reduce the risk of overheating during a prolonged power outage (more than 10 minutes), it is recommended damper is closed. If your furnace is equipped with the optional filter, remove the air filter to improve the circulation of air around the combustion chamber of the furnace. Do not load the furnace more than 50 percent of its capacity to prevent the risk of overheating,

0046- Appendix D6 (page 51 of 75)

9 Maintaining your wood heating system

9.1 Furnace maintenance

Your new furnace will give many years of reliable service if you use and maintain it correctly. Some of the internal components of the firebox, such as firebricks, baffles and air tubes, will wear over time under intense heat. You should always replace defective parts with original parts (see **Section 11: Exploded diagram and parts list**). For firing each load hot to begin a cycle as described above will not cause premature deterioration of the furnace. However, letting the furnace run with the air control fully open for entire cycles can cause damage over time. The hotter you run the furnace throughout burn cycles, the more quickly its components will deteriorate. For that reason, **never leave the furnace unattended while a new load is being fired hot**.

9.1.1 Ash removal

Ash should be removed from the firebox every two or three days of full-time heating. Do not let the ash build up in the firebox because it will interfere with proper fire management.

The best time to remove ash is after an overnight fire when the furnace is relatively cool, but there is still some chimney draft to draw the ash dust into the furnace and prevent it from coming into the room.

After ashes have been removed from the furnace and placed in a tightly covered metal container, they should be taken outside immediately. The closed container of ashes should be placed on a non-combustible floor or on the ground well away from all combustible materials pending final disposal. Ashes normally contain some live charcoal that can stay hot for several days. If the ashes are disposed of by burial in soil or otherwise locally dispersed, they should be retained in the closed container until all cinders have thoroughly cooled. Other wastes shall not be placed in this container.

NEVER STORE ASHES INDOORS OR IN A NON-METALIC CONTAINER OR ON A WOODEN DECK. ALWAYS LEAVE THE CONTAINER ON A NON-COMBUSTIBLE FLOOR.

9.1.2 Cleaning door glass

Under normal conditions, your door glass should stay relatively clear. If your firewood is dry enough and you follow the operating instructions in this manual, a whitish, dusty deposit will form on the inside of the glass after a week or so of use. This is normal and can be easily removed when the furnace is cool by wiping with a damp cloth or paper towel and then drying. **Never try to clean the glass when the furnace is hot.**

In spring and fall the furnace will cycle less often. You may see some light brown stains forming, especially at the lower corners of the glass. This indicates that the combustion has been incomplete and some of the smoke has condensed on the glass. When the weather is mild, you may find that letting the fire go out is better than trying to maintain a continuous fire. Use the technique described above for building a fire to take the chill off the house.

0046- Appendix D6 (page 52 of 75)

If you do get brown stains on the glass, you can remove them with special cleaners for wood furnace glass doors. **Do not use abrasives to clean your furnace's door glass.**

The deposits that form on the glass are the best indication of the quality of your fuel and how well you are doing in operating the furnace. Your goal should be clear glass with no brown stains. If you continue to see brown stains on the glass, something about your fuel and operating procedure needs to be changed. Stains on the glass indicate incomplete combustion of the wood, which also means more smoke emissions and faster formation of creosote in the chimney.

If you see brown streaks coming from the edge of the glass, it is time to replace the gasket around the glass. Visit your furnace retailer to get the self-adhesive glass gasket and follow the **Section 9.1.4: *Replacement of the glass and gaskets*** instructions for installation.

- Check the glass regularly to detect any crack or damage. Replace damaged glass immediately; do not use the furnace with a broken glass.

9.1.3 Door adjustment

In order for your furnace to burn at its best efficiency, the door must provide a perfect seal with the firebox. Therefore, the gasket should be inspected periodically making sure to obtain an air-tight fit. Air tightness can be improved with a simple latch mechanism adjustment. If the adjustment is not sufficient, replace the door gasket with a new one (see **Section 9.1.4: *Replacement of the glass and gaskets***).

Door adjustment procedure

1. Unscrew the locking pin **(B)** and nut **(A)** from the door (see image below).
2. To increase the pressure of the door on the gasket, turn the handle. Counter-clockwise, to reduce the pressure of the door on the cord, turn the handle clockwise to clockwise.
3. Finally, screw-in the locking pin **(B)** about 1/4" (6 mm) deep and make sure you lock it with the nut **(A)**.

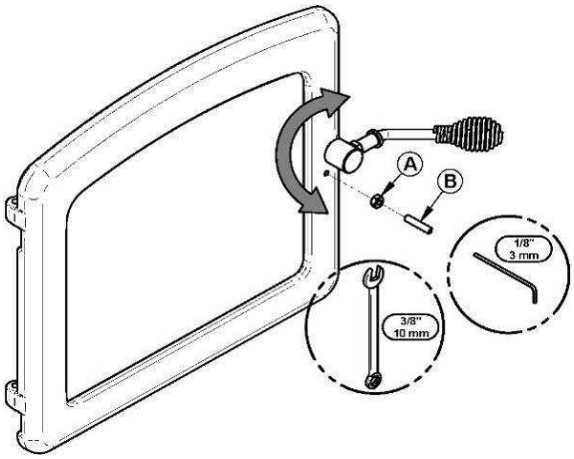

0046- Appendix D6 (page 53 of 75)

9.1.4 Replacement of the glass and gaskets

After a year or more of use, the gasket of the door will compress and become hard which can allow air to pass. You can check the air tightness of your door gasket by closing and locking the door on a piece of paper. Check all around the door. If the paper slides easily anywhere, it is time to replace the gasket.

Use a good quality gasket that you can purchase from your dealer. The correct size and density of the gasket are important to ensure a good seal.

Prior of removing the defective glass, you need to remove the door gasket. Inspect the door gasket before it is reinstalled to make sure it is in good condition. We suggest replacing the door and glass gasket at the same time as their level of wear over time is similar.

For the following steps, wearing gloves and safety glasses are recommended for handling seals can irritate the skin and the glass can be sharp.

- To replace the door gasket, use the steps 1 to 3 and 10 outlined below;
- To replace the glass, use the steps 1 to 6 and 9 to 10 outlined below;
- To replace the glass gasket, use the steps 1 to 10 outlined below;

1. Remove the door **(F)** and place it on a stable work surface, handle down.
2. Using pliers, remove the door gasket **(A)**.
3. Using a scraper or a small flat screwdriver, remove the adhesive left in the gasket grove in the door then clean the surface using a commercial vacuum.
4. Use a Phillips screwdriver or a power drill to remove the screws **(B)** that holds the glass retainer **(C)**.
5. Remove the glass frame **(D)**
6. Remove the glass **(E)** (or pieces of glass if it is damaged) and clean the inside of the door frame.
7. Remove the old glass gasket.
8. Install the new gasket on the glass. Remove a part of the paper covering the gasket adhesive. Center the gasket on the edge of the glass so that when folded and glued, the gasket is equal on both sides. Do not stretch the gasket during installation. Remove a majority of the paper, turn the glass to facilitate and complete the installation of the gasket. When you return to the starting point, cut the gasket so that the ends overlap by about 1/2" (13 mm).

0046- Appendix D6 (page 54 of 75)

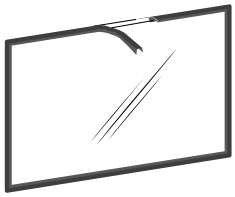

9. Install the glass **(E)** and glass frame **(D)** and centering it in the frame of the door and install the glass retainer frame **(D)** and glass retainers **(C)** taking care not to over tighten the screws **(B)**. Note that the two main causes of glass breakage are unequal position in the door and screws too tight.
10. Install the new door gasket **(A)**. To do this, use about 1/4" (6 mm) of adhesive to the bottom of the groove that holds the gasket in the door. Then lay the new gasket starting from the center of the hinge side and taking care not to stretch the gasket during installation. Leave about 1/2" (13 mm) of gasket exceed the frame of the door. Once jointed, push the fibers protruding towards the inside of the groove in the adhesive. Install the door and let dry for 24 hours before using the furnace.

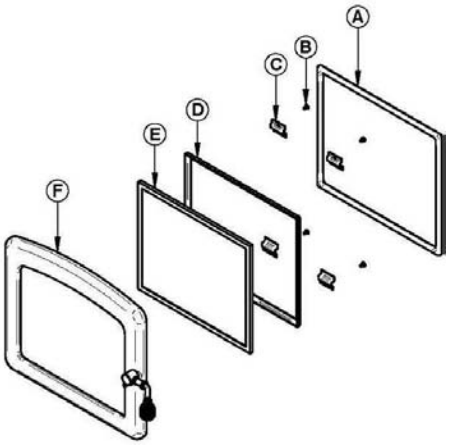

Do not abuse the glass door by striking or slamming shut. Do not use the furnace if the glass is broken. To change the glass, perform the same operation described above.

9.1.5 Cleaning and painting the furnace

Do not attempt to clean or paint the furnace when the unit is hot. Painted surfaces can be wiped down with a damp cloth. Plated or enameled surfaces may be scratched by abrasive cleaners. To maintain the finish at its original brilliance, use only a damp soft cloth to clean plated or enameled surfaces.

If the paint becomes scratched or damaged, you can give your wood furnace a brand new look by repainting it with heat-resistant or enamel finish paint. Before painting, roughen the surface with fine sand paper, wipe it down to remove dust, and apply two thin coats of paint. For best results, use the same paint that was originally used on the furnace, which is available in spray cans. See your dealer for details.

0046- Appendix D6 (page 55 of 75)

9.1.6 Heat exchangers care

Heat exchangers must be cleaned thoroughly at the end of every heating season. During summer, the air in basements is damper and with minimal air circulation within the furnace, it can mix with creosote and/or sooth deposits in the exchangers to form an acid that could accelerate the corrosion process and induce premature decay of the steel. Corrosion damages are not covered under warranty.

The smoke pipe and exchangers must be inspected regularly during the heating season. Access to the exchangers is easy and does not require tools;

1. Unscrew the wing nut **(B)** and remove the washer **(C)** on the exchanger access door (see **Detail B**).

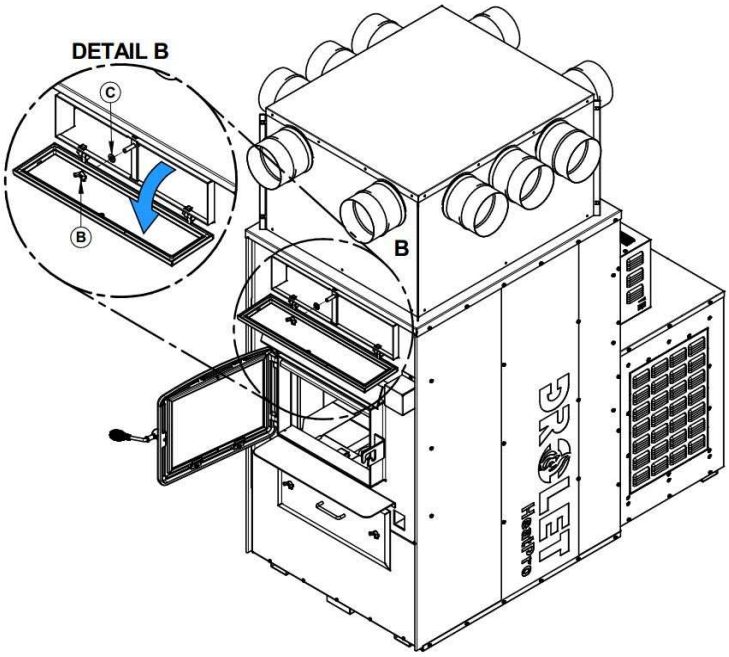

0046- Appendix D6 (page 56 of 75)

2. Move the baffle of the combustion chamber forward (see **Detail A**).

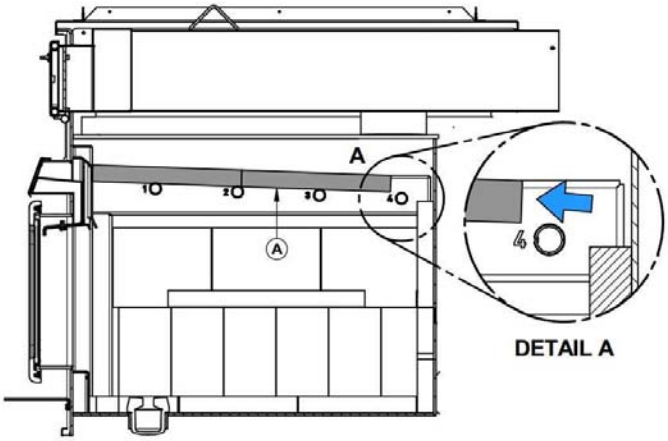

3. Use the tool provided, clean the three exchanger pipes (see **Detail C**).

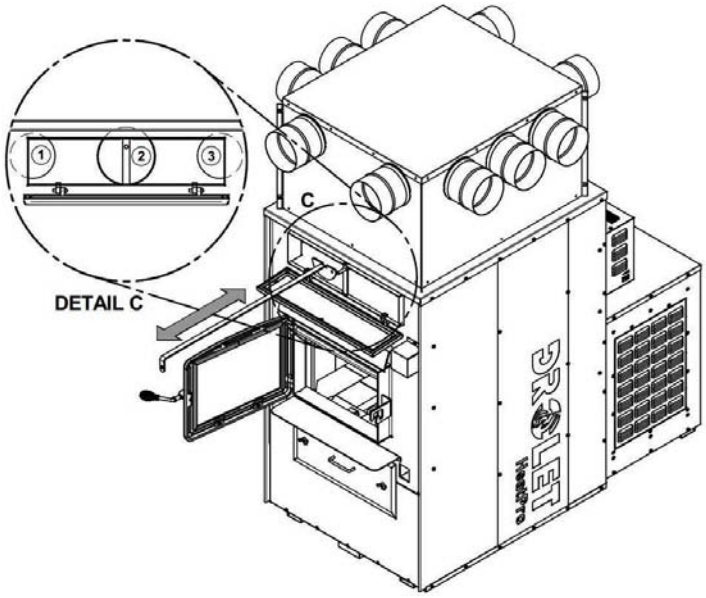

0046- Appendix D6 (page 57 of 75)

4. Dirt in the lateral exchangers (1 and 3) falls into the combustion chamber at the rear.

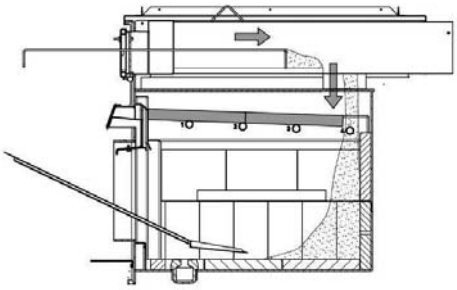

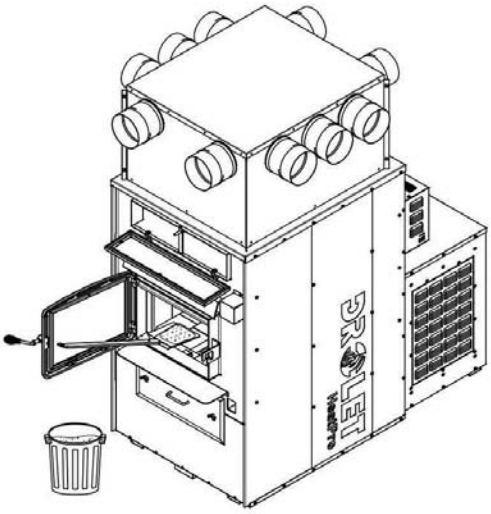

5. Dirt in the central exchanger (2) will be removed from the front or the rear of the furnace. If you remove dirt from the central exchange to the back of the furnace, remove the black pipe connector in order to dispose of the dirt.

6. Then, check that the baffle is clear of ash and reposition it in its original position towards the back of the combustion chamber.

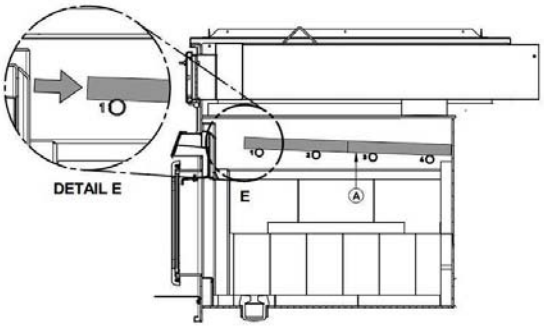

0046- Appendix D6 (page 58 of 75)

7. Close the exchanger access door and secure it using the washer **(C)** and wing nut **(B)** (see **Detail D**).

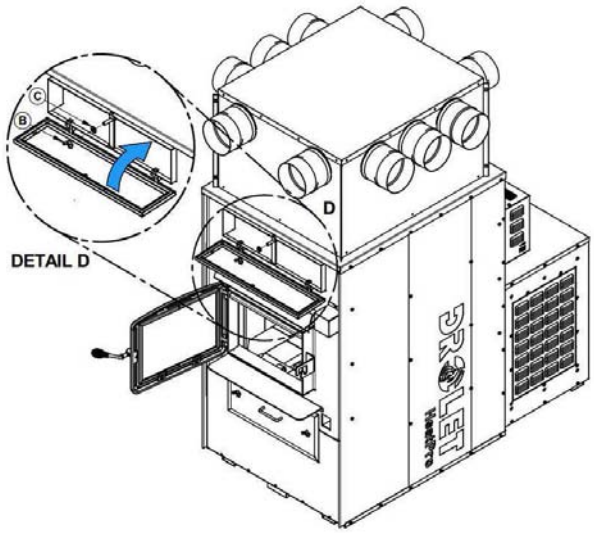

8. If you have performed maintenance from the back part of the furnace, reinstall the black pipe connector and secure it with three screws.

9.2 Chimney and chimney connector maintenance

9.2.1 Why chimney cleaning is necessary

Wood smoke can condense inside the chimney connector and chimney, forming a combustible deposit called creosote. If creosote is allowed to build up in the venting system, it can ignite when a hot fire is burned in the furnace and a very hot fire can progress to the top of the chimney. Severe chimney fires can damage even the best chimneys. Smouldering, smoky fires can quickly cause a thick layer of creosote to form. When you avoid smouldering so the exhaust from the chimney is mostly clear, creosote builds up more slowly. Your new furnace has the right characteristics to help you to burn clean fires with little or no smoke, resulting in less creosote in the chimney.

9.2.2 How often should you clean the chimney?

It is not possible to predict how much or how quickly creosote will form in your chimney. It is important, therefore, to check the build-up in your chimney monthly when getting used to the new furnace until you determine the rate of creosote formation. Even if creosote forms slowly in your system, the chimney should be cleaned and inspected at least once each year.

Contact your local municipal or provincial fire authority for information on how to handle a chimney fire. Have a clearly understood plan to handle a chimney fire.

0046- Appendix D6 (page 59 of 75)

CAUTION: IT IS RECOMMENDED CLEANING THE HEAT EXCHANGERS, FLUE PIPE AND CHIMNEY THOROUGHLY AT THE END OF THE HEATING SEASON IN ORDER TO PREVENT CORROSION DURING THE SUMMER MONTHS, CAUSED BY ACCUMULATED ASH.

9.2.3 Cleaning the chimney

Chimney cleaning can be a difficult and dangerous job. If you don't have experience cleaning chimneys, you might want to hire a professional chimney sweep to clean and inspect the system for the first time. After having seen the cleaning process, you can decide if it is a job you would like to take on.

The most common equipment used are fibreglass rods with threaded fittings and stiff plastic brushes. The brush is forced up and down inside the chimney flue to scrub off the creosote.

The chimney connector assembly should always be cleaned at the same time the chimney is cleaned.

CAUTION: *Operation of your furnace without the baffle may cause unsafe and hazardous temperature conditions and will void the warranty*. **NOTE:** Before installing the firebrick, check to ensure that none are broken or damaged in any way. If so, have the damaged ones replaced. Check the firebrick for damage at least annually and replace any broken or damaged ones with new ones. Inspection and cleaning of the chimney is facilitated by the removable baffle.

9.3 Smoke pipe inspection

- The smoke pipe must be inspected regularly during the heating season.
- The pipe must be examined carefully to detect any defect or damage.
- The pipe can be reassembled if no defect is detected and the defective pipe must be replaced immediately.
- INSPECT FLUE PIPES, FLUE PIPE JOINTS, AND FLUE PIPE SEALS REGULARLY TO ENSURE THAT SMOKE AND FLUE GASES ARE NOT DRAWN INTO, AND CIRCULATED BY, THE AIR-CIRCULATION SYSTEM

9.4 Blower motor maintenance

Periodic cleaning of the blower housing and louvers as well as blower and blower blades using a vacuum cleaner is necessary in order not to affect performance and cause overheating of the latter.

0046- Appendix D6 (page 60 of 75)

10 Troubleshooting

PROBLEMS	CAUSES	SOLUTIONS
Heating inefficient during the first combustions. Lack of draft.	Improper adjustment of the barometric damper (open too wide). Chimney flue restriction (too long. 90° elbows).	Adjust the damper, minimize the smoke pipe length and use 45° elbows.
Furnace burns well, warm air plenum is very hot but there is not much heat coming out in the room.	Improper installation of the ducts, low static press0ure, unbalanced system (too many warm air outlets and not enough fresh air return).	Rearrange the ducting to respect the minimum static pressure of 0.20 in. W.C. (50 Pa)
Furnace consumes a lot of wood.	The damper switch always left on. The thermostat which controls the damper is continuously activated or is too close to a source of cold air. Damper not properly adjusted. House not insulated enough. The ash plug and drawer are not tightly closed. Furnace too small for the surface to be heated. Unbalanced ventilation system, very little heat where the thermostat is located.	If manually controlled, install a wall thermostat. Relocate the thermostat. Rebalance the ventilation system in order to increase the air flow in the room where the thermostat is located.
A lot of creosote, moderate heat output.	Wet wood, lack of draft. Barometric damper not properly adjusted. Restriction in the furnace or chimney.	Use dry wood. Adjust the barometric damper. Clean the chimney, flue pipe and the furnace exchangers.
Furnace heats a lot but the warm air duct does not get hot.	Wet wood or low-grade wood. No static pressure. Unbalanced ventilation system.	Use dry wood. Rearrange the ventilation system correctly.
Primary air inlet damper never opens.	Furnace is not plugged-in.or an electrical component is faulty.	Make sure the furnace is plugged-in a functional power outlet. Test and replace if necessary, control switch, thermostat, and damper motor.

0046- Appendix D6 (page 61 of 75)

10.1 Installation of secondary air tubes and baffle

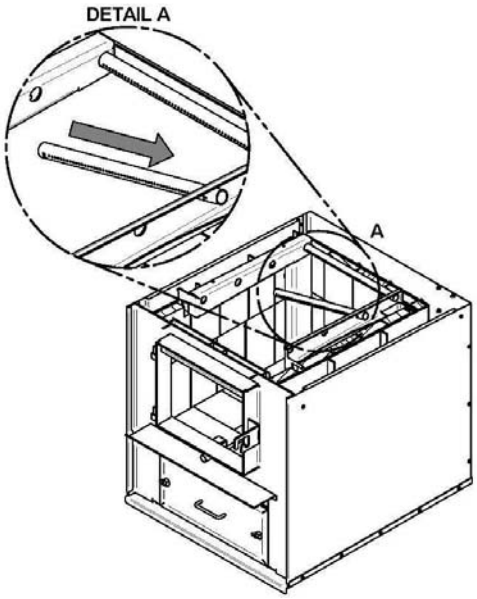

1- Starting with the rear tube, lean and insert the right end of the secondary air tube into the rear right channel hole. Then lift and insert the left end of the tube into the rear left channel.

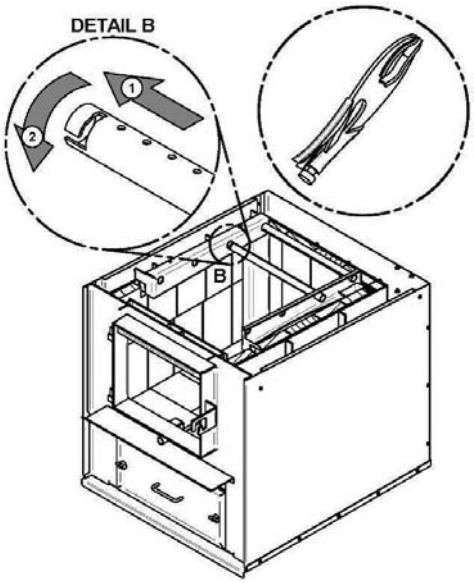

2- Align the notch in the left end of the tube with the key of the left air channel hole. Using a “Wise grip” hold the tube and lock it in place by turning the tube as shown in **Detail B**. Make sure that the notch reaches the end of the key way.

3- Repeat **steps 1** and **2** for the other secondary air tubes.

4- To remove the tubes use the above steps in reverse order.

0046- Appendix D6 (page 62 of 75)

Note that secondary air tubes **(A)** can be replaced without removing the baffle board **(B)**.

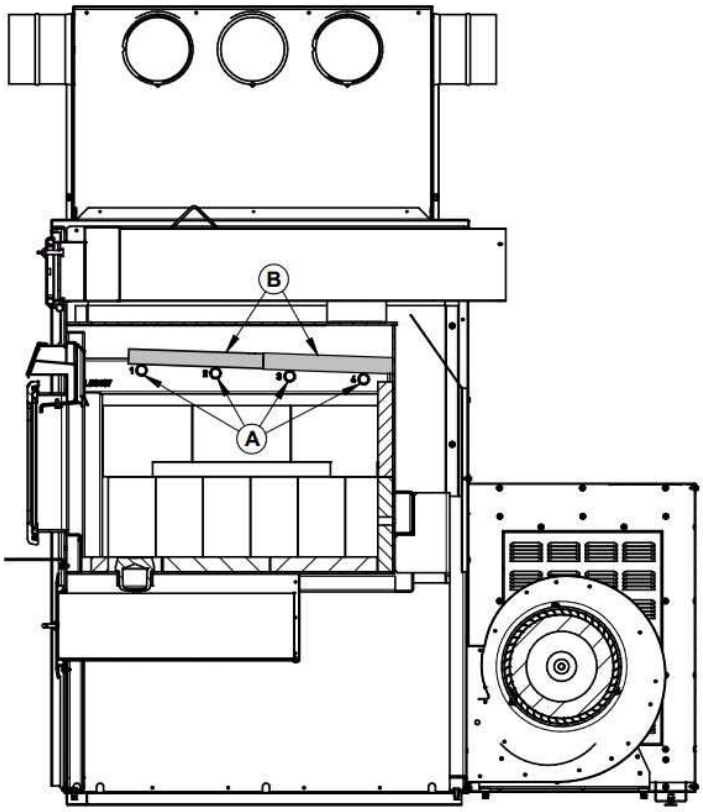

Important Notes:

The air tubes are identified for placement as follows:

Model	Type of tube
HEATPRO	Front ► 77 holes of 0.147” Middle front ► 77 holes of 0.161” Middle rear ► 77 holes of 0.180” Rear ► 77 holes of 0.194”

0046- Appendix D6 (page 63 of 75)

11 Exploded diagram and parts list

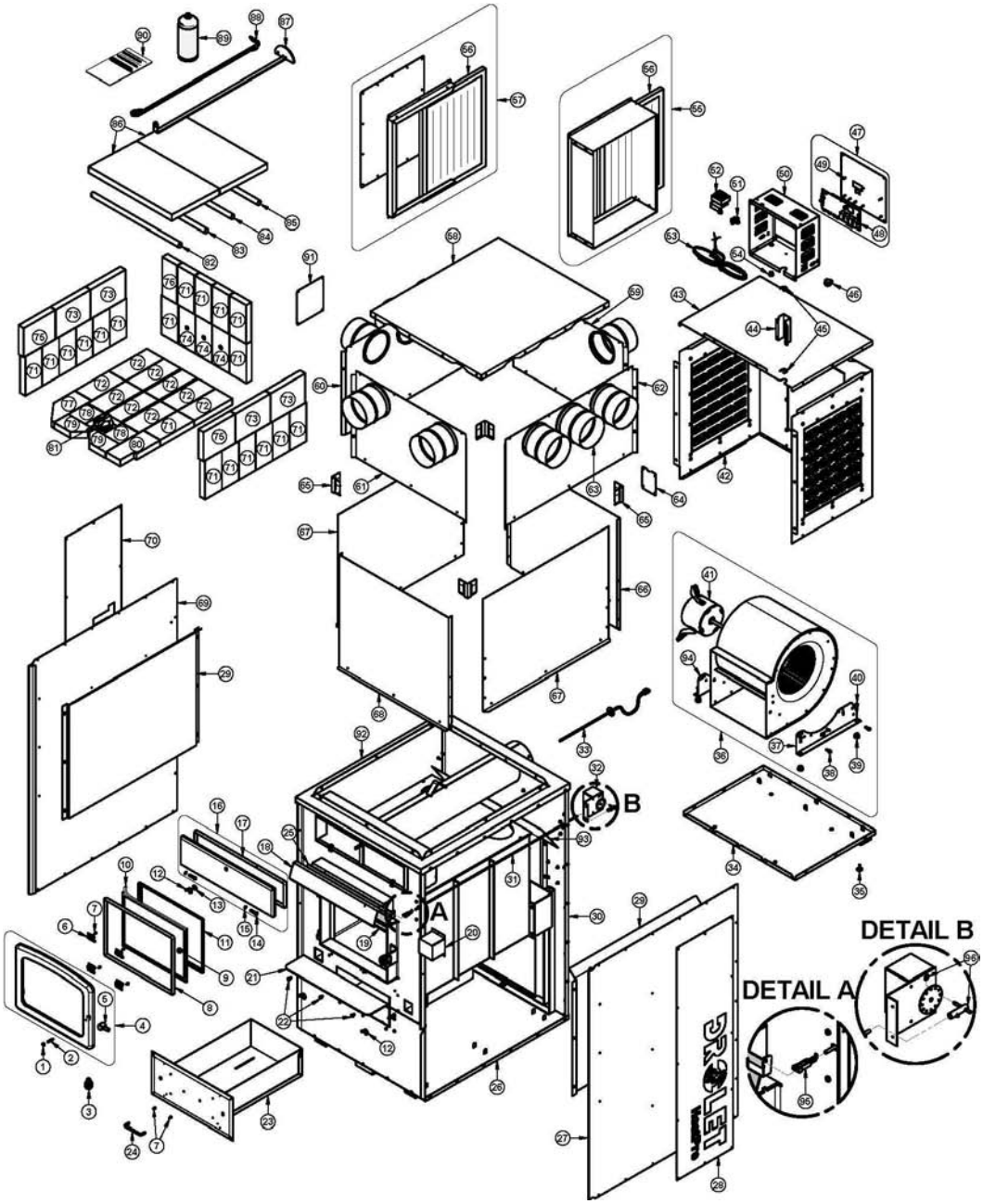

0046- Appendix D6 (page 64 of 75)

IMPORTANT: THIS IS DATED INFORMATION. When requesting service or replacement parts for your furnace, please provide the model and the serial number. We reserve the right to change parts due to technological upgrades or availability. Contact an authorized dealer to obtain any of these parts. Never use substitute materials. Use of non-approved parts can result in poor performance and safety hazards.

#	Item	Description	Qty
1	30100	BLACK HEX NUT 1/4 - 20	1
2	30128	SOCKET SET SCREW 1/4"-20 X 1 1/4"	1
3	30429	3/8" NICKEL COIL HANDLE	1
4	SE24025	CAST IRON DOOR WITH GASKET AND HANDLE	1
5	AC09151	REPLACEMENT HANDLE KIT	1
6	PL51351	GLASS RETAINER FRAME BRACKET	4
7	30124	SCREW #8 - 32 X 5/16" TRUSS QUADREX ZINC	6
8	AC06725	GLUE AND 3/4" X 7' WHITE DOOR GASKET KIT	1
9	SE56287	REPLACEMENT GLASS WITH GASKET 10 7/8" X 15 1/8"	1
10	AC06400	3/4" (FLAT) X 6' BLACK SELF-ADHESIVE GLASS GASKET	1
11	PL56285	GLASS RETAINER	2
12	30416	WING NUT 3/8"-16	3
13	30205	ZINC WASHER ID 13/32" X OD 13/16"	1
14	30168	HINGE PIN 5/16 DIA. X 1 1/4" L	2
15	30055	HINGE PIN RETAINING RING 5/16" ID X 0.512" OD	2
16	SE56800	HEAT EXCHANGER ACCESS DOOR ASSEMBLY	1
17	AC06000	SILICONE AND 1/2" X 8' BLACK DOOR GASKET KIT	1
18	SE56792	PRIMARY AIR DAMPER ASSEMBLY	1
19	PL56356	PRIMARY AIR DEFLECTOR HEAT SHIELD	1
20	PL56793	DAMPER CONTROL GUARD	1
21	PL56780	ASH LIP	1
22	30060	THREAD-CUTTING SCREW 1/4-20 X 1/2" F HEX STEEL SLOT WASHER C102 ZINC	6
23	SE56781	ASH DRAWER	3
24	28061	CHROME ASH DRAWER HANDLE	1
25	21341	AIR CONTROL PLATE INSULATION	1
26	PL56765	AIR JACKET FLOOR	1
27	PL56769	RIGHT AIR JACKET PANEL	1
28	PL56772	RIGHT SIDE DECORATIVE PANEL	1
29	PL56770	INTERNAL DEFLECTOR	2
30	PL56773	REAR AIR JACKET	1
31	30869	PRIMARY AIR CONTROL ROD	1
32	51000	HONEYWELL 24V DAMPER MOTOR	1
33	SE44096	100 OHM RTD PROBE 38" WIRE WITH CONNECTOR	1
34	PL56784	BLOWER BOX BASE	1
35	30536	LEVELING BOLT 1/4 - 20 X 1"	2
36	SE56815	FAN ASSEMBLY WITH 1/3 HP DD MOTOR	1
37	30336	RIGHT HOUSING SUPPORT FOR G10 BLOWER	1

0046- Appendix D6 (page 65 of 75)

#	Item	Description	Qty
38	30094	HEX SCREW WASHER HEAD 1/4-20 X 3/4" F ZINC TYPE	4
39	30335	BLOWER ANTI-VIBRATION CUSHION	4
40	30109	BOLT HEX 1/4 - 20 X 1"	4
41	51003	1/3 HP 4 SPEED MOTOR FOR G-10 DD	1
42	PL56785	BLOWER BOX CONTOUR	1
43	PL56786	BLOWER BOX TOP	1
44	PL66041	WIRE CHANNEL	1
45	30494	PANDUIT POLYETHYLENE EXTRUSION	0.5
46	44091	ROCKER SWITCH 2 POSITION MSR-8	1
47	SE56810	ELECTRONIC FAN & LIMIT WITH COVER	1
48	PL56798	ELECTRONIC FAN & LIMIT BOARD HEATPRO	1
49	30408	ELECTRONIC BOARD CLIP	7
50	PL56809	ELECTRONIC FAN & LIMIT HOUSING	1
51	60036	THERMOSTAT TERMINAL	1
52	60208	TRANSFORMER 120 V/24 V 20 VA	1
53	60013	POWER CORD 96" X 18-3 type SJT	1
54	60008	BLACK NYLON BUSHING	1
55	AC01392	COLD AIR RETURN HOUSING WITH FILTER	1
56	21044	CARDBOARD FRAME AIR FILTER 20" X 15" X 1"	2
57	AC01390	CARDBOARD FRAME AIR FILTER WITH SUPPORT (20" X 15" X 1")	1
58	PL56805	PLENUM TOP PANEL	1
59	PL56804	TOP PLENUM REAR PANEL	1
60	PL56807	TOP PLENUM LEFT PANEL	1
61	PL56806	TOP PLENUM FRONT PANEL	1
62	PL56803	TOP PLENUM RIGHT PANEL	1
63	49090	ADAPTER 6"	10
64	PL56817	TOP PLENUM RTD COVER	1
65	PL56818	BOTTOM PLENUM CORNER REINFORMENT	4
66	PL56801	BOTTOM PLENUM REAR PANEL	1
67	PL56802	BOTTOM PLENUM LEFT OR RIGHT PANEL	2
68	PL56808	BOTTOM PLENUM FRONT PANEL	1
69	PL56768	LEFT DECORATIVE PANEL	1
70	PL56771	LEFT SIDE DECORATIVE PANEL	1
71	29000	4" X 8" X 1 1/4" REFRACTORY BRICK	19
72	29015	4" X 9" X 1 1/4" REFRACTORY BRICK	9
73	29005	6" X 8 1/4" X 1 1/4" REFRACTORY BRICK HD	4
74	21343	4" X 8" X 1 1/4" REFRACTORY BRICK WITH HOLE	3
75	PL36231	6" X 7 1/2" X 1 1/4" REFRACTORY BRICK	2
76	PL36119	3 1/2" X 8" X 1 1/4" REFRACTORY BRICK	1
77	PL36059	CUT BRICK 4" X 8 7/8" X 3 3/8" X 3 7/8"	1
78	PL36084	4" X 4 1/2" X 1 1/4" REFRACTORY BRICK	2
79	PL36233	3 1/2" X 6" X 1 1/4" REFRACTORY BRICK	2
80	PL36232	4" X 8 3/4" X 1 1/4" X 1/2" X 3 ¼" REFRACTORY BRICK	1

0046- Appendix D6 (page 66 of 75)

#	Item	Description	Qty
81	24096	ROUND CAST IRON ASH PLUG	1
82	PL56760	FRONT SECONDARY AIR TUBE	1
83	PL56761	MIDDLE FRONT SECONDARY AIR TUBE	1
84	PL56763	MIDDLE REAR SECONDARY AIR TUBE	1
85	PL56764	REAR SECONDARY AIR TUBE	1
86	21220	C-CAST BAFFLE 19 3/4" X 11 3/8" X 1 1/4"	2
87	PL48170	HEAT EXCHANGER SCRAPER	1
88	PL48173	POKER	1
89	AC05959	METALLIC BLACK STOVE PAINT - 342 g (12 oz) AEROSOL	1
90	SE45817	INSTRUCTION MANUAL KIT FOR HEATPRO	1
91	PL56814	PLENUM OUTLET BLOCK-OFF PLATE	5
92	PL56775	AIR JACKET TOP	1
93	PL56774	REAR AIR DEFLECTOR	1
94	30334	LEFT HOUSING SUPPORT FOR G10 BLOWER 10-458-085	1
95	30867	CLEVIS YOKES	1
96	SE56822	ROD RETAINER	1

PART 3 – FEATURES AND SAFETY

Please see **Part 1** for installation instructions.

Please see **Part 2** for operation, maintenance and troubleshooting instructions.

0046- Appendix D6 (page 67 of 75)

12 General information on HeatPro (DF03000)

12.1 Appliance performance (1)

Fuel type	Dry cordwood	
Recommended heating area[*]	1,500 to 3,500 ft² (139 à 325 m²)	
Firebox volume	4.9 ft³ (0.139 m³)	
Maximum burn time[*]	12 h	
Maximum input capacity (dry cordwood)(2)	421,000 BTU	
Overall heat output rate (min. to max.)(3)	19,243 BTU/h to 67,069 BTU/h (5.6 kW to 19.6 kW)	
Nominal heat output at 15lb/ft³ fuel loading density	100,000 BTU/h	
Average overall efficiency(4)	78.9 % (HHV)(5)	85.0 % (LHV)(6)
Delivered heat output rate (min. to max.)(7)	16,109 BTU/h to 54,578 BTU/h (4.7 kW to 16.0 kW)	
Average delivered efficiency(8)	64.8 % (HHV)(5)	70.2 % (LHV)(6)
Optimum efficiency(9)	85.8%	
Average particulate emissions rate(10)(11)	0.735 lb/mmBTU (0.316 g/MJ)	
Average CO(12)	N/A	
Average electrical power consumption (13)	360 Wh	

[*] Recommended heating area and maximum burn time may vary subject to location in home, chimney draft, heat loss factors, climate, fuel type and other variables. The recommended heating area for a given appliance is defined by the manufacturer as its capacity to maintain a minimum acceptable temperature considering that the space configuration and the presence of heat distribution systems have a significant impact in making heat circulation optimum.

(1) Values are as measured per CSA B415.1-10, except for the recommended heating area, firebox volume, maximum burn time and maximum input capacity. Performances based on a fuel load prescribed by the standard at 10 lb/ft³ and with a moisture content between 18% and 28%.

(2) Input value at 10 lb/ft³ fuel loading density and dry energy value of 8,600BTU/lb.

(3) Overall: Radiated and delivered heat together at10lb/ft³ fuel loading density over one total burn cycle.

(4) Efficiency based on delivered heat when allowing cycling from high to low burn to simulate thermostat demand.

(5) Higher Heating Value of the fuel.

(6) Lower Heating Value of the fuel.

(7) Delivered: Remotely provided to other rooms through ducting at 10 lb/ft³ fuel loading density over one total burn cycle.

(8) Efficiency based on radiated and delivered heat when allowing cycling from high to low burn to simulate thermostat demand.

(9) Optimum overall efficiency at a specific burn rate (LHV).

(10) Based on delivered heat output.

(11) This appliance is officially tested and certified by an independent agency.

(12) Carbon Monoxide. Based on overall heat output at 10 lb/ft³ fuel loading density.

(13) Unless stated otherwise, measures were taken directly at the main power source and include all electrical components present in the appliance.

0046- Appendix D6 (page 68 of 75)

12.2 General Features

Maximum log length	24" (610 mm) north-south**
Diameter of the flue collar	6 in. (152 mm)
Recommended connector pipe diameter	6 in. (152 mm)
Recommended chimney diameter	6 in. (152 mm)
Required type of chimney	CAN/ULC S629, UL 103 HT (2100 °F)
Baffle material	C-Cast
Alcove installation	Not approved
Mobile home installation‡	Not approved
Appliance weight (without option)	719 lb (326 kg)
Shipping weight (without option)	819 lb (371 kg)
Blower	Included
Filter	Non-Included: 15 in x 20 in x 1 in
Particulate emission standard	EPA / CSA B415.1-10
USA standard (safety)	UL 391
Canadian standard (safety)	CAN/CSA B366.1

*** East-west: through the door you see the longitudinal sides of the logs; north-south: through the door you see the tips of the logs.*

‡ *Mobile home (Canada) or manufactured home (USA): The US department of Housing and Urban Development describes "manufactured homes" better known as "mobile homes" as followed; buildings built on fixed wheels and those transported on temporary wheels/axles and set on a permanent foundation. In Canada, a mobile home is a dwelling for which the manufacture and assembly of each component is completed or substantially completed prior to being moved to a site for installation on a foundation and connection to service facilities and which conforms to the CAN/CSA-Z240 MH standard*.

0046- Appendix D6 (page 69 of 75)

12.2.1 Technical data HeatPro

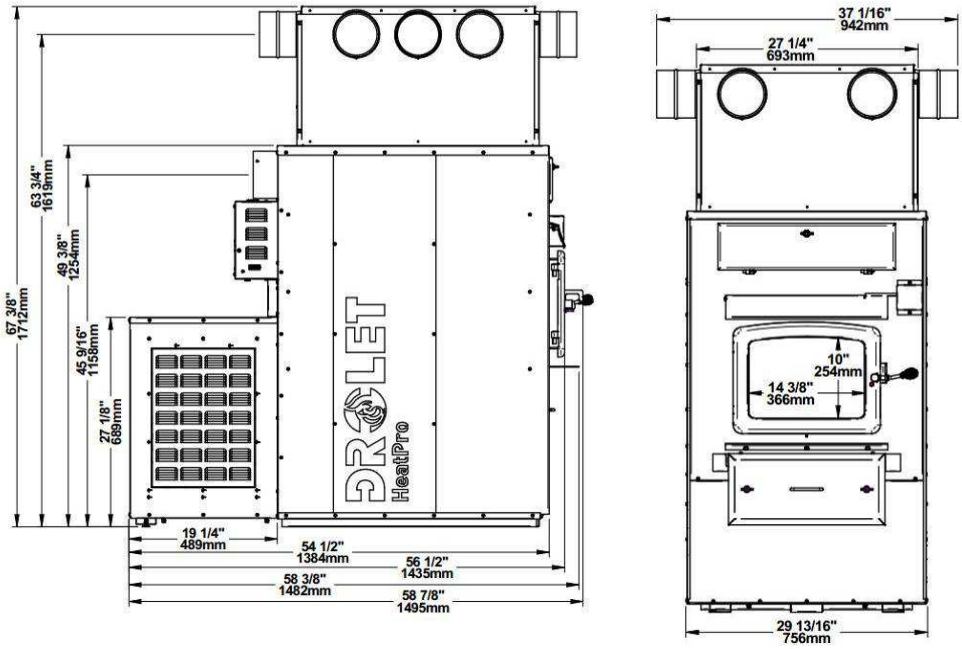

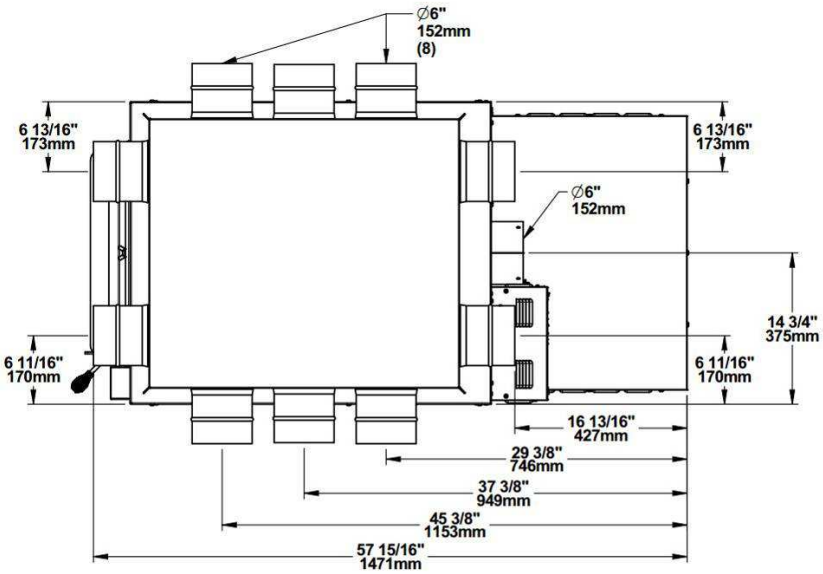

0046- Appendix D6 (page 70 of 75)

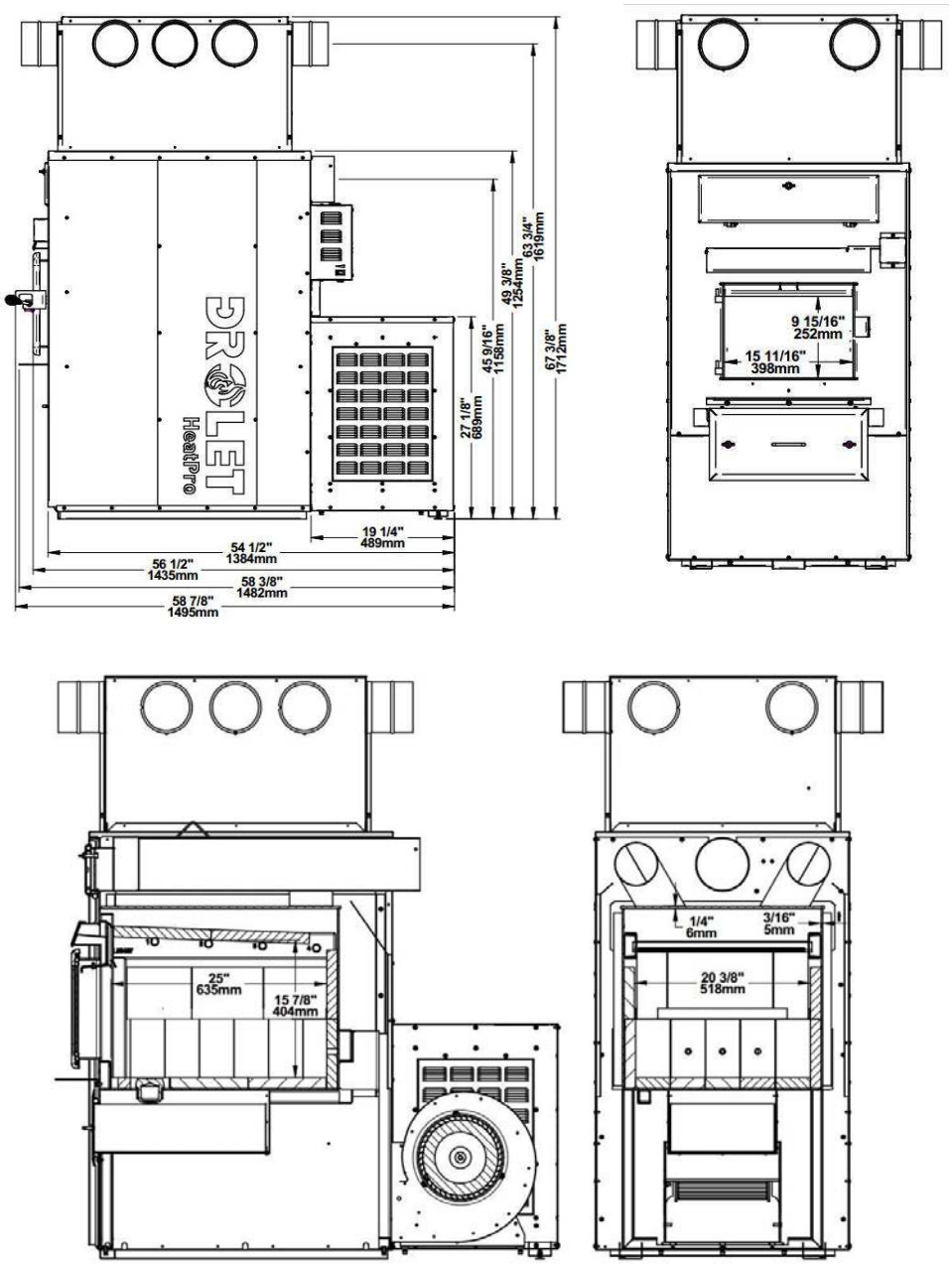

0046- Appendix D6 (page 71 of 75)

12.3 The benefits of low emissions and high efficiency

The low smoke emissions produced by the special features inside the Brand Model firebox mean that your household will release up to 90 percent less smoke into the outside environment than if you used an older conventional wood furnace. But there is more to the emission control technologies than protecting the environment.

The smoke released from wood when it is heated contains about half of the energy content of the fuel. By burning the wood completely, your furnace releases all the heat energy from the wood instead of wasting it as smoke up the chimney. Also, the features inside the firebox allow you to reduce the air supply to control heat output, while maintaining clean and efficient flaming combustion, which boosts the efficient delivery of heat to your home.

The emission control and advanced combustion features of your furnace can only work properly if your fuel is in the correct moisture content range of 15 to 20 percent. See **PART 2 –OPERATION, MAINTENANCE AND TROUBLESHOOTING** for suggestions on preparing fuel wood and judging its moisture.

12.4 The SBI commitment to you and the environment

The SBI team is committed to protecting the environment, so we do everything we can to use only materials in our products that will have no lasting negative impact on the environment.

12.4.1 What is your new furnace made of?

The body of your furnace, which is most of its weight, is carbon steel. Should it ever become necessary many years in the future, almost the entire furnace can be recycled into new products, thus eliminating the need to mine new materials.

The paint coat on your furnace is very thin. Its VOC content (Volatile Organic Components) is very low. VOCs can be responsible for smog, so all the paint used during the manufacturing process meets the latest air quality requirements with regards to VOC reduction or elimination.

The air tubes are stainless steel, which can also be recycled.

The C-Cast baffle is made of an aluminosilicate fibre material that is compressed with a binder to form a rigid board. C-Cast can withstand temperatures above 2,000 °F. It is not considered hazardous waste. Disposal at a landfill is recommended.

Lightweight firebrick is made of pumice and cement. Pumice is in fact volcanic rock, a naturally green product found in the Northwest United States. Disposal at a landfill is recommended.

The door and glass gaskets are fibreglass which is spun from melted sand. Black gaskets have been dipped into a solvent-free solution. Disposal at a landfill is recommended.

The door glass is a 5 mm thick ceramic material that contains no toxic chemicals. It is basically made of raw earth materials such as sand and quartz that are combined in such a way to form a glass at high temperatures. Ceramic glass will not remelt in the same way as normal glass, so it should not be recycled with your regular household products. Disposal at a landfill is recommended.

0046- Appendix D6 (page 72 of 75)

13 Safety information

13.1 Cautions and warnings

- **A CARBON MONOXIDE (CO) DETECTOR/ALARM IS REQUIRED IN THE ROOM IN WHICH THE FURNACE IS INSTALLED.**
- **HOT WHILE IN OPERATION, KEEP CHILDREN, CLOTHING AND FURNITURE AWAY. CONTACT MAY CAUSE SKIN BURNS. GLOVES MAY BE NEEDED FOR THE FURNACE OPERATION.**
- **USING A FURNACE WITH CRACKED OR BROKEN COMPONENTS, SUCH AS GLASS OR FIREBRICKS OR BAFFLES MAY PRODUCE AN UNSAFE CONDITION AND MAY DAMAGE THE FURNACE.**
- **OPEN THE AIR CONTROL FULLY BEFORE OPENING FIRING DOOR.**
- **OPERATE ONLY WITH THE DOOR FULLY CLOSED. IF THE DOOR IS LEFT PARTLY OPEN, GAS AND FLAME MAY BE DRAWN OUT OF THE OPENING, CREATING RISKS FROM BOTH FIRE AND SMOKE.**
- **WARNING: AN EXCESSIVE DRAFT MAY CAUSE OVERHEATING AND MAKE THE CONTROL OF THE FIRE DIFFICULT.**
- **THIS FURNACE IS NOT DESIGNED TO BE USED WITH THE DOOR OPEN. THE DOOR MAY BE OPEN ONLY DURING LIGHTING PROCEDURES OR RELOADING. DO NOT LEAVE THE FURNACE UNATTENDED WHEN THE DOOR IS SLIGHTLY OPEN DURING IGNITION. ALWAYS CLOSE THE DOOR AFTER IGNITION.**
- **NEVER USE GASOLINE, GASOLINE-TYPE LANTERN FUEL (NAPHTHA), FUEL OIL, MOTOR OIL, KEROSENE, CHARCOAL LIGHTER FLUID, OR SIMILAR LIQUIDS OR AEROSOLS TO START OR 'FRESHEN UP' A FIRE IN THIS FURNACE. KEEP ALL SUCH LIQUIDS OR AEROSOLS WELL AWAY FROM THE FURNACE WHILE IT IS IN USE.**
- **DO NOT STORE FUEL WITHIN HEATER MINIMUM INSTALLATION CLEARANCES.**
- **BURN ONLY SEASONED NATURAL FIREWOOD.**
- **DO NOT BURN:**
    - **GARBAGE OF ANY KIND,**
    - **COAL OR CHARCOAL,**
    - **TREATED, PAINTED OR COATED WOOD,**
    - **PLYWOOD OR PARTICLE BOARD,**
    - **FINE PAPER, COLORED PAPER OR CARDBOARD,**
    - **ALL MANUFACTURED LOGS,**
    - **SALT WATER DRIFTWOOD OR**
    - **RAILROAD TIES.**
- **DO NOT USE LIQUIDS SUCH AS KEROSENE OR DIESEL FUEL TO START A FIRE.**

0046- Appendix D6 (page 73 of 75)

- **DO NOT ELEVATE THE FIRE BY USING A GRATE IN THIS FURNACE.**
- **DO NOT INSTALL AN AUTOMATIC FEEDER ON THIS FURNACE.**
- **DO NOT INSTALL A MANUAL DAMPER ON THIS FURNACE.**
- **THIS APPLIANCE SHOULD BE MAINTAINED AND OPERATED AT ALL TIMES IN ACCORDANCE WITH THESE INSTRUCTIONS.**
- **DO NOT USE FLAMMABLE LIQUIDS SUCH AS GASOLINE, NAPHTHA, FUEL OIL, MOTOR OIL, OR AEROSOLS TO START OR REKINDLE THE FIRE.**
- **WARNING: IT IS IMPORTANT THAT THE FIRING DOOR, THE ASH DRAWER AND THE ASH PLUG BE KEPT CLOSED WHILE THE APPLIANCE IS IN USE. MAINTAIN ALL GASKETS, IF ANY, IN GOOD CONDITION; IN CASE OF DETERIORATION, CONTACT YOUR DEALER FOR A GENUINE REPLACEMENT GASKET.**
- **THE INFORMATION GIVEN ON THE CERTIFICATION LABEL AFFIXED TO THE APPLIANCE ALWAYS OVERRIDES THE INFORMATION PUBLISHED, IN ANY OTHER MEDIA (OWNER'S MANUAL, CATALOGUES, FLYERS, MAGAZINES AND/OR WEB SITES).**
- **MIXING OF CHIMNEY COMPONENTS FROM DIFFERENT SOURCES OR MODIFYING FURNACE COMPONENTS MAY RESULT IN HAZARDOUS CONDITIONS. WHERE ANY SUCH CHANGES ARE PLANNED, STOVE BUILDERS INTERNATIONAL INC. SHOULD BE CONTACTED IN ADVANCE.**
- **ANY MODIFICATION OF THE APPLIANCE THAT HAS NOT BEEN APPROVED IN WRITING BY THE TESTING AUTHORITY VIOLATES CSA B365 (CANADA), AND NFPA 90B (USA).**
- **IF REQUIRED, A SUPPLY OF COMBUSTION AIR SHALL BE PROVIDED TO THE ROOM OR SPACE.**
- **DO NOT STORE NEAR THE WOOD FURNACE. RESPECT THE PRESCRIBED CLEARANCE BETWEEN COMBUSTIBLES AND HEAT.**
- **DO NOT CONNECT THIS UNIT TO A CHIMNEY FLUE SERVING ANOTHER APPLIANCE.**
- **DO NOT INSTALL IN A MOBILE HOME**
- **DO NOT INSTALL IN AN ALCOVE**
- **THIS APPLIANCE MUST BE INSTALLED IN ACCORDANCE WITH THE INSTRUCTIONS ON THE CERTIFICATION LABEL APPLIED ON THE UNIT.**
- **NO PART OF THE FURNACE OR FLUE PIPE MAY BE LOCATED CLOSER TO COMBUSTIBLE THAN THE MINIMUM CLEARANCE FIGURES GIVEN.**

WARNING: Respect the local codes (when in doubt, consult your local dealer).

0046- Appendix D6 (page 74 of 75)

13.2 Smoke detector

We highly recommend the use of a smoke detector. It must be installed at least 15 feet (4.57 m) from the appliance in order to prevent undue triggering of the detector when reloading.

13.3 Chimney fire

A Chimney fire will happen when the flame from an uncontrollable fire ignites the sooth and creosote deposits in a neglected venting system. It will often happen when burning cardboard, branches or small dry pieces of wood. The first signs of a chimney fire are:

1. A rumble.
2. Smoke pipe becomes extremely hot.
3. Sparks or even flames shoot out of the chimney

In the event of a chimney fire, first call your local fire department and water the roof in the vicinity of the chimney.

Make sure that the furnace door and the air intake damper are closed (if need be, lower the thermostat setting and CLOSE the barometric draft damper manually if one is installed). Close also the switch on the control box.

In the event of uncontrollable fire (caused by a wrongful operation or excessive chimney draft), follow the same procedure as in a chimney fire but you must then OPEN the barometric draft damper manually if one is installed.

0046- Appendix D6 (page 75 of 75)

DROLET LIMITED LIFETIME WARRANTY

The warranty of the manufacturer extends only to the original retail purchaser and is not transferable. This warranty covers brand new products only, which have not been altered, modified nor repaired since shipment from the factory. Proof of purchase (dated bill of sale), model name and serial number must be supplied when making any warranty claim to your DROLET dealer.

This warranty applies to normal residential use only. Damages caused by misuse, abuse, improper installation, lack of maintenance, over firing, negligence or accident during transportation, power failures, downdrafts, venting problems or an underestimated heating area are not covered by this warranty. The recommended heated area for a given appliance is defined by the manufacturer as its capacity to maintain a minimum acceptable temperature in the designated area in case of a power failure.

This warranty does not cover any scratch, corrosion, distortion, or discoloration. Any defect or damage caused by the use of unauthorized or other than original parts voids this warranty. An authorized qualified technician must perform the installation in accordance with the instructions supplied with this product and all local and national building codes. Any service calls related to an improper installation is not covered by this warranty.

The manufacturer may require that defective products be returned or that digital pictures be provided to support the claim. Returned products are to be shipped prepaid to the manufacturer for investigation. Transportation fees to ship the product back to the purchaser will be paid by the manufacturer. Repair work covered by the warranty, executed at the purchaser's domicile by an authorized qualified technician requires the prior approval of the manufacturer. All parts and labour costs covered by this warranty are limited according to the table below.

The manufacturer, at its discretion, may decide to repair or replace any part or unit after inspection and investigation of the defect. The manufacturer may, at its discretion, fully discharge all obligations with respect to this warranty by refunding the wholesale price of any warranted but defective parts. The manufacturer shall, in no event, be responsible for any uncommon, indirect, consequential damages of any nature, which are in excess of the original purchase price of the product. A one-time replacement limit applies to all parts benefiting from lifetime coverage. This warranty applies to products purchased after March 1st, 2015.

DESCRIPTION	WARRANTY APPLICATION*	
	PARTS	LABOUR
Combustion chamber (welds only) and cast iron door frame.	Lifetime	3 years
Surrounds, heat shields, ash drawer, steel legs, pedestal, trims (aluminum extrusions), plating (defective manufacture**), and convector air-mate.	5 years	3 years
Removable stainless steel combustion chamber components, secondary air tubes**, deflectors, and supports.	5 years	N/A
Glass retainers, handle assembly, and air control mechanism.	3 years	1 year
Carbon steel combustion chamber components, vermiculite baffle**, and C-Cast baffle**.	2 years	N/A
Standard blower, heat sensors, switches, rheostat, wiring, and other controls.	1 year	1 year
Optional blower, paint (peeling**), ceramic glass (thermal breakage only**), ceramic fibre blankets, gaskets, insulation, and other options.	1 year	N/A
Firebricks.	N/A	N/A
All parts replaced under the warranty.	90 days	N/A

Subject to limitations above.** ***Picture required.

Labour costs and repair work to the account of the manufacturer are based on a predetermined rate schedule and must not exceed the wholesale price of the replacement part.

Shall your unit or a component be defective, contact immediately your **DROLET** dealer. To accelerate processing of your warranty claim, make sure to have on hand the following information when calling:

- Your name, address and telephone number;
- Bill of sale and dealer's name;
- Installation configuration;
- Serial number and model name as indicated on the nameplate fixed to the back of your unit;
- Nature of the defect and any relevant information.

Before shipping your unit or defective component to our plant, you must obtain an Authorization Number from your DROLET dealer. Any merchandise shipped to our plant without authorization will be refused automatically and returned to the sender.

005- Appendix E- Dry Gas meter Calibration Data

Dry Gas Meter Calibration Data

Appendix E

005- Appendix E- Dry Gas meter Calibration Data (page 2 of 2)

Date: 10-déc-09

Système 1

Pression atmosphérique: 30.13 DGM Référence: 0.99

DGM Référence					DGM en vérification:_____					
DGM avant	DGM après	Différentiel	Température F	Standard	DGM avant	DGM après	Différentiel	Température F	Standard	Facteur
744.500	749.500	5.000	61.4	5.099	21.355	26.327	4.972	62.1	5.063	0.997
751.100	756.700	5.600	65.7	5.664	27.957	33.541	5.584	68.1	5.622	0.997
759.000	764.000	5.000	68.8	5.027	35.877	40.875	4.998	71.1	5.004	0.995
									Moyenne	0.996

Système 2

Pression atmosphérique: 30.13 DGM Référence: 0.99

DGM Référence					DGM en vérification:_____					
DGM avant	DGM après	Différentiel	Température F	Standard	DGM avant	DGM après	Différentiel	Température F	Standard	Facteur
764.700	769.700	5.000	73.3	4.985	935.295	940.294	4.999	74.8	4.970	0.993
751.100	756.700	5.600	65.7	5.664	944.653	949.677	5.024	77.2	4.973	1.128
759.000	764.000	5.000	68.8	5.027	950.928	955.952	5.024	77.8	4.967	1.002
									Moyenne	1.041

006- Appendix F- Pre Burn Documentation

Unit Pre-burn Documentation

Appendix F

006- Appendix F- Pre Burn Documentation (page 2 of 2)

	Flue temp 1	Room temp 2		Flue	Room
start 10 hour	0	73.9334	305	232.1851	74.44228
5	172.4751	75.05896	310	226.714	74.54275
10	264.8345	74.94857	315	219.4825	74.60168
15	364.289	75.54978	320	213.2499	74.88711
20	382.9191	76.22678	325	206.8204	74.5309
25	388.0562	76.82974	restart unit	383.442	69.0807
30	398.1403	76.83173	330	505.9367	69.43323
35	463.7276	76.46715	335	515.1436	69.74893
40	513.262	77.80788	340	503.1603	70.09181
45	471.6494	77.21535	345	477.5676	70.66514
50	439.3183	76.85341	350	455.1772	70.35816
55	463.7751	77.08356	355	419.848	70.33222
60	431.7318	77.59357	360	395.2943	70.71236
65	407.7088	77.53925	365	384.1484	70.35893
70	400.8734	76.81346	370	369.1328	70.88153
75	410.0133	76.70808	375	365.9071	70.80064
80	405.5407	76.06146	380	360.8011	70.78197
85	397.8739	76.51583	385	347.4768	69.78613
90	400.2488	76.24489	390	344.7835	69.52245
95	404.4889	76.21577	395	337.1006	69.30133
100	409.3679	76.45264	400	323.9933	69.32492
105	408.5968	76.83768	405	469.6898	70.37915
110	404.2775	76.83455	410	458.0019	75.5432
115	401.96	76.71886	415	452.9298	75.90143
120	627.2421	77.86852	420	470.5443	76.23299
125	553.9256	76.93537	425	627.2667	77.4136
130	601.9713	77.16518	430	512.6243	77.74486
135	628.31	77.60307	435	413.7201	77.17079
140	702.6272	77.54472	440	378.4814	76.94617
145	730.9056	77.65343	445	353.1526	76.27247
150	700.4978	76.7589	450	391.7495	76.57512
155	687.6428	76.91676	455	459.1945	77.04795
160	654.7199	77.50117	460	383.2263	75.25153
165	613.3896	77.67841	465	343.1758	74.97853
170	591.2026	76.87631	470	479.589	74.83328
175	542.6265	76.69078	475	475.2456	74.18731
180	488.9243	76.63837	480	446.9995	73.42976
185	460.1927	75.8905	485	426.8355	72.80869
190	438.2375	75.43523	490	383.8327	73.76712
195	421.3232	75.77839	495	349.8981	73.95966
200	414.4415	75.62578	500	328.6296	73.76012
205	401.5344	75.93112	505	313.6314	73.6477
210	389.9387	75.3046	510	300.8112	74.39054
215	385.7026	75.94408	515	297.7281	74.34663
220	365.8532	75.52618	520	301.2002	74.48083
225	356.3285	75.55222	525	411.9213	74.70531
230	346.4294	75.54677	530	617.649	77.12649
235	338.6469	75.07708	535	647.2404	78.45135
240	324.5794	74.88214	540	656.577	78.88329
245	315.8225	74.85571	545	653.4655	79.44059
250	307.8806	75.30966	550	439.5343	79.31413
255	302.1961	75.08421	555	394.6878	77.54453
260	298.2846	74.79089	560	365.8533	76.56272
265	293.8272	73.97896	565	456.6682	76.18237
270	286.9966	74.7077	570	512.0994	75.72642
275	277.2476	74.46941	575	507.6697	76.15107
280	269.1551	75.21347	580	496.8531	75.98278
285	261.11	74.90643	585	485.6998	75.63737
290	250.5059	74.61298	590	481.3775	75.73029
295	243.1456	74.66042	595	457.7219	75.08737
300	238.2234	74.41124	600	436.159	75.06914

10 hour pre burn.xls Raw Data Max Caddy

Project : 3198245

007- Appendix G- Stack Loss Efficiency Data/results

Stack Loss Efficiency data/Results

Appendix G

007- Appendix G- Stack Loss Efficiency Data/results (page 2 of 46)

VERSION: 2.4 2010-04-15

Manufacturer: SBI
Model: Max Caddy
Date: 2010-01-15
Run: 4
Control #: 3198245/20712-0000121
Test Duration: 320
Output Category: 3

Wood Moisture (% wet): 17.30
Load Weight (lb wet): 48.59
Burn Rate (dry kg/h): 3.42
Total Particulate Emissions: 32.29 g

Appliance Type: Non-Cat (Cat, Non-Cat, Pellet)

Temp. Units F (F or C)
Weight Units lb (kg or lb)

Fuel Data

	D. Fir	
HHV	19 887	kJ/kg
%C	50	
%H	6.6	
%O	42.9	
%Ash	0.5	

Default Fuel Values

	D. Fir	Oak
HHV (kJ/kg)	19 810	19 887
%C	48.73	50
%H	6.87	6.6
%O	43.9	42.9
%Ash	0.5	0.5

Note 1: For other fuels, use the heating value and fuel composition determined by analysis of fuel sample in accordance with Clause 9.2.

Note 2: In cases where the "Fuel Weight Remaining" is the same for three or more readings in a row, a "divide by zero error" will occur in the calculation sheet. In such cases, adjust the weight values by interpolation between the first occurence and the next reading showing a decrease in weight.

	Averages	0.36	5.71	14.22	292.94	85.26
					Temp. (ºF)	
Elapsed Time (min)	Fuel Weight Remaining (lb)	Flue Gas Composition (%) CO	CO_2	O_2	Flue Gas	Room Temp
0	48.59	0.29	4.90	14.90	277.2	86.2
10	42.47	0.98	15.12	4.28	452.7	84.2
20	37.37	0.73	14.72	4.76	475.7	84.9
30	32.97	0.32	14.20	6.24	468.9	85.3
40	29.12	0.18	11.76	9.05	437.4	86.2
50	25.57	0.19	11.00	9.85	423.5	86.5
60	22.22	0.18	10.46	10.53	414.9	85.3
70	19.07	0.18	9.69	10.94	400.1	85.6
80	16.37	0.15	9.09	11.34	387.1	86.5
90	14.22	0.16	7.56	12.58	356.0	85.1
100	12.32	0.16	7.42	12.63	348.4	85.3
110	10.72	0.18	6.83	12.80	335.7	86.0
120	9.37	0.22	6.26	13.43	320.9	84.4
130	8.37	0.32	4.98	14.67	295.9	84.9
140	7.62	0.46	4.10	15.25	273.9	84.7
150	6.97	0.52	3.82	15.78	261.0	86.7
160	6.32	0.44	3.84	15.85	260.2	85.1
170	5.62	0.41	3.77	15.83	259.7	85.5
180	5.12	0.39	3.42	16.24	250.5	85.1
190	4.67	0.48	3.15	16.51	236.8	84.7
200	4.17	0.43	3.21	16.51	235.2	85.3
210	3.67	0.45	3.22	16.49	234.9	85.3
220	3.27	0.39	3.28	16.51	234.9	84.9
230	2.82	0.41	3.05	16.75	229.8	86.5
240	2.42	0.40	2.59	17.21	221.2	87.3
250	2.07	0.39	2.39	17.48	213.6	85.6
260	1.67	0.39	2.29	17.62	207.5	86.4
270	1.37	0.37	2.24	17.69	203.0	85.3
280	1.07	0.36	2.10	17.84	196.9	84.6
290	0.77	0.36	2.05	17.89	192.9	83.3
300	0.52	0.37	2.02	17.94	189.1	83.7
310	0.22	0.36	2.00	17.94	187.0	83.5
320	-0.03	0.32	1.96	18.05	184.6	83.7

007- Appendix G- Stack Loss Efficiency Data/results (page 3 of 46)

Manufacturer: SBI
Model: Max Caddy
Date: 01-15-10
Run: 4
Control #: 3245/20712-0000121
Test Duration: 320 min

	HHV	LHV
Eff	74.19%	79.91%
Comb Eff	96.39%	96.39%
HT Eff	76.97%	82.90%
Output	50 437	kJ/h
Burn Rate	3.42	kg/h
Grams CO	1 008	g
Input	67 985	kJ/h
MC wet	17.30	

Note: In the "Input data", "Calc. % O_2", "Fuel Properties", and "Mass Balance" columns, [e], [d], [g], [a], [b], [c], [h], [u], [w], [j], and [k] refer to their respective variables in Clauses 13.7.3 to 13.7.5.

Ultimate CO_2
$CO_{2\text{-ult}}$ 19.80
F_0
1.051

Overall Heating Efficiency: 74.19%
Combustion Efficiency: 96.39%
Heat Transfer Efficiency: 76.97%

Air Fuel Ratio (A/F)	
Dry Molecular Weight (M_d)	29.50
Dry Moles Exhaust Gas (N_d):	574.82
Air Fuel Ratio (A/F)	16.45

%HC 1.32

Heat Output: 47 845 Btu/h 50 437 kJ/h
Heat Input: 64 491 Btu/h 67 985 kJ/h

Burn Duration: 5.33 h

Burn Rate: 7.53 lb/h 3.419 kg/h

Stack Temp: 293.4 Deg. F 145.2 Deg. C

Combustion Efficiency:
Total Input (kJ):
Total Output (kJ):
Efficiency:
Total CO (g):

				3.64	20.59	14.70	144.97	29.59	93.7%	74.4%	69.8%	28.12	5.35	75.74	4.42	75.74	363294	4.17	6.60	2.68	19887.00
									Combust	Heat	Net	Air	Wet Wt	% Wet	Dry Wt.	% Dry					
Elapsed Time	Weight Remaining (kg)	% CO [e]	% CO_2 [d]	Excess Air EA	Total O_2	Calc. % O_2 [g]	Flue Gas (°C)	Room Temp (°C)	Eff %	Transfer %	Eff %	Fuel Ratio	Now Wt	Consumed x	Now Wt_{dn}	Comsumed y	Total Input	Carbon /12= [a]	Hydrogen /1= [b]	Oxygen /16= [c]	Calorific Value
	INPUT DATA			Oxygen Calculation			Input Data											Fuel Properties			
0	22.05	0.29	4.90	281.5%	20.64	15.60	136.2	30.1	96.1%	75.7%	72.7%	23.2	22.05	0.00	18.23	0.00	0	4.17	6.60	2.68	19887.00
10	19.27	0.98	15.12	23.0%	20.01	4.40	233.7	29.0	94.9%	79.3%	75.3%	7.5	19.27	12.60	15.94	12.60	64697	4.17	6.60	2.68	19887.00
20	16.96	0.73	14.72	28.2%	20.05	4.97	246.5	29.4	96.0%	78.5%	75.4%	7.8	16.96	23.09	14.02	23.09	35445	4.17	6.60	2.68	19887.00
30	14.96	0.32	14.20	36.4%	20.11	5.75	242.7	29.6	98.2%	78.5%	77.1%	8.4	14.96	32.15	12.37	32.15	30781	4.17	6.60	2.68	19887.00
40	13.21	0.18	11.76	65.8%	20.25	8.40	225.2	30.1	98.9%	77.8%	76.9%	10.2	13.21	40.07	10.93	40.07	27610	4.17	6.60	2.68	19887.00
50	11.60	0.19	11.00	77.0%	20.30	9.20	217.5	30.3	98.8%	77.6%	76.7%	10.9	11.60	47.38	9.59	47.38	25744	4.17	6.60	2.68	19887.00
60	10.08	0.18	10.46	86.1%	20.33	9.78	212.7	29.6	98.8%	77.4%	76.5%	11.4	10.08	54.27	8.34	54.27	24252	4.17	6.60	2.68	19887.00
70	8.65	0.18	9.69	100.6%	20.37	10.59	204.5	29.8	98.7%	77.2%	76.2%	12.3	8.65	60.75	7.16	60.75	21827	4.17	6.60	2.68	19887.00
80	7.43	0.15	9.09	114.3%	20.41	11.24	197.3	30.3	99.0%	77.0%	76.2%	13.1	7.43	66.31	6.14	66.31	18096	4.17	6.60	2.68	19887.00
90	6.45	0.16	7.56	156.5%	20.50	12.86	180.0	29.5	98.7%	76.3%	75.3%	15.7	6.45	70.73	5.34	70.73	15111	4.17	6.60	2.68	19887.00
100	5.59	0.16	7.42	161.2%	20.50	13.00	175.8	29.6	98.7%	76.5%	75.5%	16.0	5.59	74.64	4.62	74.64	13059	4.17	6.60	2.68	19887.00
110	4.86	0.18	6.83	182.5%	20.54	13.62	168.7	30.0	98.4%	76.2%	74.9%	17.3	4.86	77.94	4.02	77.94	11007	4.17	6.60	2.68	19887.00
120	4.25	0.22	6.26	205.6%	20.57	14.20	160.5	29.1	97.7%	75.8%	74.1%	18.7	4.25	80.72	3.52	80.72	8768	4.17	6.60	2.68	19887.00
130	3.80	0.32	4.98	273.6%	20.64	15.50	146.6	29.4	95.7%	74.4%	71.2%	22.7	3.80	82.77	3.14	82.77	6529	4.17	6.60	2.68	19887.00
140	3.46	0.46	4.10	334.3%	20.68	16.35	134.4	29.3	92.4%	73.2%	67.7%	26.3	3.46	84.32	2.86	84.32	5223	4.17	6.60	2.68	19887.00
150	3.16	0.52	3.82	356.3%	20.69	16.61	127.2	30.4	90.9%	73.5%	66.8%	27.5	3.16	85.66	2.62	85.66	4850	4.17	6.60	2.68	19887.00
160	2.87	0.44	3.84	362.7%	20.69	16.63	126.8	29.5	92.3%	73.5%	67.9%	28.0	2.87	86.99	2.37	86.99	5037	4.17	6.60	2.68	19887.00
170	2.55	0.41	3.77	373.7%	20.70	16.72	126.5	29.7	92.8%	73.3%	68.0%	28.7	2.55	88.43	2.11	88.43	4477	4.17	6.60	2.68	19887.00
180	2.32	0.39	3.42	419.7%	20.72	17.11	121.4	29.5	92.5%	72.7%	67.3%	31.5	2.32	89.46	1.92	89.46	3545	4.17	6.60	2.68	19887.00
190	2.12	0.48	3.15	445.5%	20.73	17.34	113.8	29.3	90.1%	72.8%	65.5%	32.9	2.12	90.39	1.75	90.39	3545	4.17	6.60	2.68	19887.00
200	1.89	0.43	3.21	444.0%	20.73	17.31	112.9	29.6	91.3%	73.3%	66.9%	32.9	1.89	91.42	1.56	91.42	3731	4.17	6.60	2.68	19887.00
210	1.67	0.45	3.22	439.6%	20.73	17.28	112.7	29.6	90.9%	73.4%	66.7%	32.6	1.67	92.45	1.38	92.45	3358	4.17	6.60	2.68	19887.00
220	1.48	0.39	3.28	439.6%	20.73	17.25	112.7	29.4	92.3%	73.7%	68.0%	32.7	1.48	93.27	1.23	93.27	3171	4.17	6.60	2.68	19887.00
230	1.28	0.41	3.05	472.3%	20.74	17.49	109.9	30.3	91.3%	73.3%	66.9%	34.6	1.28	94.20	1.06	94.20	3171	4.17	6.60	2.68	19887.00
240	1.10	0.40	2.59	562.3%	20.77	17.98	105.1	30.7	90.3%	71.8%	64.8%	40.0	1.10	95.02	0.91	95.02	2798	4.17	6.60	2.68	19887.00
250	0.94	0.39	2.39	612.3%	20.78	18.20	100.9	29.8	89.9%	71.3%	64.1%	43.0	0.94	95.74	0.78	95.74	2798	4.17	6.60	2.68	19887.00
260	0.76	0.39	2.29	638.9%	20.79	18.30	97.5	30.2	89.5%	71.5%	64.0%	44.6	0.76	96.56	0.63	96.56	2612	4.17	6.60	2.68	19887.00
270	0.62	0.37	2.24	658.7%	20.79	18.37	95.0	29.6	89.9%	71.7%	64.4%	45.8	0.62	97.18	0.51	97.18	2239	4.17	6.60	2.68	19887.00
280	0.49	0.36	2.10	705.0%	20.80	18.52	91.6	29.2	89.7%	71.4%	64.0%	48.6	0.49	97.80	0.40	97.80	2239	4.17	6.60	2.68	19887.00
290	0.35	0.36	2.05	721.7%	20.80	18.57	89.4	28.5	89.5%	71.4%	63.9%	49.6	0.35	98.42	0.29	98.42	2052	4.17	6.60	2.68	19887.00
300	0.24	0.37	2.02	728.5%	20.80	18.60	87.3	28.7	89.0%	71.9%	64.0%	50.0	0.24	98.93	0.20	98.93	2052	4.17	6.60	2.68	19887.00
310	0.10	0.36	2.00	739.1%	20.80	18.62	86.1	28.6	89.2%	72.0%	64.3%	50.7	0.10	99.55	0.08	99.55	2761	4.17	6.60	2.68	19887.00
320	-0.01	0.32	1.96	768.5%	20.81	18.69	84.8	28.7	90.4%	72.2%	65.2%	52.6	-0.01	100.06	-0.01	100.06	709	4.17	6.60	2.68	19887.00

007- Appendix G- Stack Loss Efficiency Data/results (page 4 of 46)

Moisture Content M_{Cwb}: 17.3

96.39%
362 585 343 895 (Btu)
268 999 255 132 (Btu)
74.19%
1007.68

Moisture of Wood (wet basis): 17.3
Initial Dry Weight Wt_{do} (kg): 18.23
Moisture Content Dry 20.92

Dry kg : 18.23
CA: 50
HY: 6.6
OX: 42.9

Load Weight (kg): **22.05**

Fuel Heating	HHV	LHV		HHV	LHV
Value in kJ/kg - CV:	**19 887**	**18 464**	Btu/lb	**8555.6**	**7943.4**

17.30	79.23	21.02	1.46	4.78	0.03	0.15	38.02	161.72	3.60	0.26	770.55	32.64	11.62	418.12	4651.60	3475.93	3374.01	3337.89	4532.04	4035.61	302.74	5976.90	13481.16
Mw Moisture	Mass Balance (moles/100 mole dry flue gas)					kg Wood per 100 mole dfp	Moles per kg of Dry Wood						Moisture	Stack Temp	Heat Content Change - Ambient to Stack Temperature Flue Gas Constituent						Room Temp		
Fuel Burnt	[h]	[u]	[w]	[j]	[k]	Nk	CO_2	O_2	CO	HC	N_2	H_2O	Present	K	CO_2	O_2	CO	N_2	CH_4	H_2O	K	CO_2	O_2
17.30	79.21	21.01	1.25	4.09	0.02	0.12	39.41	125.43	2.33	0.14	637.06	32.89	11.62	409.35	4230.49	3181.80	3093.59	3059.40	4076.77	3701.82	303.25	166.71	399.11
17.30	79.50	21.09	3.90	12.59	0.13	0.39	39.00	11.36	2.53	0.35	205.06	32.47	11.62	506.85	8448.07	6227.49	6023.75	5963.71	8417.88	7198.20	302.15	329.49	70.76
17.30	79.58	21.11	3.73	12.12	0.10	0.37	39.65	13.38	1.97	0.26	214.35	32.64	11.62	519.65	9001.38	6617.62	6396.67	6333.85	9008.04	7642.41	302.55	356.89	88.54
17.30	79.73	21.15	3.49	11.46	0.04	0.35	40.85	16.53	0.92	0.11	229.37	32.95	11.62	515.85	8824.41	6492.24	6276.66	6214.78	8820.59	7499.42	302.75	360.47	107.31
17.30	79.66	21.13	2.87	9.44	0.01	0.29	41.20	29.44	0.63	0.04	279.08	33.08	11.62	498.35	8030.94	5928.93	5737.20	5679.55	7982.67	6856.51	303.25	330.89	174.57
17.30	79.61	21.12	2.69	8.85	0.01	0.27	41.12	34.40	0.71	0.05	297.58	33.07	11.62	490.65	7685.39	5682.54	5500.96	5445.22	7620.13	6574.87	303.45	316.01	195.47
17.30	79.58	21.11	2.56	8.41	0.01	0.25	41.13	38.45	0.71	0.04	312.90	33.08	11.62	485.85	7502.47	5553.55	5377.66	5322.84	7425.03	6428.00	302.75	308.56	213.53
17.30	79.54	21.10	2.37	7.81	0.01	0.24	41.07	44.90	0.76	0.04	337.15	33.09	11.62	477.65	7138.02	5292.48	5127.04	5074.31	7045.27	6129.12	302.95	293.19	237.64
17.30	79.52	21.09	2.22	7.31	0.00	0.22	41.18	50.94	0.68	0.02	360.22	33.13	11.62	470.45	6807.18	5054.18	4897.93	4847.19	6703.41	5855.79	303.45	280.32	257.45
17.30	79.42	21.07	1.85	6.11	0.00	0.18	40.99	69.71	0.87	0.01	430.68	33.14	11.62	453.15	6095.11	4542.56	4406.38	4359.83	5964.83	5269.46	302.65	249.86	316.68
17.30	79.42	21.07	1.82	6.00	0.00	0.18	40.98	71.82	0.88	0.01	438.60	33.14	11.62	448.95	5912.28	4410.07	4278.80	4233.41	5777.62	5117.20	302.75	242.28	316.74
17.30	79.37	21.05	1.68	5.55	0.00	0.17	40.78	81.30	1.07	0.03	473.86	33.11	11.62	441.85	5595.50	4179.66	4056.70	4013.35	5455.21	4852.04	303.15	228.16	339.79
17.30	79.32	21.04	1.56	5.12	0.01	0.15	40.40	91.62	1.42	0.06	511.89	33.05	11.62	433.65	5283.67	3954.29	3839.84	3798.42	5134.61	4593.26	302.25	213.45	362.30
17.30	79.20	21.01	1.28	4.17	0.02	0.13	39.19	121.94	2.52	0.17	623.28	32.83	11.62	419.75	4689.56	3519.79	3420.42	3382.99	4535.10	4092.34	302.55	183.78	429.20
17.30	79.09	20.98	1.10	3.56	0.04	0.11	37.32	148.82	4.19	0.37	719.97	32.43	11.62	407.55	4186.66	3150.58	3063.67	3029.72	4030.69	3666.15	302.45	156.25	468.85
17.30	79.05	20.97	1.05	3.38	0.05	0.10	36.45	158.50	4.96	0.46	754.31	32.24	11.62	400.35	3847.47	2899.12	2820.07	2788.62	3695.84	3374.94	303.55	140.25	459.52
17.30	79.09	20.98	1.04	3.35	0.04	0.10	37.25	161.36	4.27	0.36	767.17	32.45	11.62	399.95	3865.51	2913.52	2834.28	2802.63	3711.39	3392.02	302.65	143.99	470.12
17.30	79.10	20.98	1.01	3.27	0.03	0.10	37.48	166.26	4.08	0.32	786.28	32.52	11.62	399.65	3845.50	2898.51	2819.69	2788.20	3692.05	3374.56	302.85	144.12	481.91
17.30	79.08	20.98	0.92	2.98	0.03	0.09	37.31	186.60	4.25	0.32	862.66	32.53	11.62	394.55	3643.78	2749.59	2675.59	2645.55	3491.52	3202.35	302.65	135.93	513.06
17.30	79.03	20.96	0.88	2.82	0.04	0.09	35.93	197.79	5.47	0.47	901.36	32.22	11.62	386.95	3340.82	2525.22	2458.30	2430.49	3191.92	2942.61	302.45	120.03	499.46
17.30	79.05	20.97	0.88	2.84	0.03	0.09	36.58	197.23	4.90	0.39	900.95	32.38	11.62	386.05	3292.65	2489.14	2423.25	2395.81	3145.19	2900.68	302.75	120.46	490.93
17.30	79.05	20.97	0.89	2.86	0.04	0.09	36.37	195.23	5.08	0.42	892.86	32.32	11.62	385.85	3284.50	2483.09	2417.39	2390.01	3137.17	2893.67	302.75	119.46	484.78
17.30	79.08	20.98	0.89	2.87	0.03	0.09	37.14	195.35	4.42	0.33	895.27	32.51	11.62	385.85	3292.17	2488.99	2423.16	2395.71	3144.26	2900.58	302.55	122.25	486.21
17.30	79.05	20.97	0.84	2.70	0.03	0.08	36.58	209.74	4.92	0.37	948.21	32.42	11.62	383.05	3143.74	2377.75	2315.10	2288.83	3000.36	2771.32	303.45	115.01	498.71
17.30	79.03	20.96	0.72	2.33	0.03	0.07	35.93	249.37	5.55	0.40	1096.22	32.36	11.62	378.25	2933.63	2220.95	2162.95	2138.29	2795.19	2589.34	303.85	105.39	553.84
17.30	79.02	20.96	0.67	2.17	0.03	0.07	35.65	271.42	5.82	0.41	1178.82	32.35	11.62	374.05	2798.25	2120.81	2066.00	2042.33	2661.06	2473.46	302.95	99.76	575.63
17.30	79.02	20.96	0.65	2.09	0.03	0.06	35.42	283.10	6.03	0.42	1222.35	32.33	11.62	370.65	2645.76	2006.55	1955.01	1932.55	2513.18	2340.69	303.35	93.72	568.05
17.30	79.02	20.96	0.63	2.04	0.02	0.06	35.61	291.96	5.88	0.38	1256.31	32.40	11.62	368.15	2568.13	1948.99	1899.25	1877.36	2436.56	2274.03	302.75	91.45	569.03
17.30	79.02	20.96	0.60	1.92	0.02	0.06	35.43	312.39	6.07	0.38	1333.02	32.41	11.62	364.75	2446.89	1858.52	1811.46	1790.51	2318.15	2169.04	302.35	86.68	580.59
17.30	79.02	20.96	0.58	1.88	0.02	0.06	35.29	319.74	6.20	0.38	1360.41	32.40	11.62	362.55	2385.51	1813.05	1767.43	1746.92	2257.48	2116.39	301.65	84.19	579.70
17.30	79.01	20.96	0.58	1.86	0.02	0.06	35.05	322.65	6.42	0.41	1370.79	32.34	11.62	360.45	2293.80	1744.07	1700.36	1680.60	2169.10	2036.15	301.85	80.39	562.73
17.30	79.02	20.96	0.57	1.84	0.02	0.06	35.16	327.39	6.33	0.39	1388.97	32.38	11.62	359.25	2249.66	1711.00	1668.24	1648.82	2126.29	1997.71	301.75	79.09	560.16
17.30	79.03	20.96	0.55	1.79	0.02	0.05	35.74	340.81	5.84	0.30	1441.18	32.57	11.62	357.95	2193.91	1669.04	1627.43	1608.46	2072.64	1948.88	301.85	78.41	568.82

007- Appendix G- Stack Loss Efficiency Data/results (page 5 of 46)

SUMS					AVERAGE	SUMS						
33890.97	66827.37	7695.54	51726.66	18410.62	6000.28	93586.30	13099.07	80487.2	269707.8	13099.1	1007.7	52.4
Energy Losses (kJ/kg of Dry Fuel)					Total							
Flue Gas Constituent					Loss	Total	Chemical	Sensible and	Total	Chem	Grams Produced	
CO	N_2	CH_4	H_2O Comb	H_2O Fuel MC	Rate	Loss	Loss 1	Latent Loss	Output	Loss 2	CO	HC
667.15	1949.01	122.10	1568.02	554.02	5426.12	0.00	0	0.00	0	0	0.00	0.00
730.61	1222.90	311.00	1661.58	594.65	4921.00	16009.07	3330	12679.53	48688	3330	230.27	18.02
569.01	1357.68	235.56	1684.69	599.81	4892.18	8719.47	1407	7312.09	26726	1407	98.13	7.47
266.29	1425.49	95.59	1696.05	598.15	4549.35	7041.53	550	6491.81	23740	550	39.90	2.63
182.08	1585.03	39.55	1681.19	590.68	4583.99	6364.13	302	6061.94	21246	302	24.51	0.98
204.90	1620.37	42.75	1671.52	587.41	4638.41	6004.58	315	5689.52	19740	315	25.74	0.99
204.09	1665.54	36.64	1667.34	585.70	4681.40	5708.91	289	5420.35	18543	289	24.17	0.80
219.83	1710.79	34.56	1657.69	582.23	4735.93	5197.86	275	4923.25	16629	275	23.45	0.68
195.63	1746.07	15.16	1650.80	579.05	4724.48	4298.92	189	4110.25	13797	189	17.31	0.25
249.35	1877.68	12.67	1631.64	572.24	4910.12	3730.88	196	3534.76	11380	196	18.46	0.17
253.85	1856.76	11.74	1626.70	570.47	4878.53	3203.47	172	3031.61	9855	172	16.25	0.14
308.47	1901.79	22.88	1616.70	567.39	4985.17	2759.09	181	2578.19	8248	181	16.65	0.23
407.22	1944.37	52.68	1604.89	564.38	5149.29	2270.28	200	2070.05	6498	200	17.53	0.42
721.24	2108.56	151.10	1577.76	558.56	5730.19	1881.36	283	1598.03	4648	283	23.15	0.89
1197.82	2181.31	327.82	1544.93	553.60	6430.59	1689.05	397	1292.09	3534	397	30.80	1.54
1418.19	2103.48	413.67	1526.38	550.22	6611.70	1612.58	443	1169.62	3238	443	33.89	1.81
1219.96	2150.08	320.28	1536.83	550.42	6391.68	1618.87	387	1232.16	3418	387	30.27	1.45
1164.91	2192.32	288.53	1539.62	550.22	6361.63	1432.23	324	1107.87	3045	324	25.69	1.16
1215.28	2282.20	282.54	1534.65	548.21	6511.88	1160.63	265	895.90	2384	265	21.23	0.90
1562.74	2190.74	423.61	1511.37	545.20	6853.14	1221.45	351	870.09	2323	351	27.32	1.35
1398.69	2158.51	350.51	1517.69	544.71	6581.49	1234.78	326	909.06	2496	326	25.74	1.18
1450.72	2133.94	376.81	1514.70	544.63	6625.04	1118.65	306	812.37	2239	306	24.03	1.14
1260.24	2144.81	290.76	1523.96	544.71	6372.94	1016.30	245	770.83	2155	245	19.72	0.83
1403.08	2170.30	334.90	1515.13	543.20	6580.32	1049.37	275	774.21	2122	275	21.96	0.96
1582.12	2344.05	359.66	1506.64	541.09	6992.79	983.96	271	712.57	1814	271	21.86	0.91
1658.38	2407.53	362.95	1502.54	539.74	7146.54	1005.59	283	723.01	1793	283	22.92	0.92
1719.07	2362.25	374.00	1497.09	538.20	7152.39	939.32	273	666.12	1672	273	22.18	0.88
1675.77	2358.55	342.00	1498.25	537.42	7072.48	796.14	226	570.36	1443	226	18.54	0.69
1729.58	2386.77	337.48	1495.31	536.20	7152.62	805.16	231	573.81	1433	231	19.14	0.68
1764.92	2376.53	343.12	1493.02	535.59	7177.07	740.58	216	524.28	1312	216	17.91	0.63
1827.49	2303.75	367.39	1487.92	534.66	7164.32	739.27	225	514.00	1313	225	18.55	0.68
1801.40	2290.15	348.96	1488.57	534.21	7102.54	986.07	297	689.11	1775	297	24.60	0.87
1660.88	2318.09	266.56	1495.47	533.65	6921.87	246.74	68	178.40	462	68	5.82	0.17

007- Appendix G- Stack Loss Efficiency Data/results (page 6 of 46)

SBI Laboratories, Inc.

Manufacturer: SBI
Model: Max Caddy
Date: 01-15-10
Run: 4
Control #: 245/20712-0000121
Test Duration: 320
Output Category: 3

Technicians: _____

Test Results in Accordance with CSA B415.1-10

	HHV Basis	LHV Basis
Overall Efficiency	74.2%	79.9%
Combustion Efficiency	96.4%	96.4%
Heat Transfer Efficiency	77%	82.9%

Output Rate (kJ/h)	50 437	47 845	**(Btu/h)**
Burn Rate (kg/h)	3.42	7.53	**(lb/h)**
Input (kJ/h)	67 985	64 491	**(Btu/h)**

Test Load Weight (dry kg)	18.23	40.18	**dry lb**
MC wet (%)	17.3		
MC dry (%)	20.92		
Particulate (g)	32.29		
CO (g)	1 008		
Test Duration (h)	5.33		

Emissions	**Particulate**	**CO**
g/MJ Output	0.12	3.75
g/kg Dry Fuel	1.77	55.27
g/h	6.05	188.94
lb/MM Btu Output	0.28	8.71

Air/Fuel Ratio (A/F)	16.45

VERSION: **2.4** **2010-04-15**

007- Appendix G- Stack Loss Efficiency Data/results (page 7 of 46)

VERSION: 2.4 2010-04-15

Manufacturer: SBI
Model: Max Caddy
Date: 2010-02-04
Run: 5
Control #: 3198245/20712-0000121
Test Duration: 440
Output Category: 2

Appliance Type: Non-Cat (Cat, Non-Cat, Pellet)

Temp. Units F (F or C)
Weight Units lb (kg or lb)

Default Fuel Values

	D. Fir	Oak
HHV (kJ/kg)	19 810	19 887
%C	48.73	50
%H	6.87	6.6
%O	43.9	42.9
%Ash	0.5	0.5

Fuel Data

	D. Fir	
HHV	19 887	kJ/kg
%C	50	
%H	6.6	
%O	42.9	
%Ash	0.5	

Wood Moisture (% wet): 17.26
Load Weight (lb wet): 45.62
Burn Rate (dry kg/h): 2.33
Total Particulate Emissions: 35.32 g

Note 1: For other fuels, use the heating value and fuel composition determined by analysis of fuel sample in accordance with Clause 9.2.

Note 2: In cases where the "Fuel Weight Remaining" is the same for three or more readings in a row, a "divide by zero error" will occur in the calculation sheet. In such cases, adjust the weight values by interpolation between the first occurence and the next reading showing a decrease in weight.

	Averages	0.44	5.86	13.98	187.02	81.40
					Temp. (ºF)	
Elapsed Time (min)	Fuel Weight Remaining (lb)	Flue Gas Composition (%) CO	CO_2	O_2	Flue Gas	Room Temp
0	45.62	0.48	4.49	15.24	299.5	80.2
10	40.02	0.78	10.92	9.05	303.4	82.6
20	37.72	0.44	10.44	9.75	264.4	80.6
30	35.07	0.67	10.03	10.16	257.9	80.6
40	32.72	0.51	10.03	9.93	252.5	80.8
50	30.47	0.44	9.85	10.16	247.5	80.2
60	28.27	0.46	9.56	10.52	240.6	82.8
70	26.07	0.41	9.80	10.29	239.0	82.8
80	23.97	0.38	9.83	10.38	235.4	80.2
90	21.97	0.25	9.31	11.38	228.4	81.5
100	20.27	0.20	8.67	11.75	217.2	80.1
110	18.67	0.23	8.74	11.54	215.4	79.9
120	17.02	0.23	8.83	11.37	213.8	82.9
130	15.67	0.27	8.84	11.19	214.3	80.6
140	14.37	0.23	8.52	11.63	206.8	80.8
150	13.27	0.22	7.63	11.87	193.5	81.1
160	12.32	0.55	6.06	13.48	175.8	81.1
170	11.27	0.84	5.29	13.74	317.3	82.4
180	10.12	0.26	7.69	11.98	192.7	81.9
190	9.27	0.34	6.78	12.88	177.1	82.4
200	8.42	0.27	6.33	12.98	185.2	81.0
210	7.92	0.83	3.79	14.85	149.9	82.6
220	7.37	0.41	4.33	15.13	168.8	82.6

007- Appendix G- Stack Loss Efficiency Data/results (page 8 of 46)

230	6.82	0.46	4.08	15.55	165.4	83.1
240	6.42	0.50	4.07	15.79	162.1	82.9
250	5.97	0.56	3.63	16.10	158.5	80.8
260	5.47	0.56	3.69	16.15	156.9	80.8
270	5.07	0.55	3.63	16.25	155.1	82.2
280	4.67	0.55	3.39	16.29	153.9	80.6
290	4.27	0.54	3.29	16.41	152.2	81.1
300	3.87	0.39	3.55	16.23	155.5	81.1
310	3.47	0.34	3.61	16.39	156.7	82.0
320	3.02	0.33	3.69	16.54	156.4	81.5
330	2.57	0.34	3.68	16.49	155.8	82.4
340	2.32	0.40	3.49	16.45	153.5	82.0
350	1.97	0.43	3.51	16.48	151.5	81.5
360	1.62	0.42	3.40	16.81	150.4	81.7
370	1.37	0.47	3.36	16.26	135.9	80.2
380	1.12	0.46	3.37	16.33	132.6	80.8
390	0.87	0.43	3.28	16.44	130.6	81.5
400	0.67	0.42	3.29	16.53	131.4	81.0
410	0.47	0.46	3.52	16.05	127.8	81.0
420	0.27	0.45	3.49	16.13	126.7	80.6
430	0.07	0.44	3.44	16.12	125.2	81.1
440	-0.03	0.48	3.51	16.25	125.2	81.5

007- Appendix G- Stack Loss Efficiency Data/results (page 9 of 46)

Manufacturer: SBI
Model: Max Caddy
Date: 02-04-10
Run: 5
Control #: 3245/20712-0000121
Test Duration: 440 min

	HHV	LHV
Eff	79.13%	85.23%
Comb Eff	95.37%	95.37%
HT Eff	82.97%	89.37%
Output	36 752	kJ/h
Burn Rate	2.34	kg/h
Grams CO	1 189	g
Input	46 444	kJ/h
MC wet	17.26	

Note: In the "Input data", "Calc. % O_2", "Fuel Properties", and "Mass Balance" columns, [e], [d], [g], [a], [b], [c], [h], [u], [w], [j], and [k] refer to their respective variables in Clauses 13.7.3 to 13.7.5.

Ultimate CO_2
$CO_{2\text{-ult}}$ 19.80
F_0
1.051

Overall Heating Efficiency:	79.13%	Air Fuel Ratio (A/F)			
Combustion Efficiency:	95.37%	Dry Molecular Weight (M_d)	29.52		
Heat Transfer Efficiency:	82.97%	Dry Moles Exhaust Gas (N_d):	557.89	%HC	Combustion Efficiency:
		Air Fuel Ratio (A/F)	15.96	1.32	Total Input (kJ):
					Total Output (kJ):
Heat Output:	34 863 Btu/h	36 752 kJ/h			Efficiency:
Heat Input:	44 057 Btu/h	46 444 kJ/h			Total CO (g):
Burn Duration:	7.33 h				
Burn Rate:	5.15 lb/h	2.335 kg/h			
Stack Temp:	184.5 Deg. F	84.7 Deg. C			

Elapsed Time	Weight Remaining (kg)	% CO [e]	% CO_2 [d]	Excess Air EA	Total O_2	Calc. % O_2 [g]	Flue Gas (°C)	Room Temp (°C)	Combust Eff %	Heat Transfer %	Net Eff %	Air Fuel Ratio	Wet Wt Now Wt	% Wet Consumed x	Dry Wt. Now Wt_{dry}	% Dry Comsumed y	Total Input	Carbon /12= [a]	Hydrogen /1= [b]	Oxygen /16= [c]	Calorific Value
	INPUT DATA			Oxygen Calculation			Input Data											Fuel Properties			
				2.71	20.58	14.50	86.12	27.45	93.7%	82.9%	77.7%	22.46	5.55	73.20	4.59	73.20	340720	4.17	6.60	2.68	19887.00
		0.44	5.86																		
0	20.70	0.48	4.49	298.4%	20.65	15.92	148.6	26.8	92.7%	72.2%	66.9%	24.1	20.70	0.00	17.13	0.00	0	4.17	6.60	2.68	19887.00
10	18.16	0.78	10.92	69.3%	20.27	8.96	150.8	28.1	94.5%	81.7%	77.2%	10.3	18.16	12.28	15.02	12.28	50394	4.17	6.60	2.68	19887.00
20	17.11	0.44	10.44	82.0%	20.31	9.65	129.1	27.0	96.8%	82.9%	80.3%	11.1	17.11	17.32	14.16	17.32	18478	4.17	6.60	2.68	19887.00
30	15.91	0.67	10.03	85.1%	20.33	9.96	125.5	27.0	94.9%	82.8%	78.6%	11.2	15.91	23.13	13.17	23.13	18664	4.17	6.60	2.68	19887.00
40	14.85	0.51	10.03	87.9%	20.33	10.05	122.5	27.1	96.1%	83.1%	79.9%	11.4	14.85	28.28	12.28	28.28	17171	4.17	6.60	2.68	19887.00
50	13.82	0.44	9.85	92.4%	20.35	10.28	119.7	26.8	96.6%	83.2%	80.4%	11.7	13.82	33.21	11.44	33.21	16611	4.17	6.60	2.68	19887.00
60	12.83	0.46	9.56	97.6%	20.36	10.57	115.9	28.2	96.4%	83.4%	80.4%	12.0	12.83	38.03	10.61	38.03	16425	4.17	6.60	2.68	19887.00
70	11.83	0.41	9.80	93.9%	20.35	10.35	115.0	28.2	96.8%	83.7%	81.0%	11.8	11.83	42.85	9.79	42.85	16051	4.17	6.60	2.68	19887.00
80	10.88	0.38	9.83	93.9%	20.35	10.33	113.0	26.8	97.1%	83.7%	81.3%	11.8	10.88	47.46	9.00	47.46	15305	4.17	6.60	2.68	19887.00
90	9.97	0.25	9.31	107.1%	20.39	10.96	109.1	27.5	98.1%	83.8%	82.2%	12.7	9.97	51.84	8.25	51.84	13812	4.17	6.60	2.68	19887.00
100	9.20	0.20	8.67	123.3%	20.43	11.66	102.9	26.7	98.4%	83.9%	82.6%	13.7	9.20	55.57	7.61	55.57	12318	4.17	6.60	2.68	19887.00
110	8.47	0.23	8.74	120.8%	20.42	11.57	101.9	26.6	98.2%	84.0%	82.5%	13.5	8.47	59.07	7.01	59.07	12132	4.17	6.60	2.68	19887.00
120	7.72	0.23	8.83	118.6%	20.42	11.47	101.0	28.3	98.2%	84.3%	82.7%	13.4	7.72	62.69	6.39	62.69	11199	4.17	6.60	2.68	19887.00
130	7.11	0.27	8.84	117.4%	20.42	11.44	101.3	27.0	97.8%	84.1%	82.3%	13.3	7.11	65.65	5.88	65.65	9892	4.17	6.60	2.68	19887.00
140	6.52	0.23	8.52	126.3%	20.44	11.80	97.1	27.1	98.1%	84.3%	82.7%	13.9	6.52	68.50	5.39	68.50	8959	4.17	6.60	2.68	19887.00
150	6.02	0.22	7.63	152.3%	20.49	12.75	89.7	27.3	98.1%	84.4%	82.7%	15.4	6.02	70.91	4.98	70.91	7652	4.17	6.60	2.68	19887.00
160	5.59	0.55	6.06	199.6%	20.56	14.23	79.9	27.3	93.5%	83.9%	78.5%	18.1	5.59	72.99	4.63	72.99	7466	4.17	6.60	2.68	19887.00
170	5.11	0.84	5.29	223.0%	20.59	14.88	158.5	28.0	89.0%	73.4%	65.3%	19.4	5.11	75.30	4.23	75.30	8212	4.17	6.60	2.68	19887.00
180	4.59	0.26	7.69	149.1%	20.48	12.66	89.3	27.7	97.6%	84.5%	82.5%	15.2	4.59	77.82	3.80	77.82	7466	4.17	6.60	2.68	19887.00
190	4.21	0.34	6.78	178.1%	20.53	13.58	80.6	28.0	96.4%	84.6%	81.6%	17.0	4.21	79.68	3.48	79.68	6346	4.17	6.60	2.68	19887.00
200	3.82	0.27	6.33	200.0%	20.56	14.10	85.1	27.2	97.1%	83.8%	81.4%	18.3	3.82	81.54	3.16	81.54	5039	4.17	6.60	2.68	19887.00
210	3.59	0.83	3.79	328.6%	20.67	16.47	65.5	28.1	85.8%	82.9%	71.1%	25.6	3.59	82.64	2.97	82.64	3920	4.17	6.60	2.68	19887.00
220	3.34	0.41	4.33	317.8%	20.67	16.13	76.0	28.1	93.6%	82.6%	77.3%	25.3	3.34	83.84	2.77	83.84	4106	4.17	6.60	2.68	19887.00
230	3.09	0.46	4.08	336.2%	20.68	16.37	74.1	28.4	92.4%	82.4%	76.1%	26.4	3.09	85.05	2.56	85.05	3546	4.17	6.60	2.68	19887.00
240	2.91	0.50	4.07	333.3%	20.68	16.36	72.3	28.3	91.7%	82.6%	75.8%	26.2	2.91	85.93	2.41	85.93	3173	4.17	6.60	2.68	19887.00
250	2.71	0.56	3.63	372.6%	20.70	16.79	70.3	27.1	89.8%	81.9%	73.5%	28.5	2.71	86.91	2.24	86.91	3546	4.17	6.60	2.68	19887.00
260	2.48	0.56	3.69	365.9%	20.70	16.73	69.4	27.1	89.9%	82.2%	73.9%	28.1	2.48	88.01	2.05	88.01	3360	4.17	6.60	2.68	19887.00
270	2.30	0.55	3.63	373.7%	20.70	16.79	68.4	27.9	89.9%	82.4%	74.1%	28.5	2.30	88.89	1.90	88.89	2986	4.17	6.60	2.68	19887.00
280	2.12	0.55	3.39	402.6%	20.71	17.05	67.7	27.0	89.3%	81.8%	73.1%	30.2	2.12	89.76	1.75	89.76	2986	4.17	6.60	2.68	19887.00
290	1.94	0.54	3.29	417.0%	20.72	17.16	66.8	27.3	89.3%	81.8%	73.1%	31.1	1.94	90.64	1.60	90.64	2986	4.17	6.60	2.68	19887.00
300	1.76	0.39	3.55	402.6%	20.71	16.97	68.6	27.3	92.8%	82.2%	76.3%	30.4	1.76	91.52	1.45	91.52	2986	4.17	6.60	2.68	19887.00
310	1.57	0.34	3.61	401.3%	20.71	16.93	69.3	27.8	93.9%	82.4%	77.3%	30.4	1.57	92.39	1.30	92.39	3173	4.17	6.60	2.68	19887.00
320	1.37	0.33	3.69	392.6%	20.71	16.85	69.1	27.5	94.2%	82.5%	77.7%	29.9	1.37	93.38	1.13	93.38	3360	4.17	6.60	2.68	19887.00

007- Appendix G- Stack Loss Efficiency Data/results (page 10 of 46)

Moisture Content M_{Cwb}: 17.26

95.37%
340 587 323 031 (Btu)
269 513 255 620 (Btu)
79.13%
1188.75

Moisture of Wood (wet basis): 17.26
Initial Dry Weight Wt_{do} (kg): 17.13
Moisture Content Dry 20.86

Dry kg : 17.13
CA: 50
HY: 6.6
OX: 42.9

Load Weight (kg): **20.70**

Fuel Heating	HHV	LHV		HHV	LHV
Value in kJ/kg - CV:	**19 887**	**18 464**	Btu/lb	**8555.6**	**7943.4**

17.26	79.20	21.01	1.52	4.94	0.04	0.15	38.09	120.66	3.48	0.31	615.62	32.55	11.59	359.27	2306.33	1749.27	1704.37	1684.78	2190.43	2040.61	300.60	4003.27	7644.88
Mw Moisture	Mass Balance (moles/100 mole dry flue gas)					kg Wood per 100 mole dfp	Moles per kg of Dry Wood						Moisture	Stack Temp	Heat Content Change - Ambient to Stack Temperature Flue Gas Constituent						Room Temp		
Fuel Burnt	[h]	[u]	[w]	[j]	[k]	Nk	CO_2	O_2	CO	HC	N_2	H_2O	Present	K	CO_2	O_2	CO	N_2	CH_4	H_2O	K	CO_2	O_2
17.26	79.11	20.98	1.20	3.88	0.04	0.12	37.50	133.00	4.01	0.37	660.70	32.43	11.59	421.76	4873.88	3658.61	3555.43	3516.50	4712.30	4253.91	299.93	182.78	486.60
17.26	79.34	21.05	2.83	9.15	0.10	0.28	38.76	31.79	2.77	0.35	281.62	32.47	11.59	423.93	4913.44	3685.56	3580.95	3541.89	4756.56	4284.23	301.26	190.44	117.18
17.26	79.47	21.08	2.62	8.56	0.05	0.26	40.01	37.00	1.69	0.18	304.51	32.80	11.59	402.26	4056.36	3057.50	2974.37	2941.15	3894.37	3559.68	300.15	162.28	113.12
17.26	79.34	21.05	2.59	8.38	0.08	0.26	38.96	38.69	2.60	0.31	308.18	32.54	11.59	398.65	3907.75	2947.77	2868.19	2836.04	3746.68	3432.78	300.15	152.25	114.05
17.26	79.41	21.06	2.54	8.28	0.06	0.25	39.63	39.71	2.02	0.23	313.79	32.71	11.59	395.65	3780.33	2853.43	2776.82	2745.61	3620.63	3323.57	300.26	149.83	113.31
17.26	79.43	21.07	2.48	8.09	0.05	0.25	39.90	41.64	1.78	0.19	321.78	32.78	11.59	392.87	3679.26	2779.00	2704.85	2674.35	3519.75	3237.58	299.93	146.81	115.72
17.26	79.41	21.06	2.42	7.88	0.05	0.24	39.76	43.98	1.91	0.21	330.23	32.75	11.59	389.04	3467.30	2620.26	2550.67	2521.84	3314.02	3053.14	301.37	137.85	115.23
17.26	79.44	21.07	2.46	8.03	0.04	0.24	40.03	42.27	1.67	0.17	324.47	32.82	11.59	388.15	3431.03	2593.34	2524.60	2496.03	3278.26	3021.96	301.37	137.34	109.61
17.26	79.46	21.08	2.46	8.04	0.04	0.24	40.17	42.22	1.55	0.16	324.67	32.85	11.59	386.15	3404.75	2575.40	2507.60	2479.13	3248.95	3001.77	299.93	136.76	108.74
17.26	79.48	21.08	2.30	7.55	0.02	0.23	40.70	47.90	1.09	0.08	347.49	33.00	11.59	382.26	3218.92	2436.51	2372.77	2345.75	3067.97	2840.50	300.65	131.02	116.70
17.26	79.47	21.08	2.13	7.01	0.01	0.21	40.88	54.99	0.94	0.05	374.75	33.07	11.59	376.04	2996.45	2271.56	2212.99	2187.61	2848.37	2649.48	299.87	122.51	124.90
17.26	79.46	21.08	2.16	7.09	0.01	0.21	40.74	53.92	1.07	0.07	370.35	33.03	11.59	375.04	2960.27	2244.68	2186.93	2161.82	2812.78	2618.33	299.76	120.59	121.04
17.26	79.47	21.08	2.18	7.16	0.01	0.22	40.75	52.95	1.06	0.07	366.69	33.03	11.59	374.15	2860.59	2168.73	2112.84	2088.60	2718.88	2529.60	301.43	116.56	114.83
17.26	79.45	21.07	2.19	7.19	0.02	0.22	40.54	52.47	1.24	0.09	364.37	32.98	11.59	374.43	2920.70	2214.79	2157.83	2133.05	2774.96	2583.50	300.15	118.41	116.22
17.26	79.45	21.07	2.10	6.91	0.01	0.21	40.71	56.39	1.10	0.07	379.60	33.03	11.59	370.26	2748.38	2085.95	2032.76	2009.32	2607.19	2433.90	300.26	111.88	117.63
17.26	79.40	21.06	1.89	6.20	0.01	0.19	40.64	67.91	1.17	0.06	422.95	33.04	11.59	362.87	2445.19	1858.77	1812.09	1791.05	2313.15	2169.91	300.43	99.38	126.23
17.26	79.16	21.00	1.60	5.17	0.06	0.16	38.07	89.36	3.45	0.36	497.27	32.45	11.59	353.04	2052.64	1563.74	1525.29	1507.40	1934.41	1826.73	300.43	78.13	139.73
17.26	78.99	20.95	1.49	4.74	0.10	0.15	35.57	100.05	5.65	0.65	531.19	31.86	11.59	431.65	5241.61	3925.39	3812.41	3771.15	5088.12	4560.65	301.15	186.46	392.72
17.26	79.39	21.06	1.91	6.28	0.02	0.19	40.42	66.56	1.37	0.09	417.25	32.98	11.59	362.43	2410.38	1832.31	1786.30	1765.55	2280.23	2139.02	300.87	97.42	121.95
17.26	79.30	21.03	1.72	5.61	0.03	0.17	39.72	79.57	1.99	0.16	464.61	32.84	11.59	353.76	2053.74	1564.08	1525.50	1507.64	1936.54	1826.95	301.15	81.58	124.45
17.26	79.30	21.04	1.59	5.21	0.02	0.16	40.06	89.21	1.71	0.10	501.92	32.96	11.59	358.26	2262.89	1721.95	1679.14	1659.54	2136.84	2010.83	300.37	90.66	153.62
17.26	78.91	20.93	1.13	3.55	0.09	0.11	33.67	146.32	7.37	0.83	701.08	31.51	11.59	338.65	1451.39	1109.01	1082.55	1069.69	1360.53	1296.75	301.26	48.87	162.28
17.26	79.13	20.99	1.15	3.71	0.03	0.11	37.99	141.53	3.60	0.29	694.17	32.58	11.59	349.15	1866.28	1422.72	1387.97	1371.65	1756.68	1662.35	301.26	70.89	201.36
17.26	79.09	20.98	1.10	3.55	0.04	0.11	37.30	149.66	4.21	0.37	723.11	32.43	11.59	347.26	1780.77	1358.02	1324.97	1309.36	1675.14	1586.93	301.54	66.43	203.24
17.26	79.07	20.97	1.11	3.56	0.05	0.11	36.92	148.39	4.54	0.42	717.34	32.33	11.59	345.43	1712.45	1306.49	1274.82	1259.78	1609.65	1526.91	301.43	63.23	193.87
17.26	79.02	20.96	1.02	3.25	0.05	0.10	35.82	165.66	5.53	0.53	779.71	32.10	11.59	343.43	1678.04	1281.13	1250.29	1235.49	1575.34	1497.60	300.26	60.10	212.23
17.26	79.02	20.96	1.03	3.30	0.05	0.10	35.90	162.73	5.45	0.53	768.86	32.11	11.59	342.54	1642.94	1254.58	1224.44	1209.93	1541.85	1466.66	300.26	58.98	204.16
17.26	79.03	20.96	1.02	3.25	0.05	0.10	35.91	166.17	5.44	0.52	781.86	32.13	11.59	341.54	1573.72	1201.78	1172.93	1159.03	1476.76	1404.96	301.04	56.52	199.69
17.26	79.01	20.96	0.96	3.06	0.05	0.10	35.56	178.83	5.77	0.55	828.80	32.07	11.59	340.87	1581.44	1208.09	1179.19	1165.19	1483.09	1412.49	300.15	56.24	216.05
17.26	79.01	20.96	0.93	2.97	0.05	0.09	35.50	185.18	5.83	0.55	852.63	32.08	11.59	339.93	1533.59	1171.71	1143.72	1130.14	1437.84	1370.02	300.43	54.45	216.98
17.26	79.09	20.98	0.95	3.09	0.03	0.09	37.45	179.02	4.11	0.31	834.43	32.55	11.59	341.76	1605.87	1226.44	1197.02	1182.83	1506.69	1433.82	300.43	60.15	219.56
17.26	79.12	20.99	0.95	3.10	0.02	0.09	38.06	178.52	3.58	0.23	834.10	32.70	11.59	342.43	1613.05	1231.60	1201.98	1187.75	1514.13	1439.74	300.93	61.39	219.86
17.26	79.13	20.99	0.97	3.16	0.02	0.10	38.24	174.67	3.42	0.21	820.02	32.74	11.59	342.26	1617.10	1234.81	1205.15	1190.87	1517.66	1443.54	300.65	61.84	215.68

007- Appendix G- Stack Loss Efficiency Data/results (page 11 of 46)

SUMS					AVERAGE	SUMS						
44485.82	40038.24	12395.58	67394.12	23994.81	4443.48	71074.04	15758.01	55316.0	269645.7	15758.0	1188.7	67.3
Energy Losses (kJ/kg of Dry Fuel)					Total							
Flue Gas Constituent					Loss	Total	Chemical	Sensible and	Total	Chem	Grams Produced	
CO	N_2	CH_4	H_2O Comb	H_2O Fuel MC	Rate	Loss	Loss 1	Latent Loss	Output	Loss 2	CO	HC
1148.62	2323.35	327.57	1564.05	558.87	6591.84	0.00	0	0.00	0	0	0.00	0.00
793.39	997.45	311.68	1566.75	559.22	4536.10	11494.51	2771	8723.60	38899	2771	196.43	14.12
482.16	895.61	164.57	1558.83	550.82	3927.39	3649.08	596	3053.50	14829	596	43.86	2.74
743.96	874.02	280.15	1542.41	549.35	4256.18	3994.52	953	3041.48	14670	953	68.39	4.71
575.90	861.55	203.05	1547.01	548.09	3998.73	3452.66	667	2785.63	13719	667	48.72	3.14
509.25	860.56	170.31	1547.65	547.09	3897.39	3255.42	563	2692.39	13356	563	41.69	2.55
546.25	832.78	183.75	1540.19	544.95	3901.00	3221.83	598	2623.51	13203	598	44.24	2.72
478.13	809.90	155.49	1542.14	544.59	3777.20	3048.68	508	2541.14	13003	508	37.85	2.25
443.31	804.90	139.86	1543.12	544.36	3721.05	2863.67	445	2418.26	12441	445	33.46	1.93
311.89	815.13	72.61	1544.87	542.49	3534.71	2454.87	265	2189.81	11357	265	21.25	0.90
268.98	819.80	43.26	1541.62	540.27	3461.36	2144.05	192	1952.02	10174	192	16.36	0.48
305.71	800.63	61.34	1538.71	539.91	3487.92	2127.77	222	1905.40	10004	222	18.31	0.67
302.59	765.88	61.35	1535.78	538.89	3435.87	1934.78	204	1731.21	9264	204	16.73	0.62
353.10	777.23	84.79	1535.11	539.51	3524.37	1753.08	216	1536.73	8139	216	17.25	0.76
313.23	762.74	61.29	1532.62	537.78	3437.16	1548.41	168	1380.78	7410	168	13.86	0.49
333.76	757.53	54.30	1524.62	534.72	3430.54	1320.05	148	1171.60	6332	148	12.63	0.37
982.95	749.59	317.24	1486.28	530.74	4284.67	1608.50	486	1122.63	5857	486	36.31	2.14
1620.05	2003.18	586.08	1545.99	562.42	6896.90	2848.07	901	1947.32	5364	901	65.31	4.33
389.17	736.68	81.25	1520.82	534.36	3481.65	1307.04	176	1131.44	6159	176	14.36	0.55
566.77	700.46	143.14	1504.16	530.74	3651.31	1165.12	225	939.66	5181	225	17.80	0.82
486.46	832.96	93.09	1515.37	532.87	3705.02	938.86	146	792.78	4101	146	12.12	0.42
2094.81	749.94	739.65	1426.17	524.60	5746.31	1132.54	557	575.69	2787	557	40.69	2.62
1022.87	952.15	261.44	1486.65	528.83	4524.20	934.13	264	670.09	3172	264	20.79	0.97
1195.75	946.81	328.11	1477.38	527.96	4745.67	846.24	271	575.61	2700	271	21.00	1.05
1289.42	903.68	372.31	1470.92	527.26	4820.70	769.14	264	505.04	2404	264	20.26	1.07
1570.62	963.33	474.94	1459.51	526.92	5267.66	939.32	363	575.94	2607	363	27.59	1.52
1548.55	930.27	469.17	1459.10	526.57	5196.79	877.91	340	538.32	2482	340	25.77	1.42
1546.32	906.20	463.39	1457.70	525.85	5155.68	774.19	301	473.48	2212	301	22.88	1.25
1639.48	965.71	487.52	1455.49	525.94	5346.43	802.84	318	484.58	2183	318	24.26	1.31
1655.76	963.59	485.96	1454.28	525.45	5356.46	804.34	320	483.86	2182	320	24.50	1.31
1169.33	986.99	274.72	1477.85	526.19	4714.77	707.99	216	491.95	2278	216	17.30	0.74
1018.70	990.70	207.34	1484.90	526.25	4509.16	719.43	195	524.56	2454	195	16.01	0.59
971.94	976.53	191.67	1486.62	526.30	4430.58	748.48	196	552.65	2611	196	16.18	0.58

007- Appendix G- Stack Loss Efficiency Data/results (page 12 of 46)

SBI Laboratories, Inc.

Manufacturer: SBI
Model: Max Caddy
Date: 02-04-10
Run: 5
Control #: 245/20712-0000121
Test Duration: 440
Output Category: 2

Technicians: _____

Test Results in Accordance with CSA B415.1-10

	HHV Basis	LHV Basis
Overall Efficiency	79.1%	85.2%
Combustion Efficiency	95.4%	95.4%
Heat Transfer Efficiency	83%	89.4%

Output Rate (kJ/h)	36 752	34 863	**(Btu/h)**
Burn Rate (kg/h)	2.34	5.15	**(lb/h)**
Input (kJ/h)	46 444	44 057	**(Btu/h)**

Test Load Weight (dry kg)	17.13	37.75	**dry lb**
MC wet (%)	17.26		
MC dry (%)	20.86		
Particulate (g)	35.32		
CO (g)	1 189		
Test Duration (h)	7.33		

Emissions	**Particulate**	**CO**
g/MJ Output	0.13	4.41
g/kg Dry Fuel	2.06	69.41
g/h	4.82	162.10
lb/MM Btu Output	0.30	10.25

Air/Fuel Ratio (A/F)	15.96

VERSION: **2.4** **2010-04-15**

007- Appendix G- Stack Loss Efficiency Data/results (page 13 of 46)

VERSION: 2.4 2010-04-15

Manufacturer: SBI
Model: Max Caddy
Date: 2010-02-05
Run: 6
Control #: 3198245/20712-0000121
Test Duration: 490
Output Category: 2

Appliance Type: Non-Cat (Cat, Non-Cat, Pellet)

Temp. Units F (F or C)
Weight Units lb (kg or lb)

Default Fuel Values

	D. Fir	Oak
HHV (kJ/kg)	19 810	19 887
%C	48.73	50
%H	6.87	6.6
%O	43.9	42.9
%Ash	0.5	0.5

Fuel Data

	D. Fir	
HHV	19 887	kJ/kg
%C	50	
%H	6.6	
%O	42.9	
%Ash	0.5	

Wood Moisture (% wet): 17.84
Load Weight (lb wet): 46.66
Burn Rate (dry kg/h): 2.13
Total Particulate Emissions: 39.92 g

Note 1: For other fuels, use the heating value and fuel composition determined by analysis of fuel sample in accordance with Clause 9.2.

Note 2: In cases where the "Fuel Weight Remaining" is the same for three or more readings in a row, a "divide by zero error" will occur in the calculation sheet. In such cases, adjust the weight values by interpolation between the first occurence and the next reading showing a decrease in weight.

	Averages	0.42	5.61	14.07	178.04	80.21
					Temp. (ºF)	
Elapsed Time (min)	Fuel Weight Remaining (lb)	Flue Gas Composition (%) CO	CO_2	O_2	Flue Gas	Room Temp
0	46.66	0.59	4.18	15.47	310.5	81.3
10	41.22	0.77	10.06	5.10	296.4	82.9
20	39.17	0.24	8.77	11.48	248.4	82.6
30	36.97	0.27	8.97	11.31	243.0	82.0
40	34.82	0.31	8.67	11.70	234.7	81.3
50	32.72	0.41	8.64	11.39	233.6	80.8
60	30.77	0.38	8.22	11.86	226.6	81.7
70	28.67	0.38	9.02	11.01	233.6	82.0
80	26.67	0.39	8.83	11.31	227.5	81.7
90	24.77	0.33	8.73	11.26	226.8	80.6
100	23.12	0.23	8.13	12.22	215.8	80.4
110	21.52	0.23	8.31	11.97	212.9	81.7
120	19.97	0.22	8.30	12.05	208.6	81.3
130	18.47	0.31	8.35	11.86	210.2	81.7
140	17.07	0.28	7.49	12.56	199.2	81.1
150	15.72	0.45	8.48	11.20	205.9	80.6
160	14.27	0.34	9.29	10.80	215.2	81.1
170	13.02	0.22	8.21	11.40	207.7	82.4
180	11.97	0.29	7.14	12.89	192.9	81.3
190	10.87	0.41	7.00	12.86	186.6	82.8
200	10.12	0.58	5.60	12.66	169.3	81.9
210	9.27	0.66	4.58	13.77	165.4	81.1
220	8.62	0.35	5.15	14.41	179.6	80.8

007- Appendix G- Stack Loss Efficiency Data/results (page 14 of 46)

230	8.02	0.45	4.51	15.00	178.9	82.6
240	7.22	0.33	5.17	14.81	192.9	80.8
250	6.47	0.28	5.15	14.70	198.1	81.1
260	5.82	0.30	4.56	14.92	183.0	79.9
270	5.27	0.31	4.38	15.15	178.0	81.7
280	4.77	0.27	4.55	14.95	178.3	83.8
290	4.32	0.35	3.93	15.26	163.8	80.8
300	3.92	0.46	3.76	15.69	154.9	81.0
310	3.57	0.51	3.83	15.86	146.8	80.4
320	3.22	0.47	3.82	15.92	139.6	78.8
330	2.97	0.46	3.84	15.92	132.8	79.2
340	2.77	0.49	3.85	15.94	133.5	79.0
350	2.52	0.53	3.60	16.00	131.5	78.3
360	2.17	0.53	3.50	16.06	128.3	78.1
370	2.07	0.56	3.58	16.07	130.3	77.7
380	1.92	0.54	3.50	16.00	127.4	78.8
390	1.67	0.53	3.53	16.13	127.6	76.5
400	1.42	0.52	3.22	16.29	125.8	77.9
410	1.27	0.51	3.25	16.50	126.7	77.7
420	1.07	0.51	3.21	16.41	123.6	77.4
430	0.87	0.50	3.27	16.50	124.3	78.1
440	0.72	0.50	3.20	16.57	124.7	77.9
450	0.52	0.47	3.12	16.65	123.1	77.4
460	0.37	0.44	2.95	16.76	121.1	77.4
470	0.22	0.44	2.98	16.81	118.9	77.9
480	0.12	0.44	2.99	16.92	118.9	77.5
490	-0.03	0.44	2.92	16.96	118.6	77.5

007- Appendix G- Stack Loss Efficiency Data/results (page 15 of 46)

Manufacturer: SBI
Model: Max Caddy
Date: 02-05-10
Run: 6
Control #: 3245/20712-0000121
Test Duration: 490 min

	HHV	LHV
Eff	79.53%	85.66%
Comb Eff	95.82%	95.82%
HT Eff	83.01%	89.40%
Output	33 687	kJ/h
Burn Rate	2.13	kg/h
Grams CO	1 104	g
Input	42 356	kJ/h
MC wet	17.84	

Note: In the "Input data", "Calc. % O_2", "Fuel Properties", and "Mass Balance" columns, [e], [d], [g], [a], [b], [c], [h], [u], [w], [j], and [k] refer to their respective variables in Clauses 13.7.3 to 13.7.5.

Ultimate CO_2
$CO_{2\text{-ult}}$ 19.80
F_0
1.051

Overall Heating Efficiency:	79.53%	Air Fuel Ratio (A/F)		
Combustion Efficiency:	95.82%	Dry Molecular Weight (M_d)	29.49	
Heat Transfer Efficiency:	83.01%	Dry Moles Exhaust Gas (N_d):	578.91	%HC
		Air Fuel Ratio (A/F)	16.56	1.32

Heat Output:	31 956	Btu/h	33 687	kJ/h
Heat Input:	40 180	Btu/h	42 356	kJ/h
Burn Duration:	8.17	h		
Burn Rate:	4.69	lb/h	2.130	kg/h
Stack Temp:	175.3	Deg. F	79.6	Deg. C

Combustion Efficiency:
Total Input (kJ):
Total Output (kJ):
Efficiency:
Total CO (g):

Averages	0.42	5.61	2.77	20.59	14.78	81.13	26.78	93.8%	83.2%	78.0%	22.86	5.55	73.78	4.56	73.77	346296	4.17	6.60	2.68	19887.00
INPUT DATA			Oxygen Calculation			Input Data		Combust	Heat	Net	Air	Wet Wt	% Wet	Dry Wt.	% Dry		Fuel Properties			
Elapsed Time	Weight Remaining (kg)	% CO [e]	% CO_2 [d]	Excess Air EA	Total O_2	Calc. % O_2 [g]	Flue Gas (°C)	Room Temp (°C)	Eff %	Transfer %	Eff %	Fuel Ratio	Now Wt	Consumed x	Now Wt_{dn}	Comsumed y	Total Input	Carbon /12= [a]	Hydrogen /1= [b]	Oxygen /16= [c]	Calorific Value
0	21.17	0.59	4.18	315.1%	20.67	16.19	154.7	27.4	90.4%	69.9%	63.2%	25.0	21.17	0.00	17.39	0.00	0	4.17	6.60	2.68	19887.00
10	18.70	0.77	10.06	82.8%	20.32	9.87	146.9	28.3	94.2%	81.3%	76.5%	11.1	18.70	11.66	15.37	11.66	47928	4.17	6.60	2.68	19887.00
20	17.77	0.24	8.77	119.8%	20.42	11.53	120.2	28.1	98.1%	82.6%	81.0%	13.5	17.77	16.05	14.60	16.05	15753	4.17	6.60	2.68	19887.00
30	16.77	0.27	8.97	114.3%	20.41	11.30	117.2	27.8	97.8%	82.9%	81.1%	13.1	16.77	20.77	13.78	20.77	16124	4.17	6.60	2.68	19887.00
40	15.80	0.31	8.67	120.5%	20.42	11.60	112.6	27.4	97.4%	83.0%	80.8%	13.5	15.80	25.38	12.98	25.38	15753	4.17	6.60	2.68	19887.00
50	14.85	0.41	8.64	118.8%	20.42	11.58	112.0	27.1	96.5%	83.0%	80.0%	13.3	14.85	29.88	12.20	29.88	15012	4.17	6.60	2.68	19887.00
60	13.96	0.38	8.22	130.3%	20.45	12.04	108.1	27.6	96.6%	83.0%	80.2%	14.0	13.96	34.05	11.47	34.05	15012	4.17	6.60	2.68	19887.00
70	13.01	0.38	9.02	110.7%	20.40	11.19	112.0	27.8	96.9%	83.3%	80.7%	12.9	13.01	38.56	10.69	38.56	15197	4.17	6.60	2.68	19887.00
80	12.10	0.39	8.83	114.8%	20.41	11.39	108.6	27.6	96.7%	83.4%	80.7%	13.1	12.10	42.84	9.94	42.84	14456	4.17	6.60	2.68	19887.00
90	11.24	0.33	8.73	118.6%	20.42	11.52	108.2	27.0	97.2%	83.4%	81.0%	13.4	11.24	46.91	9.23	46.91	13159	4.17	6.60	2.68	19887.00
100	10.49	0.23	8.13	136.9%	20.46	12.21	102.1	26.9	98.1%	83.5%	81.9%	14.5	10.49	50.45	8.62	50.45	12047	4.17	6.60	2.68	19887.00
110	9.76	0.23	8.31	131.9%	20.45	12.02	100.5	27.6	98.1%	83.8%	82.2%	14.2	9.76	53.88	8.02	53.88	11676	4.17	6.60	2.68	19887.00
120	9.06	0.22	8.30	132.4%	20.45	12.04	98.1	27.4	98.2%	84.0%	82.5%	14.2	9.06	57.20	7.44	57.20	11305	4.17	6.60	2.68	19887.00
130	8.38	0.31	8.35	128.7%	20.44	11.94	99.0	27.6	97.3%	83.9%	81.7%	14.0	8.38	60.42	6.89	60.42	10749	4.17	6.60	2.68	19887.00
140	7.75	0.28	7.49	154.9%	20.49	12.86	92.9	27.3	97.4%	83.9%	81.7%	15.6	7.75	63.42	6.36	63.42	10193	4.17	6.60	2.68	19887.00
150	7.13	0.45	8.48	121.8%	20.43	11.72	96.6	27.0	96.0%	84.1%	80.7%	13.5	7.13	66.31	5.86	66.31	10379	4.17	6.60	2.68	19887.00
160	6.47	0.34	9.29	105.6%	20.39	10.93	101.8	27.3	97.3%	84.2%	81.9%	12.6	6.47	69.42	5.32	69.42	10008	4.17	6.60	2.68	19887.00
170	5.91	0.22	8.21	134.9%	20.46	12.14	97.6	28.0	98.2%	84.0%	82.5%	14.4	5.91	72.10	4.85	72.10	8525	4.17	6.60	2.68	19887.00
180	5.43	0.29	7.14	166.5%	20.51	13.23	89.4	27.4	97.2%	83.9%	81.5%	16.3	5.43	74.35	4.46	74.35	7969	4.17	6.60	2.68	19887.00
190	4.93	0.41	7.00	167.2%	20.51	13.31	85.9	28.2	95.8%	84.2%	80.6%	16.3	4.93	76.70	4.05	76.70	6857	4.17	6.60	2.68	19887.00
200	4.59	0.58	5.60	220.4%	20.58	14.69	76.3	27.7	92.7%	83.8%	77.6%	19.4	4.59	78.31	3.77	78.31	5931	4.17	6.60	2.68	19887.00
210	4.21	0.66	4.58	277.9%	20.64	15.73	74.1	27.3	90.1%	82.7%	74.6%	22.7	4.21	80.13	3.46	80.13	5560	4.17	6.60	2.68	19887.00
220	3.91	0.35	5.15	260.0%	20.62	15.30	82.0	27.1	95.3%	82.7%	78.9%	21.9	3.91	81.53	3.21	81.53	4633	4.17	6.60	2.68	19887.00
230	3.64	0.45	4.51	299.2%	20.66	15.92	81.6	28.1	93.2%	81.9%	76.3%	24.2	3.64	82.81	2.99	82.81	5189	4.17	6.60	2.68	19887.00
240	3.28	0.33	5.17	260.0%	20.62	15.29	89.4	27.1	95.7%	81.8%	78.3%	21.9	3.28	84.53	2.69	84.53	5745	4.17	6.60	2.68	19887.00
250	2.94	0.28	5.15	264.7%	20.63	15.34	92.3	27.3	96.4%	81.5%	78.5%	22.2	2.94	86.13	2.41	86.13	5189	4.17	6.60	2.68	19887.00
260	2.64	0.30	4.56	307.5%	20.66	15.95	83.9	26.6	95.6%	81.6%	78.0%	24.8	2.64	87.53	2.17	87.53	4448	4.17	6.60	2.68	19887.00
270	2.39	0.31	4.38	322.2%	20.67	16.14	81.1	27.6	95.3%	81.8%	78.0%	25.7	2.39	88.71	1.96	88.71	3892	4.17	6.60	2.68	19887.00
280	2.16	0.27	4.55	310.8%	20.66	15.98	81.3	28.8	96.1%	82.3%	79.1%	25.0	2.16	89.78	1.78	89.78	3521	4.17	6.60	2.68	19887.00
290	1.96	0.35	3.93	362.7%	20.69	16.59	73.2	27.1	94.1%	82.1%	77.3%	28.1	1.96	90.74	1.61	90.74	3151	4.17	6.60	2.68	19887.00
300	1.78	0.46	3.76	369.2%	20.70	16.71	68.3	27.2	91.8%	82.5%	75.7%	28.4	1.78	91.60	1.46	91.60	2780	4.17	6.60	2.68	19887.00
310	1.62	0.51	3.83	356.3%	20.69	16.61	63.8	26.9	91.1%	83.2%	75.8%	27.5	1.62	92.35	1.33	92.35	2595	4.17	6.60	2.68	19887.00
320	1.46	0.47	3.82	361.6%	20.69	16.64	59.8	26.0	91.7%	83.8%	76.9%	27.9	1.46	93.10	1.20	93.10	2224	4.17	6.60	2.68	19887.00

007- Appendix G- Stack Loss Efficiency Data/results (page 16 of 46)

Moisture Content M_{Cwb}: 17.84

95.82%
345 910 328 079 (Btu)
275 109 260 927 (Btu)
79.53%
1104.37

Moisture of Wood (wet basis): 17.84
Initial Dry Weight Wt_{do} (kg): 17.39
Moisture Content Dry 21.71

Dry kg : 17.39
CA: 50
HY: 6.6
OX: 42.9

Load Weight (kg):	**21.17**		
Fuel Heating	**HHV**	**LHV**	
Value in kJ/kg - CV:	**19 887**	**18 464**	Btu/lb

HHV	**LHV**
8555.6	**7943.4**

17.84	**79.20**	**21.01**	**1.45**	**4.73**	**0.04**	**0.14**	**38.14**	**123.52**	**3.44**	**0.30**	**626.53**	**32.57**	**12.06**	**354.28**	**2131.49**	**1618.84**	**1577.83**	**1559.58**	**2019.61**	**1889.27**	**299.93**	**4137.10**	**8078.39**
Mw Moisture	**Mass Balance (moles/100 mole dry flue gas)**					**kg Wood per 100 mole dfp**	**Moles per kg of Dry Wood**						**Moisture**	**Stack Temp**	**Heat Content Change - Ambient to Stack Temperature Flue Gas Constituent**						**Room Temp**		
Fuel Burnt	**[h]**	**[u]**	**[w]**	**[j]**	**[k]**	**Nk**	**CO_2**	**O_2**	**CO**	**HC**	**N_2**	**H_2O**	**Present**	**K**	**CO_2**	**O_2**	**CO**	**N_2**	**CH_4**	**H_2O**	**K**	**CO_2**	**O_2**
17.84	79.04	20.97	1.16	3.71	0.06	0.12	36.25	140.40	5.12	0.51	685.37	32.14	12.06	427.87	5106.32	3827.62	3718.33	3677.91	4949.00	4448.39	300.54	185.08	537.39
17.84	79.30	21.03	2.62	8.46	0.10	0.26	38.56	37.84	2.95	0.37	303.94	32.44	12.06	420.04	4744.59	3561.73	3461.32	3423.42	4586.94	4141.33	301.43	182.95	134.78
17.84	79.46	21.08	2.17	7.12	0.02	0.22	40.69	53.50	1.11	0.08	368.63	33.02	12.06	393.37	3648.72	2754.85	2681.08	2650.90	3492.92	3209.03	301.26	148.46	147.39
17.84	79.46	21.08	2.22	7.29	0.02	0.22	40.56	51.12	1.22	0.09	359.28	32.98	12.06	390.37	3538.77	2673.75	2602.62	2573.23	3383.45	3115.28	300.93	143.53	136.67
17.84	79.42	21.07	2.16	7.08	0.03	0.22	40.31	53.93	1.44	0.12	369.28	32.92	12.06	385.76	3365.54	2545.62	2478.57	2450.44	3211.80	2967.01	300.54	135.67	137.29
17.84	79.37	21.05	2.18	7.12	0.04	0.22	39.80	53.32	1.89	0.19	365.64	32.79	12.06	385.15	3351.28	2535.32	2468.67	2440.62	3197.13	2955.19	300.26	133.38	135.18
17.84	79.36	21.05	2.07	6.77	0.04	0.21	39.86	58.36	1.84	0.17	384.85	32.82	12.06	381.26	3174.06	2403.01	2340.27	2313.59	3024.19	2801.62	300.76	126.52	140.25
17.84	79.41	21.06	2.26	7.40	0.04	0.23	40.03	49.65	1.69	0.16	352.38	32.84	12.06	385.15	3325.78	2515.66	2449.44	2421.63	3173.59	2932.14	300.93	133.12	124.91
17.84	79.39	21.06	2.22	7.26	0.04	0.22	39.94	51.50	1.76	0.17	359.12	32.82	12.06	381.76	3194.36	2418.12	2354.92	2328.09	3044.11	2819.14	300.76	127.58	124.53
17.84	79.42	21.07	2.18	7.14	0.03	0.22	40.22	53.10	1.52	0.13	365.89	32.90	12.06	381.37	3201.95	2424.39	2361.15	2334.22	3050.19	2826.64	300.15	128.79	128.72
17.84	79.43	21.07	2.01	6.60	0.01	0.20	40.66	61.08	1.15	0.07	397.20	33.03	12.06	375.26	2958.63	2243.19	2185.42	2160.34	2811.76	2616.50	300.04	120.29	137.02
17.84	79.44	21.07	2.05	6.75	0.01	0.20	40.68	58.86	1.13	0.07	388.88	33.03	12.06	373.65	2865.92	2173.32	2117.45	2093.13	2722.73	2535.15	300.76	116.59	127.93
17.84	79.44	21.07	2.05	6.73	0.01	0.20	40.73	59.09	1.08	0.06	389.87	33.04	12.06	371.26	2778.05	2107.88	2053.99	2030.33	2636.62	2459.27	300.54	113.16	124.56
17.84	79.40	21.06	2.08	6.83	0.03	0.21	40.26	57.55	1.49	0.12	382.82	32.92	12.06	372.15	2805.38	2128.11	2073.57	2049.72	2663.70	2482.68	300.76	112.94	122.48
17.84	79.37	21.05	1.87	6.13	0.02	0.19	40.26	69.15	1.51	0.11	426.65	32.95	12.06	366.04	2572.20	1953.97	1904.57	1882.52	2436.28	2280.54	300.43	103.57	135.12
17.84	79.35	21.05	2.15	7.02	0.05	0.21	39.56	54.69	2.10	0.22	370.18	32.73	12.06	369.76	2732.49	2074.17	2021.35	1998.03	2591.52	2420.26	300.15	108.10	113.43
17.84	79.44	21.07	2.32	7.59	0.03	0.23	40.27	47.36	1.47	0.14	344.33	32.89	12.06	374.93	2930.28	2221.67	2164.45	2139.61	2784.88	2591.39	300.43	117.99	105.22
17.84	79.43	21.07	2.03	6.66	0.01	0.20	40.72	60.20	1.09	0.06	394.01	33.04	12.06	370.76	2734.51	2074.80	2021.74	1998.46	2595.42	2420.65	301.15	111.36	124.89
17.84	79.34	21.05	1.79	5.86	0.02	0.18	40.13	74.35	1.63	0.12	445.93	32.93	12.06	362.54	2427.59	1845.48	1799.15	1778.26	2296.31	2154.42	300.54	97.42	137.21
17.84	79.28	21.03	1.79	5.82	0.04	0.18	39.36	74.83	2.31	0.21	445.76	32.74	12.06	359.04	2255.69	1715.81	1672.98	1653.49	2131.50	2003.41	301.37	88.78	128.40
17.84	79.13	20.99	1.50	4.82	0.06	0.15	37.58	98.61	3.89	0.40	530.98	32.36	12.06	349.43	1892.18	1442.51	1407.28	1390.72	1780.99	1685.48	300.87	71.11	142.25
17.84	79.03	20.96	1.27	4.07	0.07	0.13	36.12	124.04	5.20	0.55	623.25	32.06	12.06	347.26	1823.29	1390.79	1357.02	1341.02	1714.39	1625.35	300.43	65.85	172.51
17.84	79.20	21.01	1.33	4.32	0.03	0.13	39.03	115.93	2.65	0.20	600.18	32.77	12.06	355.15	2143.05	1631.92	1591.62	1572.99	2021.15	1906.12	300.26	83.63	189.19
17.84	79.12	20.99	1.20	3.88	0.04	0.12	37.78	133.35	3.77	0.33	662.71	32.50	12.06	354.76	2089.30	1590.77	1551.44	1533.29	1970.92	1857.98	301.26	78.93	212.12
17.84	79.21	21.01	1.33	4.33	0.02	0.13	39.20	115.92	2.50	0.18	600.56	32.81	12.06	362.54	2438.21	1853.67	1807.17	1786.17	2306.11	2164.03	300.26	95.57	214.87
17.84	79.23	21.02	1.31	4.28	0.02	0.13	39.60	117.94	2.15	0.12	609.25	32.92	12.06	365.43	2547.67	1935.59	1886.72	1864.86	2412.47	2259.18	300.43	100.89	228.28
17.84	79.19	21.01	1.17	3.83	0.02	0.12	39.15	136.94	2.58	0.15	679.83	32.86	12.06	357.04	2237.48	1703.30	1661.12	1641.70	2111.34	1989.31	299.76	87.59	233.24
17.84	79.17	21.00	1.13	3.69	0.02	0.11	38.95	143.49	2.76	0.17	704.08	32.83	12.06	354.26	2088.52	1590.53	1551.29	1533.13	1969.42	1857.83	300.76	81.35	228.22
17.84	79.20	21.01	1.16	3.80	0.01	0.12	39.42	138.43	2.34	0.12	686.18	32.93	12.06	354.43	2050.50	1561.12	1522.49	1504.69	1934.57	1823.30	301.93	80.83	216.11
17.84	79.13	20.99	1.03	3.36	0.02	0.10	38.24	161.40	3.41	0.23	769.90	32.70	12.06	346.37	1794.47	1369.12	1335.96	1320.19	1686.59	1600.14	300.26	68.61	220.98
17.84	79.07	20.97	1.02	3.29	0.04	0.10	36.96	164.25	4.52	0.39	777.34	32.39	12.06	341.43	1594.85	1218.12	1188.93	1174.83	1496.12	1424.14	300.37	58.95	200.07
17.84	79.05	20.97	1.05	3.38	0.05	0.10	36.56	158.51	4.87	0.45	754.60	32.27	12.06	336.93	1430.40	1093.69	1067.77	1055.04	1339.29	1279.10	300.04	52.29	173.36
17.84	79.07	20.97	1.04	3.35	0.04	0.10	36.93	160.87	4.54	0.40	764.49	32.37	12.06	332.93	1307.37	1000.71	977.25	965.55	1221.71	1170.75	299.15	48.29	160.98

007- Appendix G- Stack Loss Efficiency Data/results (page 17 of 46)

SUMS					AVERAGE	SUMS						
48914.68	42019.64	13348.02	74683.52	27660.06	4376.83	70713.97	14386.90	56327.1	275581.8	14474.1	1104.4	58.0
Energy Losses (kJ/kg of Dry Fuel)					Total							
Flue Gas Constituent					Loss	Total	Chemical	Sensible and	Total	Chem	Grams Produced	
CO	N_2	CH_4	H_2O Comb	H_2O Fuel MC	Rate	Loss	Loss 1	Latent Loss	Output	Loss 2	CO	HC
1466.63	2520.74	459.89	1556.05	584.07	7309.86	0.00	0	0.00	0	0	0.00	0.00
845.44	1040.53	326.58	1560.50	580.37	4671.15	11257.47	2796	8461.56	36670	2796	199.16	14.07
318.08	977.21	67.32	1557.59	569.12	3785.17	2998.43	303	2695.70	12755	303	24.70	0.95
348.68	924.52	84.53	1552.68	567.99	3758.61	3047.44	348	2699.03	13077	348	27.72	1.23
411.48	904.90	108.90	1545.23	566.20	3809.68	3017.84	409	2608.76	12736	409	31.97	1.54
539.14	892.39	167.32	1538.70	566.06	3972.18	2998.49	529	2469.17	12014	529	39.92	2.26
525.79	890.40	154.21	1535.04	564.21	3936.41	2971.49	510	2461.83	12041	510	38.95	2.09
481.32	853.33	146.47	1540.13	565.78	3845.08	2938.38	476	2462.17	12259	476	36.08	2.00
503.37	836.06	153.85	1535.65	564.42	3845.45	2795.31	474	2320.98	11661	474	35.90	2.00
433.85	854.06	120.23	1539.42	564.51	3769.57	2494.24	364	2130.27	10665	364	28.17	1.43
328.01	858.08	61.23	1538.66	561.97	3605.27	2183.94	234	1949.79	9863	234	19.51	0.66
321.02	813.97	61.26	1535.97	560.99	3537.73	2077.09	223	1854.15	9599	223	18.51	0.64
307.77	791.57	54.98	1534.11	560.08	3486.24	1981.87	205	1777.01	9324	205	17.19	0.56
426.06	784.68	110.53	1529.11	560.36	3646.15	1970.84	288	1682.65	8779	288	22.62	1.07
428.83	803.18	95.41	1524.02	557.92	3648.03	1869.86	267	1602.76	8324	267	21.60	0.88
598.35	739.63	192.37	1518.55	559.61	3830.02	1998.84	410	1588.68	8380	410	30.68	1.80
420.22	736.73	122.32	1531.46	561.67	3595.61	1809.49	271	1538.25	8199	271	20.77	1.10
311.02	787.41	54.90	1532.85	559.61	3482.04	1492.73	156	1336.88	7033	156	13.10	0.42
464.19	792.98	104.05	1518.97	556.40	3671.21	1471.18	226	1244.75	6498	226	18.29	0.75
656.22	737.06	190.15	1505.12	554.58	3860.31	1331.10	290	1040.75	5526	290	22.26	1.18
1106.94	738.45	360.26	1477.29	550.74	4447.05	1326.21	436	890.50	4605	436	32.50	1.93
1480.00	835.79	492.83	1461.79	550.02	5058.80	1414.35	549	865.02	4146	549	40.75	2.47
754.79	944.07	176.42	1503.34	553.40	4204.86	979.67	216	763.79	3654	216	17.30	0.74
1072.51	1016.13	295.26	1489.56	552.82	4717.33	1230.96	355	875.74	3958	355	27.54	1.38
712.57	1072.71	157.18	1513.79	556.52	4323.21	1248.98	250	999.13	4496	250	20.24	0.81
613.35	1136.16	109.46	1521.86	557.66	4267.67	1113.62	187	926.14	4076	187	15.73	0.51
733.12	1116.08	136.78	1510.16	554.41	4371.38	977.73	194	784.19	3470	194	16.13	0.55
784.42	1079.44	150.76	1504.40	552.82	4381.41	857.48	182	675.36	3035	182	15.11	0.53
665.54	1032.49	104.27	1508.04	552.41	4159.68	736.55	136	600.91	2785	136	11.60	0.33
968.23	1016.41	208.63	1490.02	549.71	4522.60	716.52	186	530.85	2434	186	15.11	0.59
1285.11	913.24	348.01	1470.07	547.59	4823.05	674.22	227	446.76	2106	227	17.70	0.87
1382.84	796.14	400.52	1460.03	545.84	4811.03	627.70	232	395.78	1967	232	17.78	0.94
1290.40	738.16	355.52	1461.09	544.53	4598.96	514.32	184	330.80	1710	184	14.23	0.71

007- Appendix G- Stack Loss Efficiency Data/results (page 18 of 46)

SBI Laboratories, Inc.

Manufacturer: SBI
Model: Max Caddy
Date: 02-05-10
Run: 6
Control #: 245/20712-0000121
Test Duration: 490
Output Category: 2

Technicians: _____

Test Results in Accordance with CSA B415.1-10

	HHV Basis	LHV Basis
Overall Efficiency	79.5%	85.7%
Combustion Efficiency	95.8%	95.8%
Heat Transfer Efficiency	83%	89.4%

Output Rate (kJ/h)	33 687	31 956	**(Btu/h)**
Burn Rate (kg/h)	2.13	4.69	**(lb/h)**
Input (kJ/h)	42 356	40 180	**(Btu/h)**

Test Load Weight (dry kg)	17.39	38.34	**dry lb**
MC wet (%)	17.84		
MC dry (%)	21.71		
Particulate (g)	39.92		
CO (g)	1 104		
Test Duration (h)	8.17		

Emissions	**Particulate**	**CO**
g/MJ Output	0.15	4.01
g/kg Dry Fuel	2.30	63.49
g/h	4.89	135.23
lb/MM Btu Output	0.34	9.33

Air/Fuel Ratio (A/F)	16.56

VERSION: **2.4** **2010-04-15**

007- Appendix G- Stack Loss Efficiency Data/results (page 19 of 46)

VERSION: 2.4 2010-04-15

Manufacturer: SBI
Model: Max Caddy
Date: 2010-01-12
Run: 1
Control #: 3198245/20712-0000121
Test Duration: 220
Output Category: 4

Wood Moisture (% wet): 17.60
Load Weight (lb wet): 47.34
Burn Rate (dry kg/h): 4.83
Total Particulate Emissions: 18.6 g

Appliance Type: Non-Cat (Cat, Non-Cat, Pellet)

Temp. Units F (F or C)
Weight Units lb (kg or lb)

Fuel Data

	Oak	
HHV	19 887	kJ/kg
%C	50	
%H	6.6	
%O	42.9	
%Ash	0.5	

Default Fuel Values

	D. Fir	Oak
HHV (kJ/kg)	19 810	19 887
%C	48.73	50
%H	6.87	6.6
%O	43.9	42.9
%Ash	0.5	0.5

Note 1: For other fuels, use the heating value and fuel composition determined by analysis of fuel sample in accordance with Clause 9.2.

Note 2: In cases where the "Fuel Weight Remaining" is the same for three or more readings in a row, a "divide by zero error" will occur in the calculation sheet. In such cases, adjust the weight values by interpolation between the first occurence and the next reading showing a decrease in weight.

	Averages	0.32	6.53	13.57	350.58	88.79
					Temp. (ºF)	
Elapsed Time (min)	Fuel Weight Remaining (lb)	Flue Gas Composition (%) CO	CO_2	O_2	Flue Gas	Room Temp
0	47.34	0.31	3.88	16.20	320.4	85.3
10	40.97	1.59	15.43	3.41	511.2	85.8
20	35.32	0.26	14.40	5.79	524.1	89.8
30	30.42	0.15	12.83	7.44	488.7	89.2
40	25.62	0.14	12.63	7.67	488.1	91.6
50	21.52	0.14	10.43	9.84	448.0	86.9
60	18.17	0.12	9.56	10.72	424.6	90.3
70	14.97	0.13	8.83	11.52	410.2	88.5
80	12.12	0.13	8.18	12.02	396.9	92.3
90	9.57	0.10	8.04	12.09	389.8	91.6
100	7.72	0.11	6.78	13.18	369.1	93.4
110	6.37	0.14	5.86	14.14	346.8	91.2
120	5.12	0.19	5.05	15.15	330.4	88.2
130	4.42	0.25	4.18	15.89	307.8	89.4
140	3.77	0.35	3.65	16.36	289.6	91.2
150	3.02	0.44	3.22	16.82	273.4	89.2
160	2.57	0.44	2.90	17.15	267.3	90.1
170	2.07	0.46	2.72	17.34	260.2	87.8
180	1.77	0.44	2.45	17.67	250.3	88.0
190	1.12	0.40	2.38	17.80	245.7	86.5
200	0.72	0.39	2.40	17.79	243.1	86.4
210	0.37	0.37	2.29	17.95	242.1	84.9
220	-0.03	0.34	2.10	18.15	235.8	84.6

007- Appendix G- Stack Loss Efficiency Data/results (page 20 of 46)

Manufacturer: SBI
Model: Max Caddy
Date: 01-12-10
Run: 1
Control #: 3245/20712-0000121
Test Duration: 220 min

	HHV	LHV
Eff	73.17%	78.81%
Comb Eff	96.88%	96.88%
HT Eff	75.53%	81.35%
Output	70 241	kJ/h
Burn Rate	4.83	kg/h
Grams CO	845	g
Input	95 993	kJ/h
MC wet	17.60	

Note: In the "Input data", "Calc. % O_2", "Fuel Properties", and "Mass Balance" columns, [e], [d], [g], [a], [b], [c], [h], [u], [w], [j], and [k] refer to their respective variables in Clauses 13.7.3 to 13.7.5.

Ultimate CO_2
$CO_{2\text{-ult}}$ 19.80
F_0
1.052

Overall Heating Efficiency: 73.17%
Combustion Efficiency: 96.88%
Heat Transfer Efficiency: 75.53%

Air Fuel Ratio (A/F)	
Dry Molecular Weight (M_d)	29.60
Dry Moles Exhaust Gas (N_d):	520.11
Air Fuel Ratio (A/F)	14.88

%HC 1.32

Heat Output: 66 632 Btu/h 70 241 kJ/h
Heat Input: 91 060 Btu/h 95 993 kJ/h

Burn Duration: 3.67 h

Burn Rate: 10.64 lb/h 4.827 kg/h

Stack Temp: 352.0 Deg. F 177.8 Deg. C

Combustion Efficiency:
Total Input (kJ):
Total Output (kJ):
Efficiency:
Total CO (g):

Averages		0.32	6.53	3.12	20.55	13.86	176.99	31.55	95.0%	72.0%	68.5%	25.02	5.82	72.90	4.80	72.90	353240	4.17	6.60	2.68	19887.00
INPUT DATA				Oxygen Calculation			Input Data		Combust	Heat	Net	Air	Wet Wt	% Wet	Dry Wt.	% Dry		Fuel Properties			
Elapsed Time	Weight Remaining (kg)	% CO [e]	% CO_2 [d]	Excess Air EA	Total O_2	Calc. % O_2 [g]	Flue Gas (°C)	Room Temp (°C)	Eff %	Transfer %	Eff %	Fuel Ratio	Now Wt	Consumed x	Now Wt_{dry}	Comsumed y	Total Input	Carbon /12= [a]	Hydrogen /1= [b]	Oxygen /16= [c]	Calorific Value
0	21.48	0.31	3.88	372.6%	20.70	16.66	160.2	29.6	94.8%	68.1%	64.6%	28.7	21.48	0.00	17.70	0.00	0	4.17	6.60	2.68	19887.00
10	18.59	1.59	15.43	16.3%	19.96	3.74	266.2	29.9	92.1%	77.6%	71.5%	7.0	18.59	13.46	15.32	13.46	68365	4.17	6.60	2.68	19887.00
20	16.03	0.26	14.40	35.1%	20.10	5.57	273.4	32.1	98.6%	77.0%	76.0%	8.3	16.03	25.39	13.20	25.39	39220	4.17	6.60	2.68	19887.00
30	13.80	0.15	12.83	52.6%	20.19	7.29	253.7	31.8	99.2%	77.0%	76.3%	9.4	13.80	35.74	11.37	35.74	36060	4.17	6.60	2.68	19887.00
40	11.62	0.14	12.63	55.1%	20.21	7.51	253.4	33.1	99.2%	76.9%	76.3%	9.5	11.62	45.88	9.58	45.88	33086	4.17	6.60	2.68	19887.00
50	9.76	0.14	10.43	87.3%	20.33	9.83	231.1	30.5	99.1%	76.1%	75.4%	11.5	9.76	54.54	8.05	54.54	27696	4.17	6.60	2.68	19887.00
60	8.24	0.12	9.56	104.6%	20.38	10.76	218.1	32.4	99.3%	76.1%	75.6%	12.6	8.24	61.62	6.79	61.62	24350	4.17	6.60	2.68	19887.00
70	6.79	0.13	8.83	121.0%	20.43	11.53	210.1	31.4	99.1%	75.7%	75.0%	13.6	6.79	68.38	5.60	68.38	22491	4.17	6.60	2.68	19887.00
80	5.50	0.13	8.18	138.3%	20.46	12.22	202.7	33.5	99.1%	75.5%	74.8%	14.6	5.50	74.40	4.53	74.40	20075	4.17	6.60	2.68	19887.00
90	4.34	0.10	8.04	143.3%	20.47	12.38	198.8	33.1	99.4%	75.6%	75.2%	14.9	4.34	79.78	3.58	79.78	16357	4.17	6.60	2.68	19887.00
100	3.50	0.11	6.78	187.4%	20.54	13.71	187.3	34.1	99.2%	74.6%	74.0%	17.6	3.50	83.69	2.89	83.69	11896	4.17	6.60	2.68	19887.00
110	2.89	0.14	5.86	230.0%	20.60	14.67	174.9	32.9	98.7%	73.7%	72.7%	20.2	2.89	86.54	2.38	86.54	9666	4.17	6.60	2.68	19887.00
120	2.32	0.19	5.05	277.9%	20.64	15.49	165.8	31.2	97.7%	72.3%	70.7%	23.1	2.32	89.18	1.91	89.18	7249	4.17	6.60	2.68	19887.00
130	2.01	0.25	4.18	347.0%	20.69	16.38	153.2	31.9	96.2%	71.0%	68.3%	27.3	2.01	90.66	1.65	90.66	5019	4.17	6.60	2.68	19887.00
140	1.71	0.35	3.65	395.1%	20.71	16.89	143.1	32.9	93.7%	70.4%	66.0%	30.0	1.71	92.04	1.41	92.04	5205	4.17	6.60	2.68	19887.00
150	1.37	0.44	3.22	441.0%	20.73	17.29	134.1	31.8	91.1%	69.6%	63.4%	32.7	1.37	93.62	1.13	93.62	4461	4.17	6.60	2.68	19887.00
160	1.17	0.44	2.90	492.9%	20.75	17.63	130.7	32.3	90.3%	68.4%	61.7%	35.8	1.17	94.57	0.96	94.57	3532	4.17	6.60	2.68	19887.00
170	0.94	0.46	2.72	522.7%	20.76	17.81	126.8	31.0	89.3%	67.7%	60.4%	37.5	0.94	95.63	0.77	95.63	2974	4.17	6.60	2.68	19887.00
180	0.80	0.44	2.45	585.2%	20.77	18.10	121.3	31.1	88.8%	66.8%	59.4%	41.3	0.80	96.26	0.66	96.26	3532	4.17	6.60	2.68	19887.00
190	0.51	0.40	2.38	612.3%	20.78	18.20	118.7	30.3	89.6%	66.7%	59.8%	43.0	0.51	97.63	0.42	97.63	3903	4.17	6.60	2.68	19887.00
200	0.33	0.39	2.40	609.8%	20.78	18.18	117.3	30.2	89.9%	67.2%	60.4%	42.9	0.33	98.48	0.27	98.48	2788	4.17	6.60	2.68	19887.00
210	0.17	0.37	2.29	644.4%	20.79	18.31	116.7	29.4	90.1%	66.2%	59.6%	45.0	0.17	99.22	0.14	99.22	4052	4.17	6.60	2.68	19887.00
220	-0.01	0.34	2.10	711.6%	20.80	18.53	113.2	29.2	90.3%	65.1%	58.8%	49.1	-0.01	100.06	-0.01	100.06	1264	4.17	6.60	2.68	19887.00

007- Appendix G- Stack Loss Efficiency Data/results (page 21 of 46)

Moisture Content M_{Cwb}: 17.6

96.88%
351 976 333 832 (Btu)
257 552 244 275 (Btu)
73.17%
844.54

Moisture of Wood (wet basis): 17.6
Initial Dry Weight Wt_{do} (kg): 17.70
Moisture Content Dry 21.36

Dry kg : 17.70
CA: 50
HY: 6.6
OX: 42.9

Load Weight (kg): **21.48**

Fuel Heating	HHV	LHV		HHV	LHV
Value in kJ/kg - CV:	**19 887**	**18 464**	Btu/lb	**8555.6**	**7943.4**

17.60	**79.29**	**21.03**	**1.65**	**5.40**	**0.02**	**0.16**	**38.78**	**138.77**	**2.90**	**0.20**	**685.81**	**32.77**	**11.87**	**450.14**	**5927.40**	**4401.36**	**4265.39**	**4221.19**	**5836.18**	**5099.59**	**304.70**	**5383.55**	**10628.83**
Mw Moisture	**Mass Balance (moles/100 mole dry flue gas)**					**kg Wood per 100 mole dfp**	**Moles per kg of Dry Wood**						**Moisture Present**	**Stack Temp K**	**Heat Content Change - Ambient to Stack Temperature Flue Gas Constituent**						**Room Temp K**		
Fuel Burnt	**[h]**	**[u]**	**[w]**	**[j]**	**[k]**	**Nk**	**CO_2**	**O_2**	**CO**	**HC**	**N_2**	**H_2O**			**CO_2**	**O_2**	**CO**	**N_2**	**CH_4**	**H_2O**		**CO_2**	**O_2**
17.60	79.15	20.99	1.01	3.30	0.02	0.10	38.61	165.83	3.08	0.18	787.59	32.80	11.87	433.35	5251.88	3930.33	3816.53	3775.37	5104.08	4565.37	302.75	202.78	651.76
17.60	79.24	21.02	4.14	13.21	0.22	0.41	37.47	9.08	3.86	0.54	192.45	32.08	11.87	539.35	9866.66	7224.35	6975.75	6908.81	9938.35	8331.90	303.05	369.73	65.57
17.60	79.77	21.16	3.53	11.58	0.03	0.35	41.05	15.87	0.74	0.08	227.42	33.00	11.87	546.55	10108.32	7387.42	7129.70	7062.03	########	8514.66	305.25	414.98	117.26
17.60	79.73	21.15	3.12	10.27	0.01	0.31	41.36	23.50	0.48	0.03	257.03	33.10	11.87	526.85	9231.28	6773.52	6544.06	6480.50	9266.85	7817.46	304.95	381.81	159.17
17.60	79.72	21.15	3.07	10.10	0.01	0.31	41.39	24.60	0.46	0.03	261.27	33.11	11.87	526.55	9167.92	6725.67	6497.49	6434.45	9206.20	7761.72	306.25	379.46	165.45
17.60	79.60	21.11	2.54	8.37	0.00	0.25	41.30	38.94	0.55	0.02	315.21	33.13	11.87	504.25	8275.66	6101.76	5902.48	5843.58	8243.10	7053.40	303.65	341.82	237.59
17.60	79.56	21.10	2.32	7.67	0.00	0.23	41.36	46.56	0.52	0.00	344.16	33.16	11.87	491.25	7631.08	5639.26	5458.29	5403.14	7573.11	6523.62	305.55	315.59	262.59
17.60	79.51	21.09	2.15	7.10	0.00	0.21	41.27	53.89	0.61	0.00	371.59	33.16	11.87	483.25	7320.11	5419.45	5248.03	5194.48	7242.60	6273.13	304.55	302.08	292.03
17.60	79.47	21.08	1.99	6.58	0.00	0.20	41.22	61.57	0.66	0.00	400.51	33.17	11.87	475.85	6917.95	5127.31	4966.53	4915.56	6832.46	5937.08	306.65	285.19	315.70
17.60	79.48	21.08	1.95	6.45	-0.01	0.19	41.39	63.74	0.51	-0.03	409.14	33.22	11.87	471.95	6764.52	5018.04	4861.80	4811.67	6671.18	5812.24	306.25	279.97	319.86
17.60	79.40	21.06	1.65	5.46	-0.01	0.16	41.24	83.39	0.67	-0.04	483.00	33.24	11.87	460.45	6230.90	4632.26	4490.53	4443.70	6122.88	5369.19	307.25	256.98	386.30
17.60	79.33	21.04	1.44	4.76	0.00	0.14	40.92	102.41	0.98	-0.02	553.99	33.21	11.87	448.05	5747.37	4284.91	4156.83	4112.85	5621.18	4971.16	306.05	235.18	438.81
17.60	79.27	21.03	1.26	4.15	0.00	0.13	40.34	123.76	1.52	0.02	633.13	33.12	11.87	438.95	5426.78	4055.07	3936.14	3894.01	5287.55	4707.96	304.35	218.90	501.84
17.60	79.19	21.01	1.07	3.50	0.01	0.11	39.42	154.49	2.36	0.09	746.88	32.98	11.87	426.35	4869.63	3647.89	3543.16	3504.76	4724.66	4238.65	305.05	191.98	563.58
17.60	79.11	20.99	0.97	3.14	0.02	0.10	37.99	175.74	3.64	0.25	823.40	32.68	11.87	416.25	4409.47	3309.56	3216.13	3180.94	4264.23	3847.91	306.05	167.51	581.61
17.60	79.05	20.97	0.89	2.86	0.04	0.09	36.48	195.90	4.99	0.41	895.67	32.35	11.87	407.25	4078.38	3067.66	2982.68	2949.70	3929.61	3569.12	304.95	148.80	600.95
17.60	79.03	20.96	0.81	2.60	0.04	0.08	35.98	218.70	5.46	0.44	980.50	32.29	11.87	403.85	3918.77	2949.43	2868.17	2836.36	3771.81	3432.24	305.45	140.99	645.04
17.60	79.01	20.96	0.77	2.47	0.04	0.08	35.40	231.73	5.99	0.49	1028.21	32.18	11.87	399.95	3808.00	2869.25	2790.99	2759.87	3658.20	3340.13	304.15	134.79	664.89
17.60	79.01	20.96	0.70	2.25	0.03	0.07	35.08	259.22	6.30	0.50	1131.25	32.17	11.87	394.45	3578.34	2699.34	2626.48	2597.04	3430.72	3143.50	304.25	125.53	699.73
17.60	79.02	20.96	0.67	2.17	0.03	0.07	35.48	271.36	5.96	0.43	1178.14	32.31	11.87	391.85	3502.57	2644.12	2573.22	2544.28	3353.84	3079.91	303.45	124.29	717.50
17.60	79.03	20.96	0.68	2.18	0.03	0.07	35.67	270.30	5.80	0.41	1174.64	32.36	11.87	390.45	3449.17	2604.65	2535.01	2506.46	3300.86	3034.24	303.35	123.04	704.03
17.60	79.03	20.96	0.64	2.08	0.02	0.06	35.73	285.69	5.77	0.38	1232.92	32.41	11.87	389.85	3455.32	2610.08	2540.49	2511.83	3305.02	3040.86	302.55	123.45	745.67
17.60	79.03	20.96	0.59	1.91	0.02	0.06	35.75	315.49	5.79	0.33	1345.58	32.50	11.87	386.35	3320.20	2510.02	2443.59	2415.92	3171.39	2925.03	302.35	118.71	791.89

007- Appendix G- Stack Loss Efficiency Data/results (page 22 of 46)

SUMS					AVERAGE	SUMS						
19095.97	54440.07	4056.35	36994.67	13392.07	6260.50	94424.44	10994.54	83429.9	258815.6	10994.6	844.5	44.2
Energy Losses (kJ/kg of Dry Fuel) Flue Gas Constituent					Total Loss Rate	Total Loss	Chemical Loss 1	Sensible and Latent Loss	Total Output	Chem Loss 2	Grams Produced	
CO	N_2	CH_4	H_2O Comb	H_2O Fuel MC							CO	HC
884.64	2973.45	161.80	1592.14	575.92	7042.50	0.00	0	0.00	0	0	0.00	0.00
1119.69	1329.58	487.71	1677.93	620.62	5670.82	19494.54	5415	14079.92	48871	5415	371.68	29.80
215.05	1606.08	73.42	1732.10	622.79	4781.68	9430.15	557	8873.32	29790	557	40.93	2.57
140.01	1665.67	29.05	1714.20	614.52	4704.42	8530.28	300	8230.02	27530	300	24.55	0.94
132.82	1681.10	24.27	1712.90	613.85	4709.85	7835.79	256	7579.82	25250	256	21.37	0.72
160.17	1841.97	16.13	1690.37	605.45	4893.49	6814.92	241	6574.16	20881	241	21.62	0.40
149.74	1859.53	0.67	1674.55	599.16	4861.83	5952.88	181	5772.19	18397	181	17.80	0.01
175.12	1930.20	1.66	1666.14	596.19	4963.41	5613.33	196	5417.03	16878	196	19.24	0.03
188.66	1968.75	-3.16	1655.53	592.20	5002.87	5050.08	184	4866.09	15025	184	18.52	-0.06
148.18	1968.63	-24.39	1653.74	590.72	4936.72	4060.48	100	3960.56	12297	100	11.86	-0.36
192.37	2146.31	-32.45	1639.91	585.46	5174.88	3095.54	94	3001.54	8801	94	11.21	-0.35
280.72	2278.50	-19.70	1625.29	580.74	5419.55	2634.04	125	2509.09	7032	125	13.30	-0.17
435.45	2465.43	19.57	1612.28	577.62	5831.08	2125.54	164	1961.90	5124	164	15.49	0.13
675.62	2617.65	84.15	1589.78	572.05	6294.81	1588.55	190	1399.04	3430	190	16.66	0.38
1042.57	2619.19	219.44	1562.42	567.41	6760.15	1769.17	327	1442.24	3435	327	26.69	1.03
1425.70	2641.97	363.63	1537.97	564.10	7283.12	1633.75	398	1236.06	2827	398	31.31	1.46
1560.46	2781.06	392.13	1530.52	562.48	7612.68	1351.91	344	1008.23	2180	344	27.14	1.25
1710.73	2837.74	441.45	1522.31	561.39	7873.30	1177.42	319	858.34	1797	319	25.07	1.18
1799.45	2937.90	442.71	1515.84	559.05	8080.22	1434.93	395	1040.00	2097	395	31.33	1.41
1703.06	2997.52	382.14	1520.17	558.30	8002.98	1570.82	406	1164.83	2333	406	32.78	1.34
1655.20	2944.18	362.15	1520.80	557.76	7867.15	1102.97	281	822.39	1685	281	22.76	0.91
1648.21	3096.88	337.12	1523.65	557.83	8032.80	1636.74	401	1235.46	2415	401	32.93	1.23
1652.36	3250.81	296.86	1524.11	556.46	8191.20	520.61	123	397.69	743	123	10.30	0.34

007- Appendix G- Stack Loss Efficiency Data/results (page 23 of 46)

SBI Laboratories, Inc.

Manufacturer: SBI
Model: Max Caddy
Date: 01-12-10
Run: 1
Control #: 245/20712-0000121
Test Duration: 220
Output Category: 4

Technicians: _____

Test Results in Accordance with CSA B415.1-10

	HHV Basis	LHV Basis
Overall Efficiency	73.2%	78.8%
Combustion Efficiency	96.9%	96.9%
Heat Transfer Efficiency	76%	81.4%

Output Rate (kJ/h)	70 241	66 632	**(Btu/h)**
Burn Rate (kg/h)	4.83	10.64	**(lb/h)**
Input (kJ/h)	95 993	91 060	**(Btu/h)**

Test Load Weight (dry kg)	17.70	39.01	**dry lb**
MC wet (%)	17.6		
MC dry (%)	21.36		
Particulate (g)	18.6		
CO (g)	845		
Test Duration (h)	3.67		

Emissions	**Particulate**	**CO**
g/MJ Output	0.07	3.28
g/kg Dry Fuel	1.05	47.72
g/h	5.07	230.33
lb/MM Btu Output	0.17	7.62

Air/Fuel Ratio (A/F)	14.88

VERSION: **2.4** **2010-04-15**

007- Appendix G- Stack Loss Efficiency Data/results (page 24 of 46)

VERSION: 2.4 2010-04-15

Manufacturer: SBI
Model: Max Caddy
Date: 2010-01-13
Run: 2
Control #: 3198245/20712-0000121
Test Duration: 1120
Output Category: 1

Appliance Type: Non-Cat (Cat, Non-Cat, Pellet)

Temp. Units F (F or C)
Weight Units lb (kg or lb)

Default Fuel Values

	D. Fir	Oak
HHV (kJ/kg)	19 810	19 887
%C	48.73	50
%H	6.87	6.6
%O	43.9	42.9
%Ash	0.5	0.5

Fuel Data

	Oak	
HHV	19 887	kJ/kg
%C	50	
%H	6.6	
%O	42.9	
%Ash	0.5	

Wood Moisture (% wet): 17.75
Load Weight (lb wet): 61.90
Burn Rate (dry kg/h): 1.24
Total Particulate Emissions: 120.02 g

Note 1: For other fuels, use the heating value and fuel composition determined by analysis of fuel sample in accordance with Clause 9.2.

Note 2: In cases where the "Fuel Weight Remaining" is the same for three or more readings in a row, a "divide by zero error" will occur in the calculation sheet. In such cases, adjust the weight values by interpolation between the first occurence and the next reading showing a decrease in weight.

	Averages	0.58	4.52	15.42	134.74	81.46
					Temp. (°F)	
Elapsed Time (min)	Fuel Weight Remaining (lb)	Flue Gas Composition (%) CO	CO_2	O_2	Flue Gas	Room Temp
0	61.90	0.74	4.30	15.22	162.7	84.2
10	59.37	0.66	3.72	11.52	198.9	84.6
20	58.07	0.46	5.23	14.87	172.4	83.8
30	56.82	0.53	5.42	14.57	171.7	83.7
40	55.67	0.69	4.59	15.32	163.0	84.0
50	54.07	0.43	7.54	13.15	202.6	84.0
60	51.72	0.26	10.40	9.89	234.5	83.8
70	49.87	0.31	8.01	12.35	221.0	84.4
80	47.92	0.29	8.69	11.79	221.9	84.2
90	45.72	0.37	9.30	11.05	225.7	84.4
100	43.52	0.25	9.41	11.14	222.8	83.8
110	41.47	0.35	8.21	12.17	212.7	85.5
120	39.52	0.34	8.59	11.93	212.7	86.2
130	37.52	0.34	8.67	11.86	212.0	86.0
140	35.62	0.34	9.18	11.38	216.1	86.5
150	33.52	0.23	10.10	10.81	224.2	86.5
160	31.47	0.30	10.34	10.30	228.6	86.0
170	29.42	0.27	9.94	10.60	225.7	86.5
180	27.47	0.23	10.09	10.52	225.1	84.4
190	25.62	0.21	9.88	10.62	222.3	86.5
200	23.82	0.21	9.93	10.63	221.2	85.1

007- Appendix G- Stack Loss Efficiency Data/results (page 25 of 46)

210	22.12	0.20	9.79	10.51	218.8	86.2
220	20.62	0.15	8.90	11.50	206.4	86.7
230	19.47	0.19	7.03	13.14	187.5	86.9
240	18.42	0.30	6.52	13.49	176.4	86.2
250	17.72	0.49	4.57	15.32	153.9	86.4
260	16.87	0.88	4.48	15.00	141.6	85.6
270	16.27	1.23	4.06	15.37	135.1	86.0
280	15.62	1.33	4.41	14.93	130.5	84.2
290	15.02	1.21	4.81	14.57	127.6	84.7
300	14.42	1.34	4.73	14.59	125.6	85.6
310	13.77	1.37	4.85	14.46	124.5	85.1
320	13.12	1.56	4.93	14.47	125.2	84.4
330	12.92	1.11	4.31	14.72	123.4	83.8
340	12.57	1.03	4.63	14.37	122.2	83.8
350	12.22	0.99	4.71	14.43	121.1	83.7
360	11.92	0.94	4.63	14.55	115.9	84.2
370	11.82	0.91	4.71	14.56	115.9	84.4
380	11.62	0.90	4.81	14.59	116.4	83.3
390	11.37	0.86	4.90	14.60	117.5	83.7
400	11.12	0.84	4.73	14.82	116.8	84.2
410	10.87	0.82	4.74	14.73	116.8	84.2
420	10.62	0.82	4.46	14.83	118.0	83.8
430	10.47	0.80	4.58	14.95	114.3	82.2
440	10.12	0.75	4.54	15.03	116.2	83.3
450	9.92	0.73	4.50	15.06	116.6	83.1
460	9.77	0.66	4.25	15.26	116.4	83.3
470	9.67	0.66	4.22	15.38	115.3	83.3
480	9.52	0.67	4.29	15.50	113.9	83.1
490	9.32	0.72	4.36	15.34	113.54	82.4
500	9.02	0.66	4.25	15.33	115.88	82.76
510	8.92	0.64	4.14	15.63	113.54	83.12
520	8.77	0.65	4.35	15.44	113.9	82.22
530	8.62	0.65	4.01	15.57	115.34	82.4
540	8.37	0.64	4.07	15.78	112.64	82.76
550	8.17	0.62	4.11	15.67	113.54	82.04
560	7.97	0.58	3.73	15.98	114.08	82.76
570	7.77	0.58	3.69	16.21	111.74	81.32
580	7.57	0.58	3.73	15.96	113.72	81.68
590	7.37	0.6	3.72	16.26	111.56	81.14
600	7.27	0.59	3.71	16.06	113.54	81.68

007- Appendix G- Stack Loss Efficiency Data/results (page 26 of 46)

610	7.07	0.59	3.71	16.22	111.38	80.96
620	6.92	0.57	3.67	16.11	113.36	81.32
630	6.82	0.57	3.7	16.32	111.56	80.96
640	6.67	0.53	3.44	16.38	112.1	81.86
650	6.47	0.58	3.63	16.19	113.54	80.96
660	6.37	0.58	3.59	16.51	111.56	80.6
670	6.22	0.54	3.45	16.4	112.28	80.78
680	5.97	0.63	3.46	16.41	113.72	80.42
690	5.82	0.59	3.4	16.65	111.56	80.78
700	5.67	0.55	3.2	16.71	111.02	80.78
710	5.52	0.55	3.26	16.61	112.28	80.6
720	5.32	0.57	3.37	16.64	111.02	79.88
730	5.22	0.56	3.29	16.8	109.94	80.24
740	5.12	0.55	3.23	16.68	110.66	80.42
750	4.87	0.57	3.36	16.55	111.74	79.52
760	4.77	0.63	3.4	16.6	109.94	79.88
770	4.62	0.59	3.3	16.58	109.94	80.24
780	4.47	0.55	3.28	16.63	111.74	79.7
790	4.32	0.55	3.34	16.77	110.66	79.88
800	4.22	0.56	3.27	16.77	109.22	80.24
810	4.02	0.61	3.12	16.75	111.02	79.88
820	3.82	0.59	3.24	16.67	112.1	79.52
830	3.72	0.58	3.21	16.85	110.48	79.52
840	3.62	0.55	3.11	16.91	110.48	79.88
850	3.47	0.57	3.12	16.85	112.28	79.7
860	3.37	0.56	3.18	16.91	111.74	78.8
870	3.27	0.55	3.03	17.15	110.66	79.16
880	3.12	0.51	2.94	17.11	111.02	79.52
890	2.87	0.51	2.97	17.07	112.28	78.98
900	2.72	0.51	2.99	17.27	110.84	78.44
910	2.57	0.49	2.88	17.39	109.58	78.62
920	2.42	0.49	2.79	17.39	111.02	77.54
930	2.27	0.47	2.74	17.44	111.92	77.18
940	2.07	0.49	2.65	17.48	112.28	76.82
950	1.87	0.48	2.61	17.54	111.92	76.64
960	1.67	0.51	2.6	17.52	111.38	76.1
970	1.52	0.49	2.53	17.74	110.66	75.2
980	1.37	0.48	2.47	17.84	110.12	75.74
990	1.27	0.47	2.39	17.93	109.58	75.02
1000	1.22	0.45	2.32	17.92	109.4	74.3

007- Appendix G- Stack Loss Efficiency Data/results (page 27 of 46)

1010	1.12	0.44	2.26	17.97	109.4	74.3
1020	0.87	0.46	2.26	17.97	108.86	75.02
1030	0.72	0.43	2.16	18.08	109.4	74.66
1040	0.62	0.42	2.05	18.21	109.76	74.48
1050	0.52	0.42	2.05	18.34	108.86	73.76
1060	0.47	0.4	1.99	18.49	107.96	74.12
1070	0.42	0.39	1.9	18.51	106.34	75.02
1080	0.32	0.38	1.85	18.52	105.44	75.74
1090	0.22	0.38	1.87	18.49	105.62	76.1
1100	0.17	0.38	1.9	18.56	105.26	75.74
1110	0.07	0.37	1.82	18.64	104.18	76.28
1120	-0.03	0.38	1.83	18.52	104	76.82

007- Appendix G- Stack Loss Efficiency Data/results (page 28 of 46)

Manufacturer: SBI
Model: Max Caddy
Date: 01-13-10
Run: 2
Control #: 3245/20712-0000121
Test Duration: 1120 min

	HHV	LHV
Eff	78.98%	85.07%
Comb Eff	93.79%	93.79%
HT Eff	84.21%	90.70%
Output	19 438	kJ/h
Burn Rate	1.24	kg/h
Grams CO	2 141	g
Input	24 610	kJ/h
MC wet	17.75	

Note: In the "Input data", "Calc. % O_2", "Fuel Properties", and "Mass Balance" columns, [e], [d], [g], [a]. [b], [c], [h], [u], [w], [j], and [k] refer to their respective variables in Clauses 13.7.3 to 13.7.5.

Ultimate CO_2
$CO_{2\text{-ult}}$ 19.80
F_0
1.050

Overall Heating Efficiency:	78.98%	Dry Molecular Weight (M_d)	Air Fuel Ratio (A/F)
Combustion Efficiency:	93.79%	Dry Moles Exhaust Gas (N_f):	
Heat Transfer Efficiency:	84.21%	Air Fuel Ratio (A/F)	

Heat Output:	18 439	Btu/h	19 438	kJ/h
Heat Input:	23 346	Btu/h	24 610	kJ/h
Burn Duration:	18.67	h		
Burn Rate:	2.73	lb/h	1.238	kg/h
Stack Temp:	134.5	Deg. F	56.9	Deg. C

	Averages	0.58	4.52	3.59	20.65	15.84	57.08	27.48	89.9%	85.1%	76.5%	27.59	6.26	77.71
INPUT DATA				Oxygen Calculation			Input Data		Combust	Heat	Net	Air	Wet Wt	% Wet
Elapsed Time	Weight Remaining (kg)	% CO [e]	% CO_2 [d]	Excess Air EA	Total O_2	Calc. % O_2 [g]	Flue Gas (°C)	Room Temp (°C)	Eff %	Transfer %	Eff %	Fuel Ratio	Now Wt	Consumed x
0	28.09	0.74	4.30	292.9%	20.65	15.98	72.6	29.0	88.4%	82.7%	73.1%	23.6	28.09	0.00
10	26.94	0.66	3.72	352.1%	20.69	16.64	92.7	29.2	88.3%	78.5%	69.3%	27.1	26.94	4.09
20	26.35	0.46	5.23	248.0%	20.61	15.15	78.0	28.8	93.8%	83.4%	78.3%	21.1	26.35	6.19
30	25.78	0.53	5.42	232.8%	20.60	14.91	77.6	28.7	93.1%	83.6%	77.9%	20.1	25.78	8.21
40	25.26	0.69	4.59	275.0%	20.64	15.70	72.8	28.9	89.7%	83.1%	74.6%	22.5	25.26	10.06
50	24.53	0.43	7.54	148.5%	20.48	12.73	94.8	28.9	95.8%	83.8%	80.3%	15.1	24.53	12.65
60	23.47	0.26	10.40	85.8%	20.33	9.80	112.5	28.8	98.2%	84.2%	82.6%	11.4	23.47	16.45
70	22.63	0.31	8.01	138.0%	20.46	12.30	105.0	29.1	97.2%	83.3%	81.0%	14.5	22.63	19.43
80	21.74	0.29	8.69	120.5%	20.42	11.59	105.5	29.0	97.6%	83.7%	81.7%	13.5	21.74	22.58
90	20.74	0.37	9.30	104.8%	20.38	10.90	107.6	29.1	97.0%	83.9%	81.4%	12.5	20.74	26.14
100	19.75	0.25	9.41	105.0%	20.38	10.85	106.0	28.8	98.1%	84.1%	82.5%	12.5	19.75	29.69
110	18.82	0.35	8.21	131.3%	20.45	12.06	100.4	29.7	96.9%	83.9%	81.3%	14.1	18.82	33.00
120	17.93	0.34	8.59	121.8%	20.43	11.67	100.4	30.1	97.1%	84.1%	81.7%	13.5	17.93	36.16
130	17.02	0.34	8.67	119.8%	20.42	11.58	100.0	30.0	97.1%	84.2%	81.8%	13.4	17.02	39.39
140	16.16	0.34	9.18	108.0%	20.39	11.04	102.3	30.3	97.3%	84.3%	82.0%	12.7	16.16	42.46
150	15.21	0.23	10.10	91.7%	20.35	10.13	106.8	30.3	98.4%	84.5%	83.1%	11.7	15.21	45.85
160	14.28	0.30	10.34	86.1%	20.33	9.84	109.2	30.0	97.8%	84.4%	82.6%	11.4	14.28	49.16
170	13.35	0.27	9.94	93.9%	20.35	10.28	107.6	30.3	98.0%	84.4%	82.7%	11.9	13.35	52.47
180	12.46	0.23	10.09	91.9%	20.35	10.14	107.3	29.1	98.4%	84.4%	83.0%	11.8	12.46	55.62
190	11.62	0.21	9.88	96.3%	20.36	10.38	105.7	30.3	98.5%	84.5%	83.3%	12.0	11.62	58.61
200	10.81	0.21	9.93	95.3%	20.36	10.32	105.1	29.5	98.5%	84.5%	83.3%	12.0	10.81	61.52
210	10.04	0.20	9.79	98.2%	20.37	10.48	103.8	30.1	98.6%	84.6%	83.4%	12.1	10.04	64.26
220	9.36	0.15	8.90	118.8%	20.42	11.45	96.9	30.4	98.9%	84.7%	83.8%	13.4	9.36	66.69

007- Appendix G- Stack Loss Efficiency Data/results (page 29 of 46)

230	8.83	0.19	7.03	174.3%	20.53	13.40	86.4	30.5	98.3%	84.5%	83.1%	16.8	8.83	68.55
240	8.36	0.30	6.52	190.4%	20.55	13.88	80.2	30.1	96.8%	84.6%	81.9%	17.7	8.36	70.24
250	8.04	0.49	4.57	291.3%	20.65	15.83	67.7	30.2	92.6%	84.2%	78.0%	23.7	8.04	71.37
260	7.65	0.88	4.48	269.4%	20.63	15.71	60.9	29.8	86.9%	84.6%	73.5%	22.1	7.65	72.75
270	7.38	1.23	4.06	274.3%	20.64	15.96	57.3	30.0	81.3%	84.3%	68.5%	22.1	7.38	73.72
280	7.09	1.33	4.41	245.0%	20.61	15.54	54.7	29.0	81.3%	84.8%	69.0%	20.4	7.09	74.77
290	6.81	1.21	4.81	228.9%	20.59	15.18	53.1	29.3	83.8%	85.6%	71.7%	19.5	6.81	75.74
300	6.54	1.34	4.73	226.2%	20.59	15.19	52.0	29.8	82.1%	85.6%	70.3%	19.3	6.54	76.70
310	6.25	1.37	4.85	218.4%	20.58	15.05	51.4	29.5	82.1%	85.7%	70.4%	18.8	6.25	77.75
320	5.95	1.56	4.93	205.1%	20.57	14.86	51.8	29.1	80.5%	85.5%	68.8%	18.0	5.95	78.80
330	5.86	1.11	4.31	265.4%	20.63	15.76	50.8	28.8	83.5%	85.5%	71.4%	21.7	5.86	79.13
340	5.70	1.03	4.63	249.9%	20.61	15.47	50.1	28.8	85.4%	85.9%	73.4%	20.8	5.70	79.69
350	5.54	0.99	4.71	247.4%	20.61	15.41	49.5	28.7	86.1%	86.1%	74.1%	20.7	5.54	80.26
360	5.41	0.94	4.63	255.5%	20.62	15.52	46.6	29.0	86.5%	86.5%	74.8%	21.2	5.41	80.74
370	5.36	0.91	4.71	252.4%	20.62	15.45	46.6	29.1	87.0%	86.6%	75.4%	21.1	5.36	80.90
380	5.27	0.90	4.81	246.8%	20.61	15.35	46.9	28.5	87.4%	86.6%	75.6%	20.7	5.27	81.23
390	5.16	0.86	4.90	243.8%	20.61	15.28	47.5	28.7	88.1%	86.6%	76.3%	20.6	5.16	81.63
400	5.05	0.84	4.73	255.5%	20.62	15.47	47.1	29.0	88.0%	86.6%	76.2%	21.3	5.05	82.04
410	4.93	0.82	4.74	256.2%	20.62	15.47	47.1	29.0	88.3%	86.6%	76.5%	21.3	4.93	82.44
420	4.82	0.82	4.46	275.0%	20.64	15.77	47.8	28.8	87.7%	86.3%	75.7%	22.5	4.82	82.84
430	4.75	0.80	4.58	268.1%	20.63	15.65	45.7	27.9	88.2%	86.6%	76.4%	22.1	4.75	83.09
440	4.59	0.75	4.54	274.3%	20.64	15.72	46.8	28.5	88.8%	86.6%	76.9%	22.5	4.59	83.65
450	4.50	0.73	4.50	278.6%	20.64	15.77	47.0	28.4	89.0%	86.5%	77.0%	22.7	4.50	83.97
460	4.43	0.66	4.25	303.3%	20.66	16.08	46.9	28.5	89.5%	86.4%	77.3%	24.2	4.43	84.22
470	4.39	0.66	4.22	305.8%	20.66	16.11	46.3	28.5	89.4%	86.5%	77.4%	24.4	4.39	84.38
480	4.32	0.67	4.29	299.2%	20.66	16.03	45.5	28.4	89.4%	86.6%	77.5%	24.0	4.32	84.62
490	4.23	0.72	4.36	289.8%	20.65	15.93	45.3	28.0	88.8%	86.6%	76.9%	23.4	4.23	84.94
500	4.09	0.66	4.25	303.3%	20.66	16.08	46.6	28.2	89.5%	86.4%	77.3%	24.2	4.09	85.43
510	4.05	0.64	4.14	314.3%	20.67	16.21	45.3	28.4	89.6%	86.6%	77.6%	24.9	4.05	85.59
520	3.98	0.65	4.35	296.0%	20.65	15.98	45.5	27.9	89.8%	86.6%	77.8%	23.8	3.98	85.83
530	3.91	0.65	4.01	324.9%	20.67	16.34	46.3	28.0	89.1%	86.3%	76.9%	25.5	3.91	86.07
540	3.80	0.64	4.07	320.4%	20.67	16.28	44.8	28.2	89.4%	86.6%	77.4%	25.3	3.80	86.48
550	3.71	0.62	4.11	318.7%	20.67	16.25	45.3	27.8	89.8%	86.5%	77.7%	25.2	3.71	86.80
560	3.62	0.58	3.73	359.4%	20.69	16.67	45.6	28.2	89.6%	86.3%	77.3%	27.6	3.62	87.12
570	3.53	0.58	3.69	363.8%	20.69	16.71	44.3	27.4	89.5%	86.3%	77.3%	27.9	3.53	87.45
580	3.43	0.58	3.73	359.4%	20.69	16.67	45.4	27.6	89.6%	86.2%	77.3%	27.6	3.43	87.77
590	3.34	0.60	3.72	358.4%	20.69	16.67	44.2	27.3	89.3%	86.3%	77.0%	27.6	3.34	88.09
600	3.30	0.59	3.71	360.5%	20.69	16.69	45.3	27.6	89.4%	86.2%	77.1%	27.7	3.30	88.26
610	3.21	0.59	3.71	360.5%	20.69	16.69	44.1	27.2	89.4%	86.3%	77.2%	27.7	3.21	88.58
620	3.14	0.57	3.67	367.0%	20.70	16.74	45.2	27.4	89.7%	86.1%	77.3%	28.1	3.14	88.82
630	3.09	0.57	3.70	363.8%	20.69	16.71	44.2	27.2	89.7%	86.3%	77.5%	27.9	3.09	88.98
640	3.03	0.53	3.44	398.8%	20.71	17.01	44.5	27.7	89.8%	86.1%	77.4%	30.0	3.03	89.22

007- Appendix G- Stack Loss Efficiency Data/results (page 30 of 46)

650	2.94	0.58	3.63	370.4%	20.70	16.78	45.3	27.2	89.4%	86.0%	76.9%	28.3	2.94	89.55
660	2.89	0.58	3.59	374.9%	20.70	16.82	44.2	27.0	89.3%	86.2%	76.9%	28.6	2.89	89.71
670	2.82	0.54	3.45	396.3%	20.71	16.99	44.6	27.1	89.7%	86.0%	77.1%	29.9	2.82	89.95
680	2.71	0.63	3.46	384.2%	20.71	16.93	45.4	26.9	88.1%	85.7%	75.5%	29.1	2.71	90.36
690	2.64	0.59	3.40	396.3%	20.71	17.02	44.2	27.1	88.6%	86.0%	76.2%	29.8	2.64	90.60
700	2.57	0.55	3.20	428.1%	20.72	17.25	43.9	27.1	88.8%	85.9%	76.3%	31.8	2.57	90.84
710	2.50	0.55	3.26	419.7%	20.72	17.19	44.6	27.0	89.0%	85.8%	76.3%	31.3	2.50	91.08
720	2.41	0.57	3.37	402.6%	20.71	17.06	43.9	26.6	88.9%	85.9%	76.4%	30.2	2.41	91.41
730	2.37	0.56	3.29	414.3%	20.72	17.15	43.3	26.8	88.9%	86.0%	76.4%	30.9	2.37	91.57
740	2.32	0.55	3.23	423.9%	20.72	17.22	43.7	26.9	88.9%	85.9%	76.4%	31.5	2.32	91.73
750	2.21	0.57	3.36	403.9%	20.71	17.07	44.3	26.4	88.9%	85.8%	76.3%	30.3	2.21	92.13
760	2.16	0.63	3.40	391.4%	20.71	16.99	43.3	26.6	87.9%	86.0%	75.6%	29.5	2.16	92.29
770	2.10	0.59	3.30	409.1%	20.72	17.12	43.3	26.8	88.4%	86.0%	76.0%	30.6	2.10	92.54
780	2.03	0.55	3.28	417.0%	20.72	17.16	44.3	26.5	89.0%	85.8%	76.4%	31.1	2.03	92.78
790	1.96	0.55	3.34	409.1%	20.72	17.10	43.7	26.6	89.2%	86.0%	76.7%	30.6	1.96	93.02
800	1.91	0.56	3.27	417.0%	20.72	17.17	42.9	26.8	88.8%	86.1%	76.4%	31.1	1.91	93.18
810	1.82	0.61	3.12	430.9%	20.73	17.30	43.9	26.6	87.4%	85.6%	74.8%	31.8	1.82	93.51
820	1.73	0.59	3.24	417.0%	20.72	17.18	44.5	26.4	88.2%	85.6%	75.5%	31.0	1.73	93.83
830	1.69	0.58	3.21	422.5%	20.72	17.22	43.6	26.4	88.3%	85.7%	75.7%	31.4	1.69	93.99
840	1.64	0.55	3.11	441.0%	20.73	17.34	43.6	26.6	88.6%	85.7%	75.9%	32.5	1.64	94.15
850	1.57	0.57	3.12	436.6%	20.73	17.32	44.6	26.5	88.2%	85.5%	75.4%	32.2	1.57	94.39
860	1.53	0.56	3.18	429.5%	20.73	17.27	44.3	26.0	88.6%	85.5%	75.8%	31.8	1.53	94.56
870	1.48	0.55	3.03	453.1%	20.73	17.43	43.7	26.2	88.3%	85.5%	75.5%	33.2	1.48	94.72
880	1.42	0.51	2.94	474.0%	20.74	17.55	43.9	26.4	88.9%	85.4%	75.9%	34.5	1.42	94.96
890	1.30	0.51	2.97	469.0%	20.74	17.52	44.6	26.1	89.0%	85.3%	75.9%	34.2	1.30	95.36
900	1.23	0.51	2.99	465.8%	20.74	17.49	43.8	25.8	89.0%	85.4%	76.0%	34.0	1.23	95.61
910	1.17	0.49	2.88	487.6%	20.75	17.62	43.1	25.9	89.1%	85.5%	76.1%	35.4	1.17	95.85
920	1.10	0.49	2.79	503.7%	20.75	17.72	43.9	25.3	88.8%	85.0%	75.5%	36.3	1.10	96.09
930	1.03	0.47	2.74	516.9%	20.76	17.78	44.4	25.1	89.1%	84.8%	75.6%	37.2	1.03	96.33
940	0.94	0.49	2.65	530.6%	20.76	17.86	44.6	24.9	88.3%	84.5%	74.7%	37.9	0.94	96.66
950	0.85	0.48	2.61	540.9%	20.76	17.91	44.4	24.8	88.4%	84.5%	74.7%	38.6	0.85	96.98
960	0.76	0.51	2.60	536.7%	20.76	17.91	44.1	24.5	87.7%	84.4%	74.0%	38.3	0.76	97.30
970	0.69	0.49	2.53	555.7%	20.77	17.99	43.7	24.0	87.9%	84.3%	74.1%	39.4	0.69	97.54
980	0.62	0.48	2.47	571.3%	20.77	18.06	43.4	24.3	87.9%	84.3%	74.1%	40.4	0.62	97.79
990	0.58	0.47	2.39	592.4%	20.78	18.15	43.1	23.9	87.8%	84.1%	73.9%	41.6	0.58	97.95
1000	0.55	0.45	2.32	614.9%	20.78	18.24	43.0	23.5	88.0%	83.9%	73.9%	43.0	0.55	98.03
1010	0.51	0.44	2.26	633.4%	20.78	18.30	43.0	23.5	88.1%	83.8%	73.8%	44.1	0.51	98.19
1020	0.39	0.46	2.26	628.0%	20.78	18.29	42.7	23.9	87.5%	84.0%	73.5%	43.8	0.39	98.59
1030	0.33	0.43	2.16	664.6%	20.79	18.42	43.0	23.7	87.9%	83.6%	73.5%	46.0	0.33	98.84
1040	0.28	0.42	2.05	701.7%	20.80	18.54	43.2	23.6	87.7%	83.3%	73.0%	48.3	0.28	99.00
1050	0.24	0.42	2.05	701.7%	20.80	18.54	42.7	23.2	87.7%	83.3%	73.0%	48.3	0.24	99.16
1060	0.21	0.40	1.99	728.5%	20.80	18.61	42.2	23.4	88.0%	83.3%	73.3%	49.9	0.21	99.24
1070	0.19	0.39	1.90	764.7%	20.81	18.71	41.3	23.9	87.8%	83.5%	73.4%	52.1	0.19	99.32
1080	0.15	0.38	1.85	788.0%	20.81	18.77	40.8	24.3	87.9%	83.7%	73.5%	53.5	0.15	99.48
1090	0.10	0.38	1.87	780.1%	20.81	18.75	40.9	24.5	88.0%	83.8%	73.7%	53.1	0.10	99.64
1100	0.08	0.38	1.90	768.5%	20.81	18.72	40.7	24.3	88.1%	83.8%	73.9%	52.4	0.08	99.73
1110	0.03	0.37	1.82	804.2%	20.81	18.81	40.1	24.6	88.1%	83.9%	73.9%	54.5	0.03	99.89
1120	-0.01	0.38	1.83	796.0%	20.81	18.79	40.0	24.9	87.8%	84.0%	73.8%	54.0	-0.01	100.05

007- Appendix G- Stack Loss Efficiency Data/results (page 31 of 46)

29.36		
661.94	%HC	
18.92	1.32	

Combustion Efficiency: 93.79%
Total Input (kJ): 459 393 435 712 (Btu)
Total Output (kJ): 362 849 344 145 (Btu)
Efficiency: 78.98%
Total CO (g): 2140.52

Moisture of Wood (wet basis):
Initial Dry Weight Wt_{d0} (kg):
Moisture Content Dry

Load Weight (kg): **28.09**
Fuel Heating Value in kJ/kg - CV: **HHV 19 887** **LHV 18 464** Btu/lb

5.31	77.03	459564	4.17	6.60	2.68	19887.00	17.75	79.06	20.97	1.24	3.97	0.06	0.12
Dry Wt.	% Dry		Fuel Properties				Mw	Mass Balance					kg Wood per
Now	Comsumed	Total	Carbon	Hydrogen	Oxygen	Calorific	Moisture	(moles/100 mole dry flue gas)					100 mole dfp
Wt_{dn}	y	Input	/12= [a]	/1= [b]	/16= [c]	Value	Fuel Burnt	[h]	[u]	[w]	[j]	[k]	Nk
23.10	0.00	0	4.17	6.60	2.68	19887.00	17.75	78.98	20.95	1.23	3.89	0.08	0.12
22.16	4.09	23600	4.17	6.60	2.68	19887.00	17.75	78.98	20.95	1.07	3.39	0.07	0.11
21.67	6.19	9462	4.17	6.60	2.68	19887.00	17.75	79.16	21.00	1.38	4.46	0.04	0.14
21.20	8.21	8906	4.17	6.60	2.68	19887.00	17.75	79.14	20.99	1.44	4.65	0.05	0.14
20.78	10.06	10205	4.17	6.60	2.68	19887.00	17.75	79.02	20.96	1.29	4.09	0.07	0.13
20.18	12.65	14658	4.17	6.60	2.68	19887.00	17.75	79.30	21.04	1.92	6.26	0.04	0.19
19.30	16.45	15585	4.17	6.60	2.68	19887.00	17.75	79.54	21.10	2.56	8.42	0.02	0.26
18.61	19.43	14101	4.17	6.60	2.68	19887.00	17.75	79.38	21.06	2.00	6.56	0.03	0.20
17.88	22.58	15400	4.17	6.60	2.68	19887.00	17.75	79.43	21.07	2.16	7.08	0.02	0.22
17.06	26.14	16327	4.17	6.60	2.68	19887.00	17.75	79.43	21.07	2.33	7.62	0.04	0.23
16.24	29.69	15771	4.17	6.60	2.68	19887.00	17.75	79.49	21.08	2.32	7.63	0.02	0.23
15.48	33.00	14843	4.17	6.60	2.68	19887.00	17.75	79.38	21.05	2.06	6.74	0.03	0.21
14.75	36.16	14658	4.17	6.60	2.68	19887.00	17.75	79.40	21.06	2.15	7.04	0.03	0.21
14.00	39.39	14472	4.17	6.60	2.68	19887.00	17.75	79.41	21.06	2.17	7.10	0.03	0.22
13.29	42.46	14843	4.17	6.60	2.68	19887.00	17.75	79.44	21.07	2.29	7.50	0.03	0.23
12.51	45.85	15400	4.17	6.60	2.68	19887.00	17.75	79.54	21.10	2.48	8.16	0.02	0.25
11.74	49.16	15214	4.17	6.60	2.68	19887.00	17.75	79.52	21.09	2.56	8.39	0.03	0.25
10.98	52.47	14843	4.17	6.60	2.68	19887.00	17.75	79.51	21.09	2.46	8.06	0.02	0.24
10.25	55.62	14101	4.17	6.60	2.68	19887.00	17.75	79.54	21.10	2.48	8.15	0.02	0.25
9.56	58.61	13544	4.17	6.60	2.68	19887.00	17.75	79.53	21.10	2.42	7.97	0.01	0.24
8.89	61.52	12988	4.17	6.60	2.68	19887.00	17.75	79.54	21.10	2.44	8.01	0.01	0.24
8.25	64.26	11874	4.17	6.60	2.68	19887.00	17.75	79.53	21.10	2.40	7.90	0.01	0.24
7.70	66.69	9834	4.17	6.60	2.68	19887.00	17.75	79.50	21.09	2.17	7.16	0.00	0.22

007- Appendix G- Stack Loss Efficiency Data/results (page 32 of 46)

7.27	68.55	8164	4.17	6.60	2.68	19887.00	17.75	79.38	21.06	1.73	5.71	0.01	0.17
6.87	70.24	6494	4.17	6.60	2.68	19887.00	17.75	79.30	21.03	1.64	5.38	0.02	0.16
6.61	71.37	5752	4.17	6.60	2.68	19887.00	17.75	79.11	20.98	1.23	3.95	0.05	0.12
6.30	72.75	5381	4.17	6.60	2.68	19887.00	17.75	78.93	20.94	1.31	4.12	0.10	0.13
6.07	73.72	4638	4.17	6.60	2.68	19887.00	17.75	78.75	20.89	1.31	4.01	0.15	0.13
5.83	74.77	4638	4.17	6.60	2.68	19887.00	17.75	78.72	20.88	1.42	4.34	0.17	0.14
5.61	75.74	4453	4.17	6.60	2.68	19887.00	17.75	78.80	20.90	1.48	4.59	0.15	0.15
5.38	76.70	4638	4.17	6.60	2.68	19887.00	17.75	78.74	20.89	1.50	4.60	0.17	0.15
5.14	77.75	4824	4.17	6.60	2.68	19887.00	17.75	78.73	20.88	1.53	4.72	0.17	0.15
4.90	78.80	3154	4.17	6.60	2.68	19887.00	17.75	78.65	20.86	1.61	4.90	0.20	0.16
4.82	79.13	2041	4.17	6.60	2.68	19887.00	17.75	78.82	20.91	1.33	4.13	0.13	0.13
4.69	79.69	2598	4.17	6.60	2.68	19887.00	17.75	78.87	20.92	1.39	4.33	0.12	0.14
4.56	80.26	2412	4.17	6.60	2.68	19887.00	17.75	78.89	20.93	1.40	4.37	0.12	0.14
4.45	80.74	1484	4.17	6.60	2.68	19887.00	17.75	78.91	20.93	1.36	4.28	0.11	0.14
4.41	80.90	1113	4.17	6.60	2.68	19887.00	17.75	78.93	20.94	1.37	4.32	0.11	0.14
4.34	81.23	1670	4.17	6.60	2.68	19887.00	17.75	78.94	20.94	1.40	4.40	0.11	0.14
4.24	81.63	1855	4.17	6.60	2.68	19887.00	17.75	78.96	20.94	1.41	4.44	0.10	0.14
4.15	82.04	1855	4.17	6.60	2.68	19887.00	17.75	78.96	20.94	1.36	4.29	0.10	0.14
4.06	82.44	1855	4.17	6.60	2.68	19887.00	17.75	78.97	20.95	1.36	4.29	0.09	0.14
3.96	82.84	1484	4.17	6.60	2.68	19887.00	17.75	78.95	20.94	1.29	4.07	0.09	0.13
3.91	83.09	-3494	4.17	6.60	2.68	19887.00	17.75	78.97	20.95	1.31	4.15	0.09	0.13
4.31	81.32	-3214	4.17	6.60	2.68	19887.00	17.75	78.99	20.95	1.29	4.09	0.08	0.13
4.23	81.69	1464	4.17	6.60	2.68	19887.00	17.75	79.00	20.95	1.27	4.05	0.08	0.13
4.17	81.96	1047	4.17	6.60	2.68	19887.00	17.75	79.01	20.96	1.20	3.80	0.07	0.12
4.13	82.14	1047	4.17	6.60	2.68	19887.00	17.75	79.01	20.96	1.19	3.78	0.07	0.12
4.06	82.42	1466	4.17	6.60	2.68	19887.00	17.75	79.01	20.96	1.21	3.84	0.07	0.12
3.98	82.78	2096	4.17	6.60	2.68	19887.00	17.75	78.99	20.95	1.24	3.93	0.08	0.12
3.85	83.33	1678	4.17	6.60	2.68	19887.00	17.75	79.01	20.96	1.20	3.80	0.07	0.12
3.81	83.51	1049	4.17	6.60	2.68	19887.00	17.75	79.01	20.96	1.16	3.71	0.07	0.12
3.75	83.78	1260	4.17	6.60	2.68	19887.00	17.75	79.02	20.96	1.22	3.88	0.07	0.12
3.68	84.06	1680	4.17	6.60	2.68	19887.00	17.75	79.00	20.96	1.13	3.61	0.07	0.11
3.58	84.52	1891	4.17	6.60	2.68	19887.00	17.75	79.01	20.96	1.15	3.65	0.07	0.11
3.49	84.88	1682	4.17	6.60	2.68	19887.00	17.75	79.02	20.96	1.15	3.67	0.06	0.11
3.41	85.25	1683	4.17	6.60	2.68	19887.00	17.75	79.02	20.96	1.05	3.34	0.06	0.10
3.32	85.62	1684	4.17	6.60	2.68	19887.00	17.75	79.02	20.96	1.04	3.31	0.06	0.10
3.24	85.98	1685	4.17	6.60	2.68	19887.00	17.75	79.02	20.96	1.05	3.34	0.06	0.10
3.15	86.35	1264	4.17	6.60	2.68	19887.00	17.75	79.01	20.96	1.05	3.35	0.06	0.10
3.11	86.53	1265	4.17	6.60	2.68	19887.00	17.75	79.01	20.96	1.05	3.33	0.06	0.10
3.03	86.90	1476	4.17	6.60	2.68	19887.00	17.75	79.01	20.96	1.05	3.33	0.06	0.10
2.96	87.18	1055	4.17	6.60	2.68	19887.00	17.75	79.02	20.96	1.03	3.29	0.06	0.10
2.92	87.36	1055	4.17	6.60	2.68	19887.00	17.75	79.02	20.96	1.04	3.31	0.06	0.10
2.86	87.63	1478	4.17	6.60	2.68	19887.00	17.75	79.02	20.96	0.96	3.08	0.05	0.10

007- Appendix G- Stack Loss Efficiency Data/results (page 33 of 46)

2.77	88.00	1267	4.17	6.60	2.68	19887.00	17.75	79.01	20.96	1.02	3.27	0.06	0.10
2.73	88.19	1057	4.17	6.60	2.68	19887.00	17.75	79.01	20.96	1.01	3.23	0.06	0.10
2.67	88.46	1691	4.17	6.60	2.68	19887.00	17.75	79.02	20.96	0.97	3.10	0.05	0.10
2.56	88.92	1692	4.17	6.60	2.68	19887.00	17.75	78.98	20.95	1.00	3.16	0.06	0.10
2.49	89.20	1270	4.17	6.60	2.68	19887.00	17.75	78.99	20.95	0.97	3.09	0.06	0.10
2.43	89.48	1270	4.17	6.60	2.68	19887.00	17.75	79.00	20.96	0.91	2.91	0.05	0.09
2.37	89.75	1483	4.17	6.60	2.68	19887.00	17.75	79.00	20.96	0.93	2.95	0.05	0.09
2.28	90.12	1271	4.17	6.60	2.68	19887.00	17.75	79.00	20.96	0.96	3.05	0.05	0.10
2.24	90.31	848	4.17	6.60	2.68	19887.00	17.75	79.00	20.96	0.94	2.98	0.05	0.09
2.20	90.49	1484	4.17	6.60	2.68	19887.00	17.75	79.00	20.96	0.92	2.93	0.05	0.09
2.09	90.95	1485	4.17	6.60	2.68	19887.00	17.75	79.00	20.96	0.96	3.05	0.05	0.10
2.05	91.14	1061	4.17	6.60	2.68	19887.00	17.75	78.98	20.95	0.98	3.11	0.06	0.10
1.98	91.41	1274	4.17	6.60	2.68	19887.00	17.75	78.99	20.95	0.95	3.01	0.06	0.09
1.92	91.69	1274	4.17	6.60	2.68	19887.00	17.75	79.01	20.96	0.93	2.97	0.05	0.09
1.86	91.97	1062	4.17	6.60	2.68	19887.00	17.75	79.01	20.96	0.95	3.02	0.05	0.09
1.81	92.15	1275	4.17	6.60	2.68	19887.00	17.75	79.00	20.95	0.93	2.97	0.05	0.09
1.73	92.52	1701	4.17	6.60	2.68	19887.00	17.75	78.97	20.95	0.91	2.88	0.06	0.09
1.64	92.89	1276	4.17	6.60	2.68	19887.00	17.75	78.99	20.95	0.93	2.96	0.06	0.09
1.60	93.08	851	4.17	6.60	2.68	19887.00	17.75	78.99	20.95	0.92	2.93	0.06	0.09
1.56	93.26	1064	4.17	6.60	2.68	19887.00	17.75	79.00	20.95	0.89	2.84	0.05	0.09
1.49	93.54	1064	4.17	6.60	2.68	19887.00	17.75	78.99	20.95	0.90	2.86	0.05	0.09
1.45	93.73	852	4.17	6.60	2.68	19887.00	17.75	78.99	20.95	0.91	2.90	0.05	0.09
1.41	93.91	1065	4.17	6.60	2.68	19887.00	17.75	78.99	20.95	0.87	2.77	0.05	0.09
1.34	94.19	1705	4.17	6.60	2.68	19887.00	17.75	79.00	20.96	0.84	2.68	0.05	0.08
1.23	94.66	1705	4.17	6.60	2.68	19887.00	17.75	79.00	20.96	0.85	2.70	0.05	0.08
1.17	94.93	1280	4.17	6.60	2.68	19887.00	17.75	79.01	20.96	0.85	2.72	0.05	0.08
1.11	95.21	1280	4.17	6.60	2.68	19887.00	17.75	79.01	20.96	0.82	2.62	0.04	0.08
1.04	95.49	1280	4.17	6.60	2.68	19887.00	17.75	79.00	20.96	0.80	2.55	0.04	0.08
0.98	95.77	1494	4.17	6.60	2.68	19887.00	17.75	79.01	20.96	0.78	2.49	0.04	0.08
0.89	96.14	1709	4.17	6.60	2.68	19887.00	17.75	79.00	20.95	0.76	2.44	0.04	0.08
0.81	96.51	1709	4.17	6.60	2.68	19887.00	17.75	79.00	20.95	0.75	2.40	0.04	0.07
0.72	96.89	1496	4.17	6.60	2.68	19887.00	17.75	78.98	20.95	0.76	2.41	0.04	0.08
0.65	97.17	1283	4.17	6.60	2.68	19887.00	17.75	78.99	20.95	0.73	2.34	0.04	0.07
0.59	97.44	1070	4.17	6.60	2.68	19887.00	17.75	78.99	20.95	0.72	2.29	0.04	0.07
0.55	97.63	642	4.17	6.60	2.68	19887.00	17.75	78.99	20.95	0.70	2.22	0.04	0.07
0.53	97.72	642	4.17	6.60	2.68	19887.00	17.75	78.99	20.95	0.67	2.15	0.04	0.07
0.48	97.91	1498	4.17	6.60	2.68	19887.00	17.75	79.00	20.95	0.66	2.10	0.03	0.07
0.38	98.38	1713	4.17	6.60	2.68	19887.00	17.75	78.99	20.95	0.66	2.11	0.04	0.07
0.31	98.66	1071	4.17	6.60	2.68	19887.00	17.75	78.99	20.95	0.63	2.01	0.03	0.06
0.27	98.84	857	4.17	6.60	2.68	19887.00	17.75	78.99	20.95	0.60	1.92	0.03	0.06
0.22	99.03	643	4.17	6.60	2.68	19887.00	17.75	78.99	20.95	0.60	1.92	0.03	0.06
0.20	99.12	429	4.17	6.60	2.68	19887.00	17.75	79.00	20.95	0.58	1.86	0.03	0.06
0.18	99.22	643	4.17	6.60	2.68	19887.00	17.75	79.00	20.95	0.56	1.78	0.03	0.06
0.14	99.40	858	4.17	6.60	2.68	19887.00	17.75	79.00	20.95	0.54	1.74	0.02	0.05
0.09	99.59	643	4.17	6.60	2.68	19887.00	17.75	79.00	20.95	0.55	1.75	0.02	0.05
0.07	99.68	643	4.17	6.60	2.68	19887.00	17.75	79.00	20.96	0.55	1.78	0.02	0.06
0.03	99.87	1030	4.17	6.60	2.68	19887.00	17.75	79.00	20.96	0.53	1.71	0.02	0.05
-0.01	100.06	172	4.17	6.60	2.68	19887.00	17.75	79.00	20.95	0.54	1.72	0.02	0.05

007- Appendix G- Stack Loss Efficiency Data/results (page 34 of 46)

Moisture Content M_{Cwb}: 17.75

17.75
23.10
21.58

Dry kg : 23.10
CA: 50
HY: 6.6
OX: 42.9

HHV	LHV
8555.6	7943.4

35.90	159.40	5.44	0.53	756.27	32.10	11.99	330.23	1152.58	879.13	857.77	847.66	1083.84	1027.38	300.63
Moles per kg of Dry Wood						Moisture	Stack Temp	Heat Content Change - Ambient to Stack Temperature Flue Gas Constituent						Room Temp
CO_2	O_2	CO	HC	N_2	H_2O	Present	K	CO_2	O_2	CO	N_2	CH_4	H_2O	K
35.16	130.67	6.05	0.66	645.82	31.84	11.99	345.75	1697.55	1294.81	1263.36	1248.46	1596.29	1513.16	302.15
35.02	156.62	6.21	0.65	743.47	31.87	11.99	365.85	2491.04	1891.60	1843.59	1822.29	2360.97	2207.47	302.35
38.21	110.70	3.36	0.31	578.28	32.55	11.99	351.15	1919.29	1462.27	1426.34	1409.61	1808.48	1708.24	301.95
37.81	104.04	3.70	0.37	552.08	32.43	11.99	350.75	1907.23	1453.24	1417.58	1400.94	1796.77	1697.75	301.85
35.90	122.80	5.40	0.58	617.99	32.00	11.99	345.95	1709.29	1303.74	1272.06	1257.07	1607.40	1523.58	302.05
39.41	66.52	2.25	0.22	414.50	32.73	11.99	367.95	2586.90	1963.62	1913.60	1891.53	2453.52	2291.24	302.05
40.77	38.41	1.02	0.09	311.83	32.99	11.99	385.65	3307.00	2500.64	2434.61	2407.01	3157.48	2914.32	301.95
40.19	61.71	1.56	0.13	398.35	32.91	11.99	378.15	2990.90	2265.14	2206.19	2181.00	2847.94	2641.18	302.25
40.42	53.90	1.35	0.11	369.45	32.95	11.99	378.65	3014.99	2283.19	2223.72	2198.34	2871.31	2662.14	302.15
40.12	47.03	1.60	0.16	342.70	32.86	11.99	380.75	3096.31	2343.66	2282.34	2256.35	2951.21	2732.24	302.25
40.71	46.94	1.08	0.08	343.92	33.00	11.99	379.15	3042.91	2304.18	2244.13	2218.53	2898.23	2686.57	301.95
40.02	58.80	1.71	0.15	386.90	32.86	11.99	373.55	2781.89	2108.68	2054.25	2030.70	2644.90	2459.42	302.85
40.14	54.52	1.59	0.14	371.09	32.88	11.99	373.55	2766.56	2096.88	2042.71	2019.30	2630.72	2445.59	303.25
40.16	53.65	1.57	0.14	367.82	32.88	11.99	373.15	2754.24	2087.77	2033.89	2010.58	2618.52	2435.05	303.15
40.25	48.42	1.49	0.14	348.27	32.89	11.99	375.45	2835.65	2148.27	2092.53	2068.60	2698.57	2505.16	303.45
40.88	41.00	0.93	0.07	321.90	33.03	11.99	379.95	3017.87	2284.08	2224.28	2198.96	2876.87	2662.71	303.45
40.59	38.62	1.18	0.11	312.16	32.95	11.99	382.35	3126.80	2365.45	2303.25	2277.08	2983.07	2757.16	303.15
40.68	42.06	1.10	0.09	325.40	32.98	11.99	380.75	3050.33	2308.25	2247.71	2222.14	2908.69	2690.73	303.45
40.88	41.09	0.93	0.07	322.21	33.03	11.99	380.45	3084.14	2334.59	2273.55	2247.65	2939.27	2721.73	302.25
40.95	43.00	0.87	0.06	329.64	33.05	11.99	378.85	2973.27	2250.87	2192.06	2167.08	2833.19	2624.19	303.45
40.95	42.57	0.87	0.06	328.03	33.05	11.99	378.25	2979.63	2256.36	2197.58	2172.50	2837.74	2630.85	302.65
40.99	43.86	0.84	0.05	332.99	33.06	11.99	376.95	2903.99	2199.42	2142.21	2117.74	2764.97	2564.58	303.25
41.17	52.94	0.69	0.02	367.75	33.13	11.99	370.05	2613.93	1982.58	1931.70	1909.49	2482.56	2312.79	303.55

007- Appendix G- Stack Loss Efficiency Data/results (page 35 of 46)

40.74	77.66	1.10	0.04	460.02	33.10	11.99	359.55	2188.84	1663.94	1622.16	1603.32	2070.57	1942.48	303.65
39.91	84.95	1.84	0.13	485.42	32.91	11.99	353.35	1956.94	1489.81	1452.92	1435.94	1846.48	1739.99	303.25
37.48	129.88	4.02	0.37	648.85	32.42	11.99	340.85	1458.03	1113.03	1086.22	1073.36	1369.07	1301.06	303.35
34.35	120.47	6.75	0.78	605.15	31.60	11.99	334.05	1205.95	922.07	900.21	889.48	1129.15	1078.38	302.95
31.24	122.82	9.47	1.17	605.99	30.83	11.99	330.45	1057.25	808.99	789.95	780.51	988.58	946.35	303.15
31.26	110.13	9.43	1.18	558.11	30.80	11.99	327.85	993.95	761.16	743.40	734.48	928.05	890.62	302.15
32.64	103.02	8.21	1.02	534.81	31.13	11.99	326.25	920.02	704.75	688.35	680.08	858.58	824.69	302.45
31.75	101.97	8.99	1.13	528.50	30.90	11.99	325.15	857.97	657.31	642.04	634.32	800.48	769.21	302.95
31.77	98.56	8.97	1.14	515.69	30.89	11.99	324.55	846.09	648.34	633.31	625.69	789.11	758.76	302.65
30.85	92.98	9.76	1.26	492.25	30.65	11.99	324.95	877.00	672.02	656.44	648.55	817.94	786.48	302.25
32.49	118.84	8.37	1.02	594.17	31.13	11.99	323.95	849.54	651.17	636.12	628.46	791.92	762.14	301.95
33.52	112.01	7.46	0.90	571.04	31.37	11.99	323.25	822.30	630.38	615.84	608.42	766.30	737.85	301.95
33.90	110.90	7.13	0.85	567.83	31.47	11.99	322.65	802.78	615.52	601.34	594.09	747.91	720.49	301.85
34.13	114.41	6.93	0.82	581.69	31.53	11.99	319.75	678.61	520.62	508.70	502.55	631.56	609.51	302.15
34.44	113.00	6.65	0.78	577.17	31.61	11.99	319.75	674.78	517.67	505.81	499.70	628.02	606.05	302.25
34.64	110.55	6.48	0.76	568.44	31.65	11.99	320.05	709.41	544.27	531.81	525.38	660.17	637.21	301.65
35.02	109.19	6.15	0.71	564.30	31.74	11.99	320.65	725.05	556.17	543.41	536.85	674.94	651.10	301.85
34.96	114.33	6.21	0.71	583.53	31.74	11.99	320.25	698.02	535.45	523.18	516.85	649.76	626.85	302.15
35.11	114.59	6.07	0.69	584.93	31.78	11.99	320.25	698.02	535.45	523.18	516.85	649.76	626.85	302.15
34.76	122.88	6.39	0.73	615.34	31.72	11.99	320.95	732.87	562.12	549.22	542.58	682.33	658.05	301.95
35.06	119.81	6.12	0.69	604.51	31.78	11.99	318.85	685.81	526.37	514.38	508.15	637.74	616.34	301.05
35.38	122.53	5.85	0.65	615.62	31.87	11.99	319.95	705.52	541.30	528.92	522.52	656.53	633.74	301.65
35.49	124.40	5.76	0.63	622.97	31.90	11.99	320.15	717.12	550.18	537.59	531.09	667.34	644.13	301.55
35.74	135.21	5.55	0.58	664.47	32.00	11.99	320.05	709.41	544.27	531.81	525.38	660.17	637.21	301.65
35.70	136.30	5.58	0.59	668.48	31.99	11.99	319.45	686.12	526.47	514.44	508.21	638.34	616.40	301.65
35.71	133.43	5.58	0.59	657.64	31.98	11.99	318.65	658.91	505.70	494.17	488.18	612.81	592.11	301.55
35.39	129.31	5.84	0.64	641.26	31.89	11.99	318.45	666.47	511.56	499.92	493.86	619.68	599.01	301.15
35.74	135.21	5.55	0.58	664.47	32.00	11.99	319.75	709.25	544.22	531.78	525.35	659.86	637.18	301.35
35.77	140.02	5.53	0.57	682.73	32.02	11.99	318.45	651.16	499.77	488.38	482.46	605.54	585.18	301.55
35.94	132.02	5.37	0.56	652.92	32.04	11.99	318.65	678.05	520.44	508.59	502.43	630.48	609.40	301.05
35.52	144.71	5.76	0.60	699.78	31.97	11.99	319.45	705.26	541.22	528.86	522.46	656.01	633.69	301.15
35.68	142.73	5.61	0.58	692.72	32.00	11.99	317.95	639.43	490.84	479.67	473.86	594.47	574.76	301.35
35.91	141.95	5.42	0.55	690.34	32.06	11.99	318.45	674.12	517.46	505.69	499.56	626.75	605.93	300.95
35.77	159.87	5.56	0.55	757.71	32.07	11.99	318.75	670.45	514.56	502.83	496.74	623.51	602.50	301.35
35.71	161.76	5.61	0.55	764.70	32.06	11.99	317.45	650.67	499.61	488.28	482.36	604.60	585.08	300.55
35.77	159.87	5.56	0.55	757.71	32.07	11.99	318.55	685.65	526.33	514.35	508.12	637.44	616.31	300.75
35.57	159.40	5.74	0.57	755.39	32.02	11.99	317.35	650.62	499.60	488.27	482.35	604.50	585.07	300.45
35.65	160.34	5.67	0.56	759.15	32.04	11.99	318.45	681.78	523.36	511.45	505.26	633.81	612.84	300.75
35.65	160.34	5.67	0.56	759.15	32.04	11.99	317.25	650.57	499.58	488.26	482.34	604.41	585.06	300.35
35.78	163.21	5.56	0.54	770.34	32.08	11.99	318.35	685.55	526.29	514.33	508.09	637.24	616.29	300.55
35.82	161.77	5.52	0.54	765.00	32.09	11.99	317.35	654.44	502.55	491.16	485.19	608.03	588.53	300.35
35.84	177.19	5.52	0.51	823.32	32.14	11.99	317.65	646.94	496.70	485.42	479.53	601.26	581.64	300.85

007- Appendix G- Stack Loss Efficiency Data/results (page 36 of 46)

35.63	164.66	5.69	0.56	775.44	32.05	11.99	318.45	697.08	535.16	522.99	516.65	647.93	626.67	300.35
35.57	166.64	5.75	0.56	782.77	32.04	11.99	317.35	662.09	508.44	496.93	490.89	615.09	595.44	300.15
35.75	176.08	5.60	0.53	818.91	32.11	11.99	317.75	673.77	517.35	505.62	499.48	626.06	605.86	300.25
34.88	170.68	6.35	0.64	796.22	31.88	11.99	318.55	712.43	546.97	534.54	528.06	662.15	640.51	300.05
35.17	176.03	6.10	0.60	817.20	31.97	11.99	317.35	658.27	505.50	494.04	488.04	611.56	591.99	300.25
35.25	190.00	6.06	0.57	870.17	32.02	11.99	317.05	646.65	496.61	485.36	479.47	600.69	581.59	300.25
35.35	186.36	5.96	0.56	856.67	32.04	11.99	317.75	677.59	520.30	508.50	502.33	629.59	609.31	300.15
35.32	178.81	5.97	0.58	828.10	32.01	11.99	317.05	665.77	511.35	499.78	493.71	618.33	598.87	299.75
35.30	183.97	6.01	0.57	847.53	32.02	11.99	316.45	634.88	487.67	476.65	470.86	589.55	571.16	299.95
35.30	188.16	6.01	0.57	863.37	32.03	11.99	316.85	646.55	496.58	485.34	479.45	600.50	581.57	300.05
35.31	179.37	5.99	0.58	830.18	32.01	11.99	317.45	688.91	529.10	517.12	510.84	639.87	619.65	299.55
34.78	173.83	6.44	0.65	807.87	31.86	11.99	316.45	642.53	493.57	482.42	476.55	596.60	578.07	299.75
35.00	181.62	6.26	0.61	837.87	31.94	11.99	316.45	634.88	487.67	476.65	470.86	589.55	571.16	299.95
35.38	185.17	5.93	0.56	852.26	32.05	11.99	317.45	685.09	526.15	514.24	507.99	636.35	616.20	299.65
35.48	181.67	5.84	0.55	839.30	32.06	11.99	316.85	658.02	505.42	493.99	487.99	611.08	591.94	299.75
35.26	185.15	6.04	0.58	851.89	32.01	11.99	316.05	619.40	475.82	465.08	459.42	575.08	557.30	299.95
34.47	191.14	6.74	0.67	872.45	31.83	11.99	317.05	665.77	511.35	499.78	493.71	618.33	598.87	299.75
34.90	185.11	6.36	0.62	850.79	31.92	11.99	317.65	696.66	535.03	522.91	516.56	647.12	626.59	299.55
34.95	187.51	6.31	0.61	860.00	31.94	11.99	316.75	661.79	508.35	496.87	490.83	614.51	595.39	299.55
35.09	195.69	6.21	0.58	891.25	32.00	11.99	316.75	654.15	502.46	491.10	485.13	607.46	588.47	299.75
34.89	193.73	6.37	0.61	883.32	31.95	11.99	317.75	696.71	535.04	522.92	516.57	647.22	626.60	299.65
35.11	190.60	6.18	0.59	872.08	31.99	11.99	317.45	704.20	540.89	528.66	522.24	653.97	633.48	299.15
34.94	200.98	6.34	0.59	910.86	31.98	11.99	316.85	673.31	517.21	505.53	499.38	625.18	605.77	299.35
35.22	210.21	6.11	0.55	946.44	32.07	11.99	317.05	673.41	517.24	505.55	499.41	625.38	605.79	299.55
35.28	208.04	6.06	0.54	938.39	32.08	11.99	317.75	712.00	546.83	534.46	527.97	661.32	640.42	299.25
35.31	206.61	6.02	0.54	933.10	32.09	11.99	316.95	692.47	531.96	519.96	513.64	642.89	623.06	298.95
35.34	216.23	6.01	0.52	969.52	32.12	11.99	316.25	661.54	508.27	496.82	490.77	614.03	595.34	299.05
35.17	223.30	6.18	0.53	995.77	32.10	11.99	317.05	715.44	549.66	537.27	530.73	664.11	643.80	298.45
35.31	229.14	6.06	0.51	1018.21	32.15	11.99	317.55	742.45	570.37	557.50	550.73	689.27	668.05	298.25
34.87	235.09	6.45	0.56	1039.54	32.06	11.99	317.75	757.84	582.20	569.06	562.14	703.55	681.90	298.05
34.91	239.60	6.42	0.54	1056.68	32.08	11.99	317.55	753.91	579.21	566.15	559.27	699.82	678.42	297.95
34.51	237.67	6.77	0.60	1048.34	31.97	11.99	317.25	753.74	579.16	566.12	559.23	699.49	678.38	297.65
34.60	246.05	6.70	0.57	1080.26	32.02	11.99	316.85	757.33	582.04	568.96	562.03	702.56	681.80	297.15
34.59	252.91	6.72	0.57	1106.12	32.03	11.99	316.55	734.26	564.31	551.63	544.91	681.16	661.03	297.45
34.53	262.20	6.79	0.56	1141.06	32.04	11.99	316.25	737.91	567.20	554.48	547.72	684.35	664.45	297.05
34.63	272.16	6.72	0.53	1178.96	32.10	11.99	316.15	749.30	576.02	563.12	556.25	694.77	674.81	296.65
34.61	280.34	6.74	0.53	1209.83	32.12	11.99	316.15	749.30	576.02	563.12	556.25	694.77	674.81	296.65
34.32	277.85	6.99	0.56	1199.64	32.04	11.99	315.85	722.43	555.35	542.91	536.29	669.89	650.59	297.05
34.49	294.05	6.87	0.52	1261.29	32.12	11.99	316.15	741.67	570.13	557.35	550.56	687.76	667.90	296.85
34.32	310.39	7.03	0.52	1322.60	32.13	11.99	316.35	753.23	579.00	566.02	559.12	698.50	678.28	296.75
34.32	310.39	7.03	0.52	1322.60	32.13	11.99	315.85	749.13	575.97	563.09	556.21	694.45	674.77	296.35
34.46	322.34	6.93	0.49	1368.10	32.19	11.99	315.35	722.16	555.27	542.86	536.23	669.36	650.53	296.55
34.35	338.30	7.05	0.48	1428.09	32.21	11.99	314.45	668.28	513.89	502.41	496.28	619.32	602.07	297.05
34.36	348.62	7.06	0.46	1467.09	32.24	11.99	313.95	633.69	487.30	476.42	470.60	587.24	570.92	297.45
34.42	345.16	6.99	0.46	1454.19	32.25	11.99	314.05	629.92	484.37	473.55	467.77	583.82	567.48	297.65
34.52	340.08	6.90	0.45	1435.26	32.26	11.99	313.85	629.82	484.34	473.53	467.74	583.63	567.46	297.45
34.43	355.86	7.00	0.44	1494.65	32.28	11.99	313.25	595.19	457.74	447.53	442.06	551.47	536.31	297.75
34.29	352.14	7.12	0.47	1480.22	32.23	11.99	313.15	579.88	445.94	435.99	430.66	537.33	522.47	298.05

007- Appendix G- Stack Loss Efficiency Data/results (page 37 of 46)

SUMS							AVERAGE	SUMS						
4871.82	12014.44	174403.00	58922.80	53403.48	163271.44	60960.63	4671.22	96423.59	28390.69	68032.9	363140.9	28511.1	2140.5	121.4
Energy Losses (kJ/kg of Dry Fuel)							Total							
Flue Gas Constituent							Loss	Total	Chemical	Sensible and	Total	Chem	Grams Produced	
CO_2	O_2	CO	N_2	CH_4	H_2O Comb	H_2O Fuel MC	Rate	Loss	Loss 1	Latent Loss	Output	Loss 2	CO	HC
59.69	169.20	1719.94	806.28	592.06	1448.06	545.30	5340.52	0.00	0	0.00	0	0	0.00	0.00
87.23	296.26	1769.62	1354.82	576.54	1471.82	553.62	6109.92	7250.82	2769	4481.97	16350	2769	206.44	12.27
73.33	161.87	955.79	815.14	274.81	1486.78	547.64	4315.37	2053.30	583	1470.31	7409	583	44.77	2.35
72.12	151.19	1051.59	773.43	327.55	1481.04	547.51	4404.42	1972.40	615	1357.43	6933	615	46.36	2.63
61.36	160.10	1534.00	776.85	519.13	1455.83	545.42	5052.70	2592.69	1050	1543.17	7612	1050	77.53	4.78
101.95	130.63	640.34	784.05	194.60	1514.09	554.63	3920.28	2889.40	612	2277.59	11768	612	46.38	2.57
134.83	96.05	290.93	750.58	76.61	1546.88	562.10	3457.98	2709.98	286	2424.10	12875	286	22.37	1.08
120.22	139.77	443.65	868.80	112.50	1534.12	558.82	3777.89	2678.72	392	2287.06	11422	392	30.88	1.43
121.86	123.07	384.71	812.17	96.99	1536.43	559.07	3634.31	2814.26	370	2443.81	12585	370	29.25	1.35
124.24	110.21	455.40	773.25	138.61	1534.39	559.91	3696.01	3034.45	484	2550.14	13293	484	36.70	2.04
123.89	108.17	308.53	763.00	72.50	1539.80	559.37	3475.24	2755.93	300	2455.88	13015	300	24.02	1.03
111.33	123.99	486.29	785.69	135.95	1525.70	556.64	3725.58	2780.66	462	2319.16	12062	462	35.65	1.82
111.06	114.33	452.91	749.33	126.96	1526.18	556.48	3637.26	2680.81	425	2256.08	11977	425	32.79	1.68
110.61	112.01	448.88	739.53	126.39	1525.89	556.35	3619.66	2634.07	416	2218.03	11838	416	32.09	1.65
114.13	104.01	424.96	720.44	123.00	1528.55	557.19	3572.28	2666.25	406	2259.87	12177	406	31.15	1.65
123.36	93.66	265.49	707.86	61.53	1540.15	559.08	3351.13	2594.98	251	2343.50	12805	251	20.18	0.85
126.92	91.36	335.98	710.82	96.68	1539.60	560.21	3461.57	2648.20	329	2319.53	12566	329	25.23	1.32
124.08	97.09	315.18	723.08	82.43	1538.90	559.42	3440.17	2567.64	295	2272.94	12275	295	23.09	1.10
126.07	95.92	265.80	724.23	61.53	1542.10	559.79	3375.43	2393.36	230	2162.91	11708	230	18.50	0.78
121.75	96.79	248.22	714.36	50.91	1539.99	558.62	3330.63	2268.37	202	2066.06	11276	202	16.60	0.62
122.02	96.06	247.00	712.64	50.97	1540.20	558.70	3327.58	2173.16	193	1979.91	10815	193	15.84	0.60
119.03	96.47	238.76	705.18	45.44	1538.59	557.90	3301.36	1971.23	169	1802.69	9903	169	14.00	0.49
107.61	104.95	197.69	702.21	14.08	1533.51	554.89	3214.94	1589.69	104	1485.66	8244	104	9.61	0.12
89.17	129.21	313.38	737.55	31.36	1519.46	550.45	3370.60	1383.64	141	1242.89	6780	141	12.66	0.23
78.10	126.56	522.35	697.04	115.49	1504.14	548.02	3591.69	1172.82	207	965.49	5321	207	16.79	0.68
54.65	144.56	1141.75	696.45	332.08	1467.69	542.76	4379.94	1266.76	425	841.91	4485	425	32.55	1.72
41.42	111.08	1915.44	538.27	695.58	1423.72	540.09	5265.60	1424.66	705	720.10	3956	705	51.11	3.38
33.03	99.36	2686.05	472.98	1041.07	1384.71	538.50	6255.71	1459.09	867	591.78	3179	867	61.81	4.36
31.07	83.83	2675.30	409.92	1054.32	1381.65	537.83	6173.93	1440.01	868	572.00	3198	868	61.58	4.42
30.03	72.60	2329.62	363.72	908.14	1394.31	537.04	5635.46	1261.84	724	538.34	3191	724	51.49	3.65
27.24	67.02	2551.08	335.24	1009.96	1382.35	536.38	5909.27	1378.28	829	549.26	3260	829	58.74	4.23
26.88	63.90	2545.06	322.66	1012.09	1381.81	536.25	5888.65	1428.41	861	567.15	3396	861	60.95	4.41
27.06	62.49	2769.33	319.24	1121.41	1371.69	536.59	6207.80	984.58	616	368.68	2170	616	43.36	3.19
27.60	77.38	2373.38	373.41	905.66	1392.61	536.29	5686.34	583.57	336	247.68	1457	336	24.05	1.67
27.57	70.61	2115.00	347.43	798.46	1402.61	536.00	5297.67	691.95	380	312.10	1906	380	27.27	1.87
27.21	68.26	2020.76	337.34	757.42	1406.18	535.80	5152.97	624.98	336	288.62	1787	336	24.20	1.65
23.16	59.56	1964.47	292.33	727.16	1405.70	534.46	5006.85	373.70	201	173.10	1111	201	14.48	0.97
23.24	58.49	1886.55	288.41	693.90	1408.92	534.42	4893.94	273.95	144	129.72	839	144	10.43	0.70

007- Appendix G- Stack Loss Efficiency Data/results (page 38 of 46)

23.24	58.49	1886.55	288.41	693.90	1408.92	534.42	4893.94	273.95	144	129.72	839	144	10.43	0.70
24.57	60.17	1837.52	298.65	675.12	1411.79	534.80	4842.61	406.62	211	195.97	1263	211	15.24	1.02
25.39	60.73	1742.63	302.94	634.07	1416.34	534.96	4717.07	440.09	221	218.70	1415	221	16.06	1.06
24.40	61.22	1760.01	301.60	634.70	1415.51	534.67	4732.11	441.49	223	218.42	1414	223	16.22	1.06
24.51	61.36	1722.02	302.32	617.13	1417.27	534.67	4679.28	436.56	218	218.66	1419	218	15.87	1.03
25.47	69.07	1812.07	333.87	646.10	1415.36	535.05	4837.00	361.02	183	177.85	1123	183	13.36	0.87
24.04	63.06	1736.22	307.18	616.19	1417.03	534.55	4698.27	-825.48	-413	-412.80	-2669	-413	-30.13	-1.94
24.96	66.32	1657.27	321.67	576.58	1421.55	534.76	4603.11	-743.95	-360.46	-383.49	-2470	-360	-26.45	-1.67
25.45	68.44	1632.25	330.85	562.58	1423.28	534.88	4577.74	337.10	161.37	175.73	1127	161	11.87	0.74
25.35	73.59	1573.67	349.10	520.77	1427.25	534.80	4504.52	237.04	110.04	127.00	809	110	8.18	0.49
24.50	71.76	1583.13	339.73	523.54	1426.30	534.55	4503.50	237.09	110.74	126.36	810	111	8.23	0.50
23.53	67.47	1580.95	321.05	526.65	1425.21	534.26	4479.12	330.28	155.18	175.10	1136	155	11.51	0.70
23.59	66.15	1657.01	316.69	566.91	1421.41	534.34	4586.10	483.41	234.07	249.34	1613	187	17.25	1.07
25.35	73.58	1573.67	349.07	520.77	1427.25	534.80	4504.49	380.01	176.41	203.60	1298	265	13.11	0.79
23.29	69.98	1567.65	329.39	511.30	1426.53	534.17	4462.31	235.44	109.53	125.91	814	88	8.17	0.48
24.37	68.71	1522.57	328.04	502.20	1428.22	534.46	4408.58	279.22	128.05	151.18	980	128	9.52	0.57
25.05	78.32	1632.37	365.61	533.89	1425.82	534.75	4595.81	388.33	182.75	205.58	1292	137	13.62	0.81
22.82	70.06	1590.61	328.25	517.88	1425.54	534.05	4489.20	426.95	200.24	226.71	1464	222	14.94	0.88
24.20	73.45	1535.53	344.86	494.01	1428.92	534.42	4435.40	375.20	171.42	203.78	1307	171	12.83	0.75
23.98	82.26	1576.71	376.38	487.26	1429.49	534.38	4510.48	381.76	174.43	207.34	1301	174	13.18	0.74
23.24	80.82	1591.23	368.86	491.19	1428.54	534.17	4518.04	382.62	176.09	206.53	1302	176	13.31	0.75
24.52	84.15	1576.78	385.00	487.27	1429.93	534.55	4522.20	383.18	174.62	208.56	1302	175	13.20	0.74
23.14	79.63	1626.20	364.36	510.37	1426.62	534.17	4564.49	290.19	135.64	154.56	974	181	10.21	0.58
24.30	83.91	1607.11	383.56	500.35	1428.51	534.50	4562.25	290.21	133.85	156.36	975	89	10.10	0.57
23.19	80.10	1606.97	366.16	500.33	1427.62	534.17	4538.55	336.93	156.21	180.72	1139	178	11.78	0.67
24.53	85.90	1575.40	391.40	481.93	1430.47	534.55	4524.17	240.00	108.97	131.03	815	131	8.25	0.46
23.44	81.30	1564.33	371.18	479.00	1429.87	534.21	4483.32	237.93	108.28	129.65	817	87	8.20	0.46
23.19	88.01	1565.34	394.80	457.62	1431.78	534.13	4494.88	334.10	150.14	183.96	1144	129	11.49	0.61
24.83	88.12	1613.84	400.63	497.25	1429.27	534.67	4588.61	292.44	134.33	158.11	975	179	10.16	0.57
23.55	84.73	1628.99	384.25	501.35	1427.85	534.30	4585.02	243.62	113.02	130.60	813	90	8.55	0.48
24.09	91.10	1586.52	409.03	468.74	1431.45	534.42	4545.35	386.60	174.54	212.06	1305	131	13.33	0.72
24.85	93.35	1800.74	420.45	573.30	1422.09	534.84	4869.63	414.34	201.68	212.67	1278	252	15.13	0.88
23.15	88.98	1730.28	398.83	533.91	1424.48	534.25	4733.90	302.25	144.35	157.90	968	144	10.91	0.61
22.79	94.36	1717.35	417.22	508.29	1426.71	534.13	4720.85	301.54	141.95	159.59	969	142	10.83	0.58
23.95	96.96	1690.76	430.33	501.37	1428.30	534.46	4706.13	350.85	163.18	187.68	1132	140	12.45	0.67
23.52	91.43	1693.82	408.84	513.46	1426.75	534.34	4692.16	299.94	140.88	159.05	971	188	10.69	0.59
22.41	89.72	1703.01	399.07	510.35	1426.17	534.00	4684.73	199.72	94.22	105.49	648	94	7.17	0.39
22.82	93.44	1703.88	413.94	504.79	1427.06	534.13	4700.06	350.80	164.61	186.20	1134	94	12.56	0.68
24.32	94.90	1698.18	424.09	514.60	1427.30	534.59	4717.99	352.23	164.94	187.29	1132	236	12.52	0.69
22.35	85.80	1826.84	385.00	580.76	1419.35	534.09	4854.19	258.99	128.27	130.72	802	103	9.63	0.56
22.22	88.57	1774.08	394.52	545.86	1422.62	534.00	4781.87	306.25	148.36	157.89	967	148	11.22	0.63
24.24	97.42	1682.07	432.94	499.11	1428.74	534.54	4699.07	301.06	139.53	161.54	973	139	10.64	0.57
23.35	91.82	1656.31	409.57	492.44	1428.63	534.25	4636.37	247.61	114.58	133.03	814	137	8.74	0.47

007- Appendix G- Stack Loss Efficiency Data/results (page 39 of 46)

21.84	88.10	1711.72	391.38	512.65	1425.50	533.84	4685.03	300.38	142.42	157.97	975	95	10.84	0.59
22.95	97.74	1910.54	430.74	594.10	1418.68	534.34	5009.08	428.37	213.87	214.50	1272	214	16.14	0.91
24.31	99.04	1801.80	439.48	553.36	1423.64	534.67	4876.31	312.88	150.87	162.00	963	201	11.42	0.64
23.13	95.32	1790.20	422.11	544.77	1423.51	534.30	4833.34	206.82	99.76	107.06	644	100	7.57	0.42
22.95	98.32	1759.10	432.37	519.12	1425.85	534.21	4791.93	256.39	121.71	134.68	808	97	9.30	0.50
24.31	103.65	1807.24	456.30	543.62	1424.62	534.67	4894.41	261.94	125.61	136.32	802	151	9.55	0.52
24.72	103.09	1752.80	455.43	523.39	1426.87	534.75	4821.06	206.47	97.33	109.15	645	97	7.41	0.40
23.53	103.95	1798.00	454.87	529.20	1425.40	534.42	4869.37	260.75	124.43	136.32	804	100	9.51	0.51
23.72	108.73	1732.08	472.66	486.30	1429.69	534.42	4787.59	410.37	189.85	220.51	1294	142	14.66	0.75
25.12	113.76	1717.49	495.44	482.71	1431.16	534.84	4800.52	411.62	188.35	223.27	1294	235	14.54	0.74
24.45	109.91	1707.70	479.27	480.32	1430.84	534.63	4767.14	306.71	140.55	166.16	973	141	10.85	0.56
23.38	109.91	1704.58	475.82	465.33	1431.45	534.29	4744.76	305.38	139.45	165.94	975	139	10.84	0.54
25.16	122.74	1751.08	528.49	476.28	1431.92	534.88	4870.54	313.59	143.17	170.42	967	143	11.13	0.55
26.22	130.70	1717.46	560.75	452.75	1435.05	535.17	4858.09	365.06	162.80	202.26	1129	140	12.74	0.61
26.43	136.87	1828.46	584.37	494.54	1431.31	535.33	5037.30	432.78	199.23	233.55	1276	199	15.51	0.76
26.32	138.78	1820.60	590.96	484.60	1432.19	535.29	5028.74	432.24	197.80	234.45	1277	198	15.45	0.75
26.01	137.65	1919.47	586.27	532.08	1427.43	535.29	5164.19	388.55	184.13	204.42	1108	210	14.26	0.72
26.20	143.21	1900.23	607.14	511.49	1429.61	535.33	5153.22	332.47	155.32	177.14	951	155	12.11	0.59
25.40	142.72	1905.88	602.74	504.38	1429.65	535.08	5145.84	276.74	129.40	147.34	793	155	10.12	0.49
25.48	148.72	1925.15	624.98	499.93	1430.21	535.12	5189.59	167.49	78.13	89.36	474	104	6.14	0.29
25.94	156.77	1904.39	655.80	476.40	1432.90	535.25	5187.45	167.46	76.72	90.74	475	51	6.07	0.28
25.93	161.48	1910.80	672.97	467.72	1433.77	535.25	5207.91	392.41	178.91	213.51	1106	102	14.22	0.63
24.80	154.30	1980.92	643.36	503.04	1429.45	534.96	5270.82	454.02	213.60	240.41	1259	267	16.85	0.78
25.58	167.65	1946.80	694.41	464.61	1433.86	535.16	5268.08	283.72	129.65	154.08	787	156	10.35	0.45
25.85	179.72	1994.07	739.50	462.83	1434.37	535.29	5371.63	231.50	105.70	125.80	626	106	8.49	0.36
25.71	178.78	1994.05	735.65	462.83	1434.26	535.25	5366.52	173.49	79.29	94.20	469	106	6.37	0.27
24.89	178.98	1964.14	733.61	432.42	1436.53	534.96	5305.53	114.36	51.57	62.79	314	52	4.18	0.17
22.95	173.85	1998.75	708.73	425.59	1435.65	534.38	5299.88	171.39	78.28	93.12	472	52	6.38	0.25
21.77	169.88	2000.46	690.41	411.82	1436.02	534.00	5264.36	227.03	103.87	123.15	631	104	8.52	0.32
21.68	167.18	1982.82	680.22	408.74	1436.22	533.96	5230.82	169.21	77.25	91.96	474	103	6.34	0.24
21.74	164.71	1956.97	671.34	404.23	1436.67	533.96	5189.62	167.92	76.29	91.63	476	51	6.25	0.23
20.49	162.89	1984.13	660.73	394.25	1436.66	533.59	5192.73	268.87	122.97	145.90	761	102	10.15	0.37
19.88	157.03	2018.10	637.47	414.92	1434.14	533.42	5214.98	45.00	20.97	24.04	127	105	1.72	0.06

007- Appendix G- Stack Loss Efficiency Data/results (page 40 of 46)

SBI Laboratories, Inc.

Manufacturer: SBI
Model: Max Caddy
Date: 01-13-10
Run: 2
Control #: 245/20712-0000121
Test Duration: 1120
Output Category: 1

Technicians: _____

Test Results in Accordance with CSA B415.1-10

	HHV Basis	LHV Basis
Overall Efficiency	79.0%	85.1%
Combustion Efficiency	93.8%	93.8%
Heat Transfer Efficiency	84%	90.7%

Output Rate (kJ/h)	19 438	18 439	**(Btu/h)**
Burn Rate (kg/h)	1.24	2.73	**(lb/h)**
Input (kJ/h)	24 610	23 346	**(Btu/h)**

Test Load Weight (dry kg)	23.10	50.91	**dry lb**
MC wet (%)	17.75		
MC dry (%)	21.58		
Particulate (g)	120.02		
CO (g)	2 141		
Test Duration (h)	18.67		

Emissions	**Particulate**	**CO**
g/MJ Output	0.33	5.90
g/kg Dry Fuel	5.20	92.66
g/h	6.43	114.67
lb/MM Btu Output	0.77	13.71

Air/Fuel Ratio (A/F)	18.92

VERSION: **2.4** **2010-04-15**

007- Appendix G- Stack Loss Efficiency Data/results (page 41 of 46)

VERSION: 2.4 2010-04-15

Manufacturer: SBI
Model: Max Caddy
Date: 2010-01-14
Run: 3
Control #: 3198245/20712-0000121
Test Duration: 420
Output Category: 3

Appliance Type: Non-Cat (Cat, Non-Cat, Pellet)

Temp. Units F (F or C)
Weight Units lb (kg or lb)

Default Fuel Values

	D. Fir	Oak
HHV (kJ/kg)	19 810	19 887
%C	48.73	50
%H	6.87	6.6
%O	43.9	42.9
%Ash	0.5	0.5

Fuel Data

	D. Fir	
HHV	19 887	kJ/kg
%C	50	
%H	6.6	
%O	42.9	
%Ash	0.5	

Wood Moisture (% wet): 18.12
Load Weight (lb wet): 48.25
Burn Rate (dry kg/h): 2.56
Total Particulate Emissions: 126.34 g

Note 1: For other fuels, use the heating value and fuel composition determined by analysis of fuel sample in accordance with Clause 9.2.

Note 2: In cases where the "Fuel Weight Remaining" is the same for three or more readings in a row, a "divide by zero error" will occur in the calculation sheet. In such cases, adjust the weight values by interpolation between the first occurence and the next reading showing a decrease in weight.

	Averages	0.56	5.09	14.72	205.87	83.10
					Temp. (ºF)	
Elapsed Time (min)	Fuel Weight Remaining (lb)	Flue Gas Composition (%) CO	CO_2	O_2	Flue Gas	Room Temp
0	48.25	0.45	4.45	15.29	237.2	82.2
10	43.12	0.48	14.48	4.85	449.2	83.3
20	40.42	0.79	4.93	13.77	365.4	84.0
30	38.12	0.49	7.16	13.13	330.3	84.4
40	35.77	0.86	5.31	13.41	322.3	83.1
50	33.67	0.75	5.94	12.75	312.3	81.5
60	31.47	0.46	6.98	12.87	209.8	82.9
70	29.42	0.45	8.67	10.70	222.1	81.5
80	27.32	0.39	9.22	10.32	229.1	82.8
90	25.02	0.53	9.75	9.61	235.9	83.1
100	22.97	0.35	9.25	10.48	228.9	82.6
110	21.07	0.30	8.79	11.29	221.7	82.2
120	19.17	0.37	9.06	10.87	227.8	84.9
130	17.42	0.27	8.67	11.27	218.5	83.8
140	16.02	0.21	7.54	12.82	200.1	83.5
150	14.72	0.24	7.21	13.15	188.8	84.0
160	13.67	0.54	6.20	13.70	178.7	83.7
170	12.47	1.06	4.54	14.42	161.4	83.7
180	11.52	1.00	4.44	14.73	156.6	83.3
190	10.62	0.94	4.88	14.70	153.7	82.9
200	9.72	0.75	5.43	14.21	155.8	83.3
210	8.97	1.07	4.01	15.42	149.0	83.3
220	8.37	1.04	3.75	15.66	142.9	82.6

007- Appendix G- Stack Loss Efficiency Data/results (page 42 of 46)

230	7.82	1.04	3.72	15.73	143.2	84.0
240	7.22	0.87	3.93	15.99	153.9	83.1
250	6.62	0.82	3.68	16.34	153.0	84.6
260	6.02	0.80	3.73	16.36	152.4	85.3
270	5.52	0.81	3.62	16.31	153.3	83.5
280	5.02	0.49	3.34	16.69	160.7	82.6
290	4.62	0.45	3.31	16.77	160.9	83.7
300	4.22	0.40	3.26	16.79	161.6	83.7
310	3.82	0.43	3.06	16.91	193.8	83.8
320	3.37	0.43	2.86	17.18	190.9	82.9
330	2.97	0.45	2.71	17.33	190.2	83.7
340	2.57	0.42	2.74	17.35	186.8	84.0
350	2.27	0.41	2.49	17.69	183.2	83.1
360	1.92	0.40	2.49	17.69	203.2	82.9
370	1.57	0.37	2.35	17.84	201.0	81.9
380	1.27	0.38	2.28	17.95	198.0	81.5
390	0.92	0.38	2.25	18.00	195.8	81.9
400	0.57	0.37	2.20	18.09	192.9	81.9
410	0.27	0.34	2.19	18.13	191.1	81.5
420	-0.03	0.32	2.18	18.23	189.0	81.1

007- Appendix G- Stack Loss Efficiency Data/results (page 43 of 46)

Manufacturer: SBI
Model: Max Caddy
Date: 01-14-10
Run: 3
Control #: 3245/20712-0000121
Test Duration: 420 min

	HHV	LHV
Eff	74.56%	80.31%
Comb Eff	93.14%	93.14%
HT Eff	80.06%	86.23%
Output	37 972	kJ/h
Burn Rate	2.56	kg/h
Grams CO	1 822	g
Input	50 925	kJ/h
MC wet	18.12	

Note: In the "Input data", "Calc. % O_2", "Fuel Properties", and "Mass Balance" columns, [e], [d], [g], [a], [b], [c], [h], [u], [w], [j], and [k] refer to their respective variables in Clauses 13.7.3 to 13.7.5.

Ultimate CO_2
$CO_{2\text{-ult}}$ 19.80
F_0
1.050

Overall Heating Efficiency: 74.56%
Combustion Efficiency: 93.14%
Heat Transfer Efficiency: 80.06%

Air Fuel Ratio (A/F)	
Dry Molecular Weight (M_d)	29.42
Dry Moles Exhaust Gas (N_d):	609.21
Air Fuel Ratio (A/F)	17.42

%HC 1.32

Heat Output: 36 021 Btu/h 37 972 kJ/h
Heat Input: 48 308 Btu/h 50 925 kJ/h

Burn Duration: 7.00 h

Burn Rate: 5.64 lb/h 2.561 kg/h

Stack Temp: 205.1 Deg. F 96.2 Deg. C

Combustion Efficiency:
Total Input (kJ):
Total Output (kJ):
Efficiency:
Total CO (g):

Elapsed Time	Weight Remaining (kg)	% CO [e]	% CO_2 [d]	Excess Air EA	Total O_2	Calc. % O_2 [g]	Flue Gas (°C)	Room Temp (°C)	Combust Eff %	Heat Transfer %	Net Eff %	Air Fuel Ratio	Wet Wt Now Wt	% Wet Consumed x	Dry Wt. Now Wt_{dn}	% Dry Comsumed y	Total Input	Carbon /12= [a]	Hydrogen /1= [b]	Oxygen /16= [c]	Calorific Value
	INPUT DATA			Oxygen Calculation			Input Data											Fuel Properties			
	Averages	**0.56**	**5.09**	**3.32**	**20.62**	**15.24**	**96.60**	**28.39**	**91.0%**	**79.4%**	**72.2%**	**26.07**	**6.41**	**70.70**	**5.25**	**70.70**	**357365**	**4.17**	**6.60**	**2.68**	**19887.00**
0	21.89	0.45	4.45	304.1%	20.66	15.98	114.0	27.9	93.1%	77.0%	71.7%	24.5	21.89	0.00	17.93	0.00	0	4.17	6.60	2.68	19887.00
10	19.56	0.48	14.48	32.4%	20.08	5.36	231.8	28.5	97.3%	79.0%	76.9%	8.1	19.56	10.63	16.02	10.63	47875	4.17	6.60	2.68	19887.00
20	18.34	0.79	4.93	246.2%	20.61	15.29	185.2	28.9	89.0%	68.7%	61.2%	20.8	18.34	16.23	15.02	16.23	18470	4.17	6.60	2.68	19887.00
30	17.30	0.49	7.16	158.9%	20.50	13.10	165.7	29.1	95.0%	76.6%	72.8%	15.7	17.30	20.99	14.16	20.99	17177	4.17	6.60	2.68	19887.00
40	16.23	0.86	5.31	220.9%	20.59	14.85	161.3	28.4	88.8%	72.9%	64.8%	19.2	16.23	25.87	13.29	25.87	16439	4.17	6.60	2.68	19887.00
50	15.28	0.75	5.94	196.0%	20.56	14.24	155.7	27.5	91.0%	75.1%	68.4%	17.8	15.28	30.22	12.51	30.22	15885	4.17	6.60	2.68	19887.00
60	14.28	0.46	6.98	166.2%	20.51	13.30	98.8	28.3	95.2%	82.8%	78.8%	16.2	14.28	34.78	11.69	34.78	15700	4.17	6.60	2.68	19887.00
70	13.35	0.45	8.67	117.1%	20.42	11.52	105.6	27.5	96.1%	83.4%	80.2%	13.2	13.35	39.03	10.93	39.03	15330	4.17	6.60	2.68	19887.00
80	12.40	0.39	9.22	106.1%	20.39	10.97	109.5	28.2	96.8%	83.6%	80.9%	12.6	12.40	43.38	10.15	43.38	16254	4.17	6.60	2.68	19887.00
90	11.35	0.53	9.75	92.6%	20.35	10.33	113.3	28.4	95.9%	83.5%	80.1%	11.7	11.35	48.15	9.30	48.15	16069	4.17	6.60	2.68	19887.00
100	10.42	0.35	9.25	106.3%	20.39	10.96	109.4	28.1	97.2%	83.6%	81.3%	12.6	10.42	52.39	8.53	52.39	14592	4.17	6.60	2.68	19887.00
110	9.56	0.30	8.79	117.8%	20.42	11.48	105.4	27.9	97.5%	83.6%	81.6%	13.3	9.56	56.33	7.83	56.33	14037	4.17	6.60	2.68	19887.00
120	8.70	0.37	9.06	110.0%	20.40	11.15	108.8	29.4	97.0%	83.6%	81.1%	12.8	8.70	60.27	7.12	60.27	13483	4.17	6.60	2.68	19887.00
130	7.90	0.27	8.67	121.5%	20.43	11.62	103.6	28.8	97.8%	83.8%	81.9%	13.5	7.90	63.90	6.47	63.90	11636	4.17	6.60	2.68	19887.00
140	7.27	0.21	7.54	155.5%	20.49	12.85	93.4	28.6	98.2%	84.0%	82.4%	15.6	7.27	66.80	5.95	66.80	9974	4.17	6.60	2.68	19887.00
150	6.68	0.24	7.21	165.8%	20.51	13.18	87.1	28.9	97.7%	84.3%	82.4%	16.2	6.68	69.49	5.47	69.49	8681	4.17	6.60	2.68	19887.00
160	6.20	0.54	6.20	193.8%	20.55	14.08	81.5	28.7	93.7%	83.9%	78.6%	17.8	6.20	71.67	5.08	71.67	8312	4.17	6.60	2.68	19887.00
170	5.66	1.06	4.54	253.6%	20.62	15.55	71.9	28.7	84.8%	82.8%	70.2%	21.0	5.66	74.16	4.63	74.16	7942	4.17	6.60	2.68	19887.00
180	5.23	1.00	4.44	264.0%	20.63	15.69	69.2	28.5	85.3%	83.0%	70.8%	21.7	5.23	76.12	4.28	76.12	6834	4.17	6.60	2.68	19887.00
190	4.82	0.94	4.88	240.2%	20.61	15.26	67.6	28.3	87.0%	83.8%	72.9%	20.3	4.82	77.99	3.95	77.99	6649	4.17	6.60	2.68	19887.00
200	4.41	0.75	5.43	220.4%	20.58	14.78	68.8	28.5	90.3%	84.4%	76.2%	19.3	4.41	79.85	3.61	79.85	6095	4.17	6.60	2.68	19887.00
210	4.07	1.07	4.01	289.8%	20.65	16.10	65.0	28.5	83.1%	82.9%	68.9%	23.1	4.07	81.41	3.33	81.41	4987	4.17	6.60	2.68	19887.00
220	3.80	1.04	3.75	313.4%	20.66	16.39	61.6	28.1	82.7%	83.0%	68.6%	24.5	3.80	82.65	3.11	82.65	4248	4.17	6.60	2.68	19887.00
230	3.55	1.04	3.72	316.0%	20.67	16.43	61.8	28.9	82.6%	83.1%	68.6%	24.7	3.55	83.79	2.91	83.79	4248	4.17	6.60	2.68	19887.00
240	3.28	0.87	3.93	312.5%	20.66	16.30	67.7	28.4	85.6%	82.6%	70.7%	24.6	3.28	85.04	2.68	85.04	4433	4.17	6.60	2.68	19887.00
250	3.00	0.82	3.68	340.1%	20.68	16.59	67.2	29.2	85.6%	82.4%	70.6%	26.3	3.00	86.28	2.46	86.28	4433	4.17	6.60	2.68	19887.00
260	2.73	0.80	3.73	337.1%	20.68	16.55	66.9	29.6	86.1%	82.6%	71.1%	26.1	2.73	87.52	2.24	87.52	4063	4.17	6.60	2.68	19887.00
270	2.50	0.81	3.62	347.0%	20.69	16.66	67.4	28.6	85.6%	82.2%	70.3%	26.7	2.50	88.56	2.05	88.56	3694	4.17	6.60	2.68	19887.00
280	2.28	0.49	3.34	417.0%	20.72	17.13	71.5	28.1	90.4%	81.1%	73.3%	31.2	2.28	89.60	1.86	89.60	3325	4.17	6.60	2.68	19887.00
290	2.10	0.45	3.31	426.7%	20.72	17.19	71.6	28.7	91.1%	81.2%	73.9%	31.8	2.10	90.42	1.72	90.42	2955	4.17	6.60	2.68	19887.00
300	1.91	0.40	3.26	441.0%	20.73	17.27	72.0	28.7	92.0%	81.0%	74.6%	32.7	1.91	91.25	1.57	91.25	2955	4.17	6.60	2.68	19887.00
310	1.73	0.43	3.06	467.4%	20.74	17.46	89.9	28.8	90.9%	76.9%	69.9%	34.3	1.73	92.08	1.42	92.08	3140	4.17	6.60	2.68	19887.00
320	1.53	0.43	2.86	501.9%	20.75	17.68	88.3	28.3	90.4%	76.3%	69.0%	36.3	1.53	93.02	1.25	93.02	3140	4.17	6.60	2.68	19887.00
330	1.35	0.45	2.71	526.7%	20.76	17.82	87.9	28.7	89.5%	75.8%	67.8%	37.8	1.35	93.84	1.10	93.84	2955	4.17	6.60	2.68	19887.00
340	1.17	0.42	2.74	526.7%	20.76	17.81	86.0	28.9	90.3%	76.4%	69.0%	37.8	1.17	94.67	0.95	94.67	2586	4.17	6.60	2.68	19887.00
350	1.03	0.41	2.49	582.8%	20.77	18.08	84.0	28.4	89.7%	75.6%	67.8%	41.2	1.03	95.30	0.84	95.30	2401	4.17	6.60	2.68	19887.00
360	0.87	0.40	2.49	585.2%	20.77	18.08	95.1	28.3	90.0%	72.8%	65.5%	41.4	0.87	96.02	0.71	96.02	2586	4.17	6.60	2.68	19887.00
370	0.71	0.37	2.35	628.0%	20.78	18.25	93.9	27.7	90.3%	72.1%	65.1%	44.0	0.71	96.75	0.58	96.75	2401	4.17	6.60	2.68	19887.00
380	0.58	0.38	2.28	644.4%	20.79	18.32	92.2	27.5	89.8%	72.0%	64.6%	45.0	0.58	97.37	0.47	97.37	2401	4.17	6.60	2.68	19887.00
390	0.42	0.38	2.25	652.9%	20.79	18.35	91.0	27.7	89.7%	72.1%	64.7%	45.5	0.42	98.09	0.34	98.09	2586	4.17	6.60	2.68	19887.00
400	0.26	0.37	2.20	670.5%	20.79	18.41	89.4	27.7	89.8%	72.2%	64.8%	46.5	0.26	98.82	0.21	98.82	2401	4.17	6.60	2.68	19887.00
410	0.12	0.34	2.19	682.7%	20.79	18.43	88.4	27.5	90.6%	72.4%	65.6%	47.4	0.12	99.44	0.10	99.44	3103	4.17	6.60	2.68	19887.00
420	-0.01	0.32	2.18	692.1%	20.80	18.46	87.2	27.3	91.2%	72.6%	66.2%	48.0	-0.01	100.06	-0.01	100.06	887	4.17	6.60	2.68	19887.00

007- Appendix G- Stack Loss Efficiency Data/results (page 44 of 46)

Moisture Content M_{Cwb}: 18.12

93.14%
356 478 338 102 (Btu)
265 806 252 104 (Btu)
74.56%
1822.45

Moisture of Wood (wet basis): 18.12
Initial Dry Weight Wt_{do} (kg): 17.93
Moisture Content Dry 22.13

Dry kg : 17.93
CA: 50
HY: 6.6
OX: 42.9

Load Weight (kg): **21.89**

Fuel Heating	HHV	LHV		HHV	LHV
Value in kJ/kg - CV:	**19 887**	**18 464**	Btu/lb	**8555.6**	**7943.4**

18.12	79.10	20.98	1.37	4.41	0.06	0.14	36.53	147.89	4.88	0.47	714.44	32.23	12.29	369.75	2696.47	2038.26	1984.26	1961.81	2576.12	2375.19	301.54	4311.12	11536.41
Mw Moisture	Mass Balance (moles/100 mole dry flue gas)					kg Wood per 100 mole dfp	Moles per kg of Dry Wood						Moisture	Stack Temp	Heat Content Change - Ambient to Stack Temperature Flue Gas Constituent						Room Temp		
Fuel Burnt	[h]	[u]	[w]	[j]	[k]	Nk	CO_2	O_2	CO	HC	N_2	H_2O	Present	K	CO_2	O_2	CO	N_2	CH_4	H_2O	K	CO_2	O_2
18.12	79.12	20.99	1.19	3.83	0.04	0.12	37.73	135.51	3.82	0.33	670.75	32.50	12.29	387.15	3402.58	2572.57	2504.56	2476.19	3249.47	2998.03	301.05	128.37	348.60
18.12	79.68	21.14	3.60	11.78	0.06	0.36	40.37	14.94	1.34	0.17	222.14	32.83	12.29	504.95	8383.22	6182.70	5981.18	5921.41	8346.64	7147.58	301.65	338.42	92.40
18.12	78.99	20.95	1.39	4.42	0.09	0.14	35.54	110.19	5.69	0.65	569.40	31.88	12.29	458.35	6340.43	4720.85	4578.20	4530.08	6214.83	5474.59	302.05	225.32	520.18
18.12	79.25	21.02	1.85	6.00	0.05	0.18	38.94	71.22	2.66	0.27	431.03	32.62	12.29	438.85	5503.06	4113.98	3993.79	3950.94	5357.70	4777.06	302.25	214.29	293.00
18.12	78.98	20.95	1.50	4.77	0.10	0.15	35.46	99.15	5.74	0.67	527.50	31.83	12.29	434.45	5344.17	3999.49	3883.71	3841.82	5193.60	4645.73	301.55	189.52	396.53
18.12	79.07	20.97	1.63	5.20	0.09	0.16	36.71	88.02	4.64	0.53	488.70	32.11	12.29	428.85	5143.10	3854.30	3744.03	3703.37	4986.60	4479.06	300.65	188.82	339.24
18.12	79.26	21.02	1.80	5.84	0.05	0.18	39.05	74.42	2.57	0.25	443.41	32.66	12.29	371.95	2770.95	2101.77	2047.85	2024.30	2631.50	2451.86	301.45	108.21	156.42
18.12	79.36	21.05	2.20	7.17	0.05	0.22	39.61	52.63	2.06	0.21	362.54	32.74	12.29	378.75	3076.46	2330.45	2269.92	2243.98	2928.30	2717.51	300.65	121.85	122.66
18.12	79.42	21.07	2.32	7.56	0.04	0.23	40.02	47.62	1.69	0.17	344.67	32.83	12.29	382.65	3207.94	2427.62	2363.98	2337.08	3058.75	2829.92	301.35	128.37	115.61
18.12	79.39	21.06	2.48	8.07	0.06	0.25	39.49	41.85	2.15	0.24	321.51	32.68	12.29	386.45	3354.91	2536.64	2469.61	2441.62	3203.70	2956.20	301.55	132.47	106.17
18.12	79.44	21.07	2.31	7.56	0.03	0.23	40.21	47.66	1.52	0.14	345.32	32.88	12.29	382.55	3207.70	2427.54	2363.93	2337.03	3058.29	2829.88	301.25	128.99	115.70
18.12	79.43	21.07	2.19	7.17	0.02	0.22	40.38	52.73	1.38	0.11	364.93	32.94	12.29	378.55	3053.05	2312.62	2252.53	2226.79	2906.23	2696.68	301.05	123.29	121.95
18.12	79.42	21.07	2.27	7.43	0.04	0.23	40.08	49.34	1.64	0.16	351.34	32.85	12.29	381.95	3133.54	2371.06	2308.84	2282.59	2988.38	2763.90	302.55	125.60	116.99
18.12	79.44	21.07	2.15	7.06	0.02	0.21	40.52	54.31	1.26	0.10	371.25	32.97	12.29	376.75	2945.71	2231.74	2173.86	2149.00	2803.10	2602.54	301.95	119.36	121.21
18.12	79.40	21.06	1.86	6.13	0.01	0.19	40.69	69.34	1.13	0.05	428.49	33.06	12.29	366.55	2542.13	1930.35	1881.35	1859.61	2409.48	2252.68	301.75	103.44	133.86
18.12	79.37	21.05	1.79	5.88	0.01	0.18	40.45	73.96	1.35	0.08	445.31	33.01	12.29	360.25	2278.14	1732.17	1688.76	1669.13	2154.30	2022.25	302.05	92.16	128.11
18.12	79.18	21.00	1.63	5.27	0.06	0.16	38.21	86.78	3.33	0.34	487.92	32.48	12.29	354.65	2062.33	1570.07	1531.21	1513.31	1945.84	1833.75	301.85	78.80	136.26
18.12	78.85	20.92	1.37	4.28	0.13	0.14	33.19	113.67	7.75	0.94	576.47	31.29	12.29	345.05	1681.35	1282.74	1251.65	1236.88	1580.44	1499.16	301.85	55.81	145.81
18.12	78.87	20.92	1.33	4.16	0.12	0.13	33.45	118.17	7.53	0.90	594.14	31.37	12.29	342.35	1582.33	1207.98	1178.88	1164.93	1485.67	1412.06	301.65	52.92	142.75
18.12	78.92	20.93	1.42	4.48	0.11	0.14	34.45	107.71	6.64	0.78	557.23	31.60	12.29	340.75	1526.88	1166.11	1138.13	1124.64	1432.59	1363.29	301.45	52.61	125.60
18.12	79.04	20.97	1.50	4.79	0.08	0.15	36.30	98.80	5.01	0.57	528.35	32.04	12.29	341.95	1566.55	1196.03	1167.25	1153.43	1470.62	1398.14	301.65	56.86	118.17
18.12	78.82	20.91	1.25	3.87	0.13	0.12	32.24	129.47	8.60	1.03	633.68	31.10	12.29	338.15	1416.82	1082.63	1056.80	1044.24	1328.07	1265.91	301.65	45.68	140.17
18.12	78.82	20.91	1.18	3.64	0.12	0.12	31.96	139.72	8.86	1.05	671.68	31.06	12.29	334.75	1298.53	993.07	969.58	958.02	1215.35	1161.50	301.25	41.50	138.75
18.12	78.81	20.91	1.17	3.62	0.12	0.12	31.90	140.85	8.92	1.06	675.80	31.04	12.29	334.95	1275.75	975.44	952.31	940.96	1194.50	1140.79	302.05	40.69	137.39
18.12	78.90	20.93	1.18	3.68	0.10	0.12	33.59	139.31	7.44	0.85	674.38	31.47	12.29	340.85	1526.99	1166.14	1138.16	1124.67	1432.81	1363.31	301.55	51.29	162.46
18.12	78.91	20.93	1.10	3.45	0.09	0.11	33.56	151.31	7.48	0.84	719.63	31.49	12.29	340.35	1476.65	1127.62	1100.54	1087.50	1385.73	1318.25	302.35	49.56	170.62
18.12	78.92	20.93	1.11	3.48	0.09	0.11	33.82	150.04	7.25	0.81	715.50	31.55	12.29	340.05	1449.50	1106.86	1080.28	1067.48	1360.31	1293.97	302.75	49.02	166.08
18.12	78.91	20.93	1.08	3.40	0.09	0.11	33.54	154.35	7.50	0.84	731.03	31.49	12.29	340.55	1507.51	1151.29	1123.67	1110.34	1414.47	1345.95	301.75	50.56	177.70
18.12	79.04	20.96	0.93	2.98	0.04	0.09	36.11	185.25	5.30	0.47	854.47	32.23	12.29	344.65	1688.50	1288.48	1257.32	1242.47	1586.54	1505.97	301.25	60.97	238.69
18.12	79.05	20.97	0.91	2.93	0.04	0.09	36.50	189.55	4.96	0.41	871.72	32.34	12.29	344.75	1669.48	1273.77	1242.92	1228.25	1569.10	1488.71	301.85	60.94	241.44
18.12	79.07	20.97	0.89	2.86	0.03	0.09	36.99	195.98	4.54	0.34	897.29	32.48	12.29	345.15	1685.30	1285.73	1254.56	1239.75	1584.22	1502.64	301.85	62.35	251.97
18.12	79.05	20.97	0.85	2.72	0.03	0.08	36.36	207.52	5.11	0.41	939.26	32.35	12.29	363.05	2394.05	1819.22	1773.37	1752.81	2266.26	2123.48	301.95	87.05	377.53
18.12	79.03	20.96	0.80	2.56	0.03	0.08	36.03	222.69	5.42	0.43	995.73	32.31	12.29	361.45	2349.12	1785.90	1741.09	1720.86	2221.93	2084.90	301.45	84.64	397.71
18.12	79.02	20.96	0.77	2.46	0.04	0.08	35.50	233.50	5.90	0.48	1035.17	32.21	12.29	361.05	2317.80	1762.09	1717.87	1697.91	2192.31	2057.10	301.85	82.29	411.45
18.12	79.03	20.96	0.77	2.46	0.03	0.08	35.94	233.62	5.51	0.42	1036.76	32.32	12.29	359.15	2234.17	1699.15	1656.66	1637.38	2111.82	1983.85	302.05	80.31	396.95
18.12	79.02	20.96	0.70	2.26	0.03	0.07	35.58	258.35	5.86	0.43	1129.27	32.30	12.29	357.15	2173.47	1653.89	1612.75	1593.94	2052.45	1931.34	301.55	77.34	427.28
18.12	79.03	20.96	0.70	2.25	0.03	0.07	35.72	259.44	5.74	0.41	1133.76	32.34	12.29	368.25	2621.94	1990.35	1939.68	1917.30	2486.47	2322.48	301.45	93.66	516.39
18.12	79.03	20.96	0.66	2.12	0.02	0.07	35.86	278.46	5.65	0.37	1205.97	32.42	12.29	367.05	2596.67	1971.94	1921.93	1899.71	2460.80	2301.28	300.85	93.12	549.11
18.12	79.02	20.96	0.64	2.08	0.03	0.06	35.55	285.61	5.93	0.40	1232.18	32.37	12.29	365.35	2536.05	1926.70	1878.03	1856.28	2401.60	2248.78	300.65	90.16	550.29
18.12	79.02	20.96	0.64	2.05	0.03	0.06	35.48	289.35	5.99	0.40	1246.10	32.36	12.29	364.15	2480.25	1884.73	1837.22	1815.92	2347.86	2199.94	300.85	88.00	545.34
18.12	79.02	20.96	0.62	2.01	0.02	0.06	35.52	297.15	5.97	0.39	1275.68	32.39	12.29	362.55	2416.13	1836.64	1790.50	1769.71	2285.75	2144.06	300.85	85.81	545.77
18.12	79.04	20.96	0.61	1.98	0.02	0.06	35.97	302.77	5.58	0.32	1298.09	32.52	12.29	361.55	2383.74	1812.50	1767.08	1746.54	2254.07	2116.05	300.65	85.74	548.78
18.12	79.04	20.97	0.60	1.96	0.02	0.06	36.27	307.09	5.32	0.28	1315.20	32.61	12.29	360.35	2343.38	1782.36	1737.83	1717.60	2214.71	2081.06	300.45	85.00	547.35

007- Appendix G- Stack Loss Efficiency Data/results (page 45 of 46)

SUMS					AVERAGE	SUMS						
59717.84	55251.87	17938.62	64241.51	24500.51	5523.21	90672.54	24469.48	66203.1	266692.1	24469.5	1822.5	108.7
Energy Losses (kJ/kg of Dry Fuel) Flue Gas Constituent					Total Loss Rate	Total Loss	Chemical Loss 1	Sensible and Latent Loss	Total Output	Chem Loss 2	Grams Produced	
CO	N_2	CH_4	H_2O Comb	H_2O Fuel MC							CO	HC
1089.09	1660.89	298.52	1526.31	577.44	5629.22	0.00	0	0.00	0	0	0.00	0.00
386.70	1315.37	151.86	1678.04	628.45	4591.26	11052.81	1274	9778.96	36822	1274	90.20	6.51
1637.57	2579.44	578.28	1576.04	607.88	7724.71	7174.45	2030	5144.38	11296	2030	148.09	9.59
764.80	1702.99	242.38	1590.32	599.31	5407.09	4670.39	860	3810.88	12507	860	64.45	3.74
1647.68	2026.55	599.67	1547.23	597.69	7004.87	5790.24	1836	3953.89	10648	1836	132.93	8.86
1329.16	1809.82	472.48	1555.68	595.65	6290.84	5024.74	1423	3601.66	10860	1423	103.67	6.75
733.55	897.60	225.34	1516.15	570.72	4208.00	3322.01	752	2569.69	12378	752	56.89	3.19
586.43	813.54	189.75	1528.56	573.99	3936.78	3034.76	594	2440.50	12296	594	44.37	2.62
483.00	805.53	150.16	1536.39	575.37	3794.43	3101.24	514	2587.44	13153	514	38.74	2.20
612.74	785.00	216.79	1533.54	576.92	3963.63	3202.72	665	2537.35	12867	665	48.56	3.14
434.17	807.03	128.09	1538.70	575.37	3728.05	2735.36	410	2325.77	11856	410	31.26	1.68
393.14	812.62	102.44	1537.00	573.73	3664.17	2586.40	347	2239.01	11451	347	27.24	1.30
467.01	801.97	140.54	1535.23	574.56	3761.90	2550.56	409	2141.53	10933	409	31.07	1.71
359.83	797.82	85.21	1535.70	572.57	3591.70	2101.58	259	1842.94	9535	259	20.67	0.89
322.84	796.82	47.31	1528.08	568.27	3500.61	1755.68	185	1571.17	8218	185	15.91	0.43
383.34	743.28	68.16	1518.31	565.44	3498.80	1527.30	196	1331.27	7154	196	16.46	0.53
946.81	738.38	304.56	1487.81	563.12	4255.74	1778.66	521	1258.07	6533	521	38.94	2.28
2202.74	713.02	834.34	1422.91	559.01	5933.63	2369.71	1208	1161.26	5573	1208	86.66	5.98
2140.63	692.13	800.05	1423.66	557.94	5810.08	1996.59	1007	989.56	4837	1007	72.48	4.93
1885.70	626.69	699.73	1432.33	557.34	5380.00	1798.83	862	937.28	4850	862	62.13	4.20
1424.63	609.42	503.90	1453.36	557.77	4724.10	1447.90	589	858.87	4647	589	43.02	2.77
2443.59	661.71	921.29	1406.76	556.14	6175.34	1548.57	841	707.39	3438	841	60.40	4.15
2516.79	643.48	940.08	1401.60	554.86	6237.06	1332.34	736	596.00	2916	736	53.01	3.60
2532.12	635.90	945.46	1400.41	554.60	6246.58	1334.37	741	593.59	2914	741	53.34	3.63
2112.81	758.45	757.60	1426.44	557.34	5826.38	1298.72	638	661.06	3134	638	46.41	3.03
2124.53	782.60	745.97	1426.20	556.78	5856.27	1305.39	638	667.63	3128	638	46.67	2.98
2060.37	763.78	718.81	1428.19	556.49	5742.74	1173.40	566	607.37	2890	566	41.50	2.64
2132.01	811.70	745.00	1427.18	557.13	5901.27	1096.18	533	563.55	2598	533	39.03	2.48
1505.83	1061.66	417.88	1465.60	559.09	5309.72	887.67	320	567.30	2437	320	24.80	1.25
1410.46	1070.68	368.71	1470.05	558.88	5181.16	769.93	263	506.56	2185	263	20.65	0.98
1290.26	1112.42	305.25	1476.97	559.05	5058.27	751.67	236	515.50	2204	236	18.89	0.81
1455.01	1646.34	362.42	1491.26	566.68	5986.28	945.18	285	659.80	2195	285	22.59	1.03
1542.53	1713.50	380.46	1488.15	566.21	6173.20	974.69	302	672.71	2165	302	23.95	1.08
1678.45	1757.63	426.55	1482.49	565.87	6404.72	951.76	311	640.61	2004	311	24.53	1.14
1568.33	1697.57	376.78	1485.26	564.97	6170.15	802.29	252	550.67	1784	252	20.06	0.88
1667.55	1799.98	386.58	1482.55	564.32	6405.60	773.41	247	526.64	1628	247	19.81	0.84
1635.13	2173.76	369.72	1496.95	569.13	6854.74	891.30	259	632.20	1695	259	20.89	0.86
1608.62	2290.98	330.80	1500.30	568.87	6941.80	838.15	233	605.41	1563	233	19.09	0.72
1687.93	2287.27	356.54	1495.93	568.23	7036.34	849.56	245	604.18	1552	245	20.03	0.77
1706.78	2262.81	359.84	1494.00	567.62	7024.40	913.36	267	646.20	1672	267	21.82	0.84
1701.01	2257.59	346.26	1493.60	566.94	6996.96	844.81	246	599.02	1556	246	20.19	0.75
1590.16	2267.16	288.29	1498.67	566.59	6845.39	1068.10	291	776.66	2035	291	24.40	0.81
1516.04	2258.99	248.75	1501.62	566.16	6723.91	299.76	78	221.52	587	78	6.65	0.20

007- Appendix G- Stack Loss Efficiency Data/results (page 46 of 46)

SBI Laboratories, Inc.

Manufacturer: SBI
Model: Max Caddy
Date: 01-14-10
Run: 3
Control #: 245/20712-0000121
Test Duration: 420
Output Category: 3

Technicians: _____

Test Results in Accordance with CSA B415.1-10

	HHV Basis	LHV Basis
Overall Efficiency	74.6%	80.3%
Combustion Efficiency	93.1%	93.1%
Heat Transfer Efficiency	80%	86.2%

Output Rate (kJ/h)	37 972	36 021	**(Btu/h)**
Burn Rate (kg/h)	2.56	5.64	**(lb/h)**
Input (kJ/h)	50 925	48 308	**(Btu/h)**

Test Load Weight (dry kg)	17.93	39.51	**dry lb**
MC wet (%)	18.12		
MC dry (%)	22.13		
Particulate (g)	126.34		
CO (g)	1 822		
Test Duration (h)	7.00		

Emissions	**Particulate**	**CO**
g/MJ Output	0.48	6.86
g/kg Dry Fuel	7.05	101.67
g/h	18.05	260.35
lb/MM Btu Output	1.10	15.93

Air/Fuel Ratio (A/F)	17.42

VERSION: **2.4** **2010-04-15**

COMPONENTS

ETL Mark Minimum Labeling Requirements (new Intertek Mark)

MINIMUM MARKING REQUIREMENTS FOR PRODUCTS BEARING THE ETL MARK

The ETL Listing Mark consists of the following four items:

1. The ETL Certification Mark with “US” and/or “C” as identifiers. The letter “C” adjacent and to the lower left side of the ETL Certification Mark indicates that the product complies with a Canadian standard. The letters “US” adjacent and to the lower right side of the ETL Certification Mark indicates that the product complies with a US standard. The required minimum size of the identifiers is 2 mm.
2. The word, "Listed" or "Classified" or "Recognized Component" (whichever is appropriate). The word, "Listed" is to be incorporated into the ETL Certification Mark. If upon reduction, the word “listed” is not legible as part of the trademark, it shall also appear separately.
3. The Control Number issued by Intertek Testing Services. This five to eleven digit number is unique to the manufacturing site for each applicant.
4. A standard description, which refers to the national standard used for certification shall be used. Example:

    - For US standards, the words, “Conforms to” shall appear with the standard number along with the word, “Standard” or “Std.” Example: “Conforms to ANSI/UL Std. XX.”
    - For Canadian standards, the words “Certified to CAN/CGA Standard CXX No. XX", shall be used, or abbreviated, "Cert. to CAN/CSA Std CXX No. XX".
    - If the manufacturer wishes, they may use the standard title, example “Telephone Equipment.”

Nothing selected
Nothing selected

Listing Report General Information

LISTING REPORT GENERAL INFORMATION

The Applicant have agreed to produce, test and label Intertek Listed products in accordance with the requirements of this Report. The Applicant has also agreed to notify Intertek and request authorization prior to using alternate parts, components or materials.

INSTRUCTIONS FOR USE

- One copy of this Report is submitted to the Applicant and used by the Intertek Field Representative for Follow-up Service Inspections; and
- One copy is retained in files at the Intertek Regional Certification Center.

The Applicant is to use this Report as a guide for the operation of the certification program, and will manufacture the Listed product(s) in accordance with the specifications information stated herein.

The Intertek Field Representative shall determine that the product is manufactured in accordance with this Report and that certification procedures are followed.

In the case where a discrepancy exists between the product and this Report, this Report will be considered correct, and therefore the Applicant has the responsibility for making the necessary corrections so that the product will meet the specifications stated herein.

COMPONENTS

Components used shall be those itemized in this Intertek Report covering the product, including any amendments and/or revisions.

CERTIFICATION MARK

The Intertek Certification Mark applied to the products shall either be separable in form, such as labels purchased from Intertek, or on a product nameplate or other media only as specifically authorized by Intertek. Use of the Intertek Certification Mark is subject to the control of Intertek.

MANUFACTURING AND PRODUCTION TESTS

Manufacturing and Production Tests shall be performed as required in this Report.

FOLLOW-UP SERVICE

Periodic unannounced Follow-up Service Inspections of the manufacturing facility shall be conducted by Intertek. A Follow-up Service Inspection Report shall be issued after each visit. Special attention will be given to the following:

1. Conformance of the manufactured product to the descriptions in this Report.
2. Conformance of the use of the Intertek Certification Mark with the requirements of this Report and the Intertek Certification Agreement.
3. In-plant quality control procedures and personnel.
4. Manufacturing processes and changes.
5. Performance of specified manufacturing and production tests.

In the event that the Intertek Field Representative identifies variance(s) to any provision of this Report, the Applicant shall take one or more of the following actions:

1. Correct the non-conformance.
2. Remove the Intertek Certification Mark from non-conforming product.
3. Contact the Intertek office that issued this Report for additional instructions.

GENERAL REQUIREMENTS AND DEFINITIONS

Accepted - Accepted by Intertek. All inquiries regarding change to Listed products must be presented to Intertek in writing for consideration and acceptance.

Authorized - Authorized by Intertek. All inquiries regarding change to Listed products must be

presented to Intertek in writing for consideration and approval.

C.S.A. - Canadian Standards Association.

Certified - Equipment or material included in a list published by a nationally recognized certification agency that conducts periodic inspections of production of Listed equipment or materials and whose listing stated either that the equipment or material meets recognized standards or has been tested and found suitable for use in a specified manner.

Construction Details - For specific construction details, reference should be made to the following photographs and descriptions. All dimensions are approximate unless specified as exact or within a tolerance. In addition to the specific construction details described in this Report, the following general requirements may also apply as applicable.

Discrepancy - A difference between this Report and a product described in this Report. This will result in the filing of a Variance Report on which a management level decision for the corrective action will be based.

Installation, Operating and Safety Instructions - Instructions for installation and use of this product are provided by the Manufacturer as required by the standard.

Listed - Equipment or materials included in a list published by a nationally recognized certification agency that conducts periodic inspections of production of listed equipment of materials, and whose listing states either that the equipment or materials meets nationally recognized standards, or has been tested and found suitable for use in a specified manner.

Listed Component - Identifies any product covered under the Listing or Certification service of an NRTL (US) or a CO (Canada).

Markings - The Intertek Certification Mark shall be visible after installation. Other markings may be required as identified in this Report. If evaluated to a Canadian standard, the products may be required to have markings in both French and English. If so, it is the responsibility of the Applicant to determine any such requirement and provide bilingual markings, where applicable, in accordance with the Provincial Regulatory Authorities.

N.F.P.A. - National Fire Protection Association.

Production Test Requirements - When applicable, the Manufacturer shall have the necessary test facilities to carry out production tests on the Listed product.

Products - The product as described under "Authorization to Mark" is eligible to carry the Intertek Certification Mark.

Recognized Component - Identifies any component, part or sub-assembly, covered under the recognition service of an NRTL (US) or a CO (Canada), and intended for use in Intertek Listed, Intertek Classified, or Intertek Recognized products.

Records - Records of the use of the Intertek Certification Mark must be maintained by the Applicant and must be available for review during normal business hours.

Shipping - As practically as possible, each Listed product is to be shipped completely assembled and incorporate the necessary safety and installation instructions.

Standards - The Manufacturer shall have in his possession all the current standards/specifications for the Listed product.

U.L. - Underwriters Laboratories Inc.

ULC - Underwriters' Laboratories of Canada.

Unlisted Component – Because unlisted components are uncontrolled, and they do not fall under a third party follow up program, ITS may require these components to be tested and/or evaluated at least once annually, more often for certain components, as part of the independent certification process.

Use of Mark - The Components containing the Intertek Certification Mark (i.e. ink stamps, labels) must be kept in a secure area, preferably locked and must not leave the designated manufacturing plant(s) location(s) unless authorized by Intertek. Records on the use of the mark are to be maintained up-to-date. The Intertek Certification Mark and associated product identification must be clearly visible and legible when applied to the finished product. Products to be marked must have successfully passed the production tests and scrutiny of the quality control personnel, determining that the product complies with the specifications stated in this Report. Failure to comply with procedures constitutes ground for withdrawal of Intertek authorization to use the Intertek Certification Mark.

Ordering Labels - It is the responsibility of the Applicant to ensure that an adequate stock of labels is maintained. Label quantities in stock are indicated on all packing slips issued by Intertek.

Modification Procedure - Intertek may approve modifications of a product based on an additional evaluation or tests. Fees are charged for this service. If modifications are desired, such as substituting a different material, changing the cosmetic appearance, changing the rating, altering a component to simplify the manufacturing or improve the product, or any other change, the following procedure must be followed:

1. Write the Intertek office that issued this Report requesting an evaluation of the modification required. Include a clear description and detailed drawings if required showing exactly what is involved, and state your reason for wanting to make the modifications.
2. Wait until written authorization is received from Intertek complete with additional or revised pages to be inserted into your Report. Only after written authorization is received may the Applicant proceed with the modification.

INITIAL FACTORY AUDIT

Purpose - The purpose of this audit is to ensure the following:

1. The Plant Manager, Foreman and Quality Control Personnel are familiar with this Report.
2. The Plant Quality Control Program will assure that the product is manufactured to the requirements in this Report.
3. Key personnel are familiar with and recognize the need for Follow-up Service Inspections as well as proper handling of the Intertek Certification Mark and the use of log sheets, where

applicable.
4. The duties of the Controller of the Intertek Certification Mark are properly understood.

Equipment or Supplies Needed

1. Applicable Specifications.
2. Applicable Standards.
3. Supply of log sheets where applicable.
4. Intertek Certification Mark Controller instruction sheet with sample log sheet.
5. Supply of open stock/custom labels or stamp, etc.

Initial Factory Audit Procedures - The initial inspection (pre-arranged with date and time agreeable to both the Applicant and the Intertek Field Representative) will consist of an initial meeting with the Plant Manager, Plant Foreman, Quality Control Manager and other key personnel. The initial meeting will cover a complete review of the Report and production facilities.

INTERTEK FOLLOW-UP SERVICE INSPECTIONS

The Intertek Field Representative shall determine that the product is manufactured in accordance with this Report, and that label procedures are followed.

Label Control - Record serial numbers of labels if applicable, in the plant. Inspect label log sheets. The following information should be recorded in the label log sheets by the manufacturer:

1. Label numbers, date labeled or shipped, product labeled, and destination.
2. Labels removed from, returned, freight damage, or rejected products should be picked up.

Examination of Product - At each Follow-up Service Inspection the Intertek Field Representative shall determine that the product which is intended to bear the Intertek Certification Mark is manufactured in accordance with the specified standards as per the test program and stated herein. The Intertek Field Representative shall pay special attention to the following:

1. Materials used must be free from defects that could affect the performance of the product.
2. Suitable protective packaging.
3. Complete safety and installation instructions are supplied with each product. No modification to these instructions shall be made without Intertek authorization.

Examination of Applicant's Inspection Programs - At each Follow-up Service Inspection, the Intertek Field Representative shall determine that the Applicant’s methods of inspection conform to the specifications included in the quality control procedures. The Intertek Field Representative will pay attention to:

1. The Applicant’s quality control report is complete and conforms to the procedure accepted by Intertek and included in this Report.
2. The equipment used for inspection conforms to the specification in the quality control procedure.The work area is suitable for a good quality control program.
3. Regular manufacturing production line tests are carried out by the Applicant.

Discrepancies - The Intertek Field Representative shall complete his Follow-up Service Inspection sheet detailing the discrepancy and issue a Variance Report. A signature on the Intertek Field Representative's copy shall be obtained from the Applicant's representative, giving evidence that they were issued a copy. Copies shall be forwarded to the Intertek Regional Certification Office.

The Intertek Field Representative shall require that the Applicant remove the Intertek Certification Mark from all products which do not meet the conformance requirements of this Report, and advise the Applicant not to use the Intertek Certification Mark until further advised.

In the case of minor cosmetic changes the Intertek Field Representative will note the variance on his Follow-up Services Inspection Report and determine the action to be taken by the Applicant. Actions may be to have the Applicant apply to Intertek for an evaluation of the variance and if approved, the subsequent modification of this Report, or to have the Applicant agree to correct the variance on all affected units.

On subsequent routine Follow-up Service Inspections, the Intertek Field Representative will pay special attention to any variances listed in previous Follow-up Inspection Reports. If it is found that a variance has not been corrected as agreed to by the Applicant, the Intertek Field Representative will contact Intertek Regional Certification Center for appropriate instructions. In extreme cases, service could be immediately suspended.

In the case of a difference existing between this Report and the product that could result in a safety hazard, the Intertek Field Representative will fill out a Variance Report. The determination of what constitutes a variance is left to the discretion of the Intertek Field Representative, but any modification or change that could affect the operating characteristics of a product must be reported. The action taken by Intertek will be:

1. Removal of all labels or the Intertek Certification Mark or halting the shipping of the affected product until the Applicant corrects the variance, or has an evaluation carried out by Intertek, the modification approved, and this Report updated.
2. For units already shipped, procedures must be taken per Intertek SOP 7.14.2.

ADDITIONAL REQUIREMENTS DRAWING INDEX

Intertek ETL Certification Marks

Intertek ETL Certification Marks

QUALITY CONTROL INFORMATION

Attached is the US EPA Supplemental Audit Form with referenced drawings at the end of the text document.

DRAWING INDEX

US EPA Supplemental audit form

US EPA Supplemental audit form

US EPA Minimum Requirements for QA/QC Auditing

This format is used for inspections at manufacturing facilities on New Residential Wood Heaters, New Residential Hydronic Heaters and Forced-Air Furnaces.

Inspector instructions:

- Attach this inspection supplement to the standard Intertek WH Periodic Inspection Report.
- One audit form for each Model.
- Client can be asked to disassemble components in order to check dimensions.
- Minimum annual inspection of each model certified for EPA.

IMPORTANT: Any linear dimension cannot exceed ±1/4-inch (±0.64-cm) and any cross-sectional area for air introduction or catalyst bypass gaps cannot exceed 5%.

Applicant	Stove Builder International – St-Augustin-de-Desmaures
Manufacturer	Stove Builder International – La Guadeloupe
Model	Max Caddy
Report No.	3198245MTL-001

Firebox dimensions:

Dwg #: PF01102-V01 p.1, 4	Depth	Width	Height
Specified	26 1/4	20 3/8	15 5/16 to 14 9/16 (from brick to bottom of tube)
Actual			

Compliant	Non-compliant

Fuel Door Size:

Dwg #: PF01102-V01 p.8	Width	Height
Specified	18	13 5/8
Actual		

Compliant	Non-compliant

1

US EPA Supplemental audit form (page 2 of 15)

Air introduction systems:

Dwg #: PF01102-V01 p.2, 4	Air inlet dimensions - Primary			Air inlet dimensions - Secondary	
	Size 1	Size 2	Size 3 (pilot)	Size 1	Size 2
Specified	3 x 4” x 1 ¼”	1 x 1 ½” x 1 ½”	¼” ID	2 x 2 1/8” x 1 7/8”	N/A
Actual					

Primary Air Inlet in Firebox : 2 x 3/16” ID (front pilot)
(See drawing # PF01102-V01 p.4)

Secondary Air Inlets in Firebox : 3 x 3/8” ID (rear pilot)
(See Drawing # PF01102-V01 p.5 for secondary air tube)

Method of control	

Compliant	Non-compliant

Baffles:

Dwg #: PF01102-V01 p.7	Length	Width
Specified	22 ¾”	19 ¾”
Actual		

Location	Above secondary air tube

Compliant	Non-compliant

Refractory/Insulation:

Dwg # : PF01102-V01 p.6	Length	Width	Thickness
Specified	See drawing	See drawing	1 ¼”
Actual			

Location	Inside of the firebox.

Compliant	Non-compliant

2

US EPA Supplemental audit form (page 3 of 15)

Catalyst: N/A

Dwg #:	Length	Width	Thickness
Specified			
Actual			

Location	

Compliant	Non-compliant

Catalyst Bypass: N/A

Gap tolerance when closed:	

Dwg #:	Length	Width	Area
Specified			
Actual			

Location	

Compliant	Non-compliant

Flue Gas Exit:

Dwg #: PF01102-V01 p.4	Size
Specified	6”
Actual	

Location	45 5/8” from floor to center of flue.

Compliant	Non-compliant

Door and Catalyst Bypass Gaskets:

Dwg #: PF01102-V01 p.11	Fuel Door	
	Size	Length
Specified	¾” OD	59 1/8”
Actual		

Fitment	Fiberglass rope

Compliant	Non-compliant

3

US EPA Supplemental audit form (page 4 of 15)

Outer Thermal Shielding and Thermal Coverings:

Dwg #: PF01102-V01 p.12, 13	Side Shields	
	Length	Width
Specified	45 5/16”	33 ¾”
Actual		

Dwg #: PF01102-V01 p.14	Rear Shields	
	Height	Width
Specified	31 7/16”	28 5/16”
Actual		

Compliant	Non-compliant

Fuel Feed System (Pellet or Wood Chip Models): N/A

Dwg #:	Specified	Actual
Feed Rate		
Auger Motor Design		
Power Ratings		
Auger Angle		

Compliant	Non-compliant

Forced-Air Combustion System: Combustion Fan N/A

Dwg #:	Specified	Actual
Location		
Horsepower		
Fan Blade Size		

Compliant	Non-compliant

Factory Representative:
Signed: _____
Date: _____

Intertek Representative:
Signed: _____
Date: _____

4