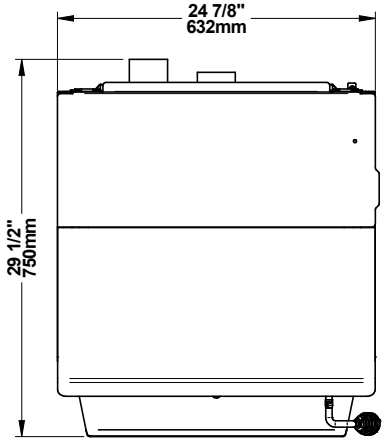
24 7/8"
632mm
29 1/2"
750mm

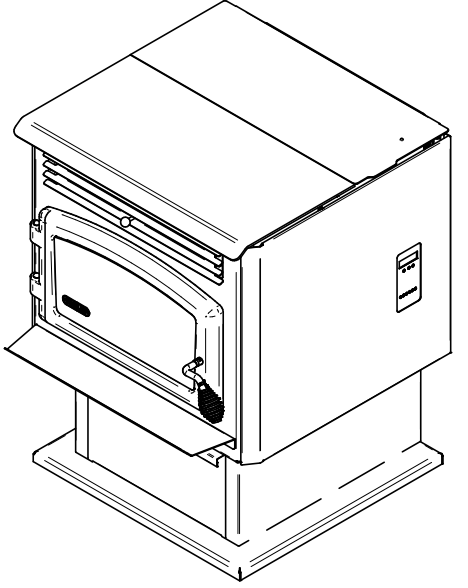

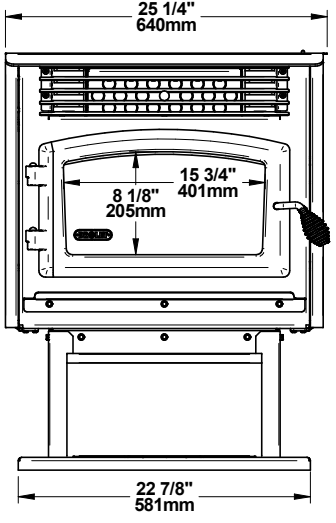
25 1/4"
640mm
15 3/4"
401mm
8 1/8"
205mm
22 7/8"
581mm

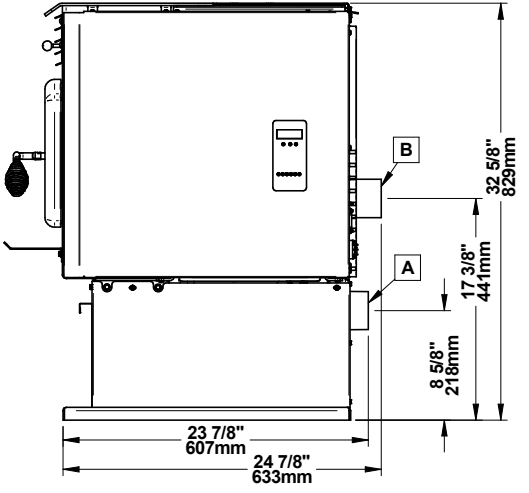
B
A
32 5/8"
829mm
17 3/8"
441mm
8 5/8"
218mm
23 7/8"
607mm
24 7/8"
633mm

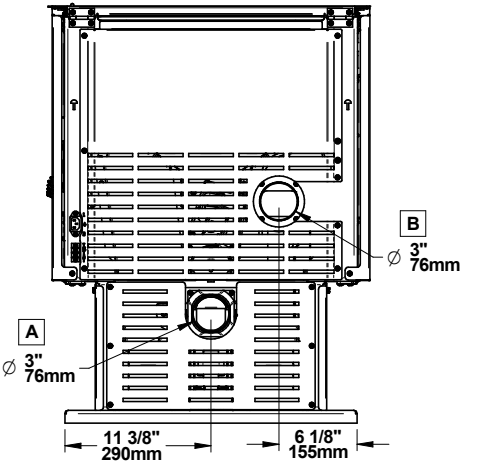
B
∅ 3"
76mm
A
∅ 3"
76mm
11 3/8"
290mm
6 1/8"
155mm