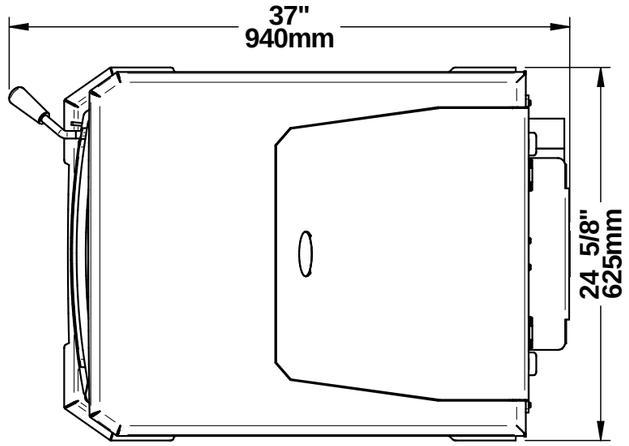
37"
940mm
24 5/8"
625mm

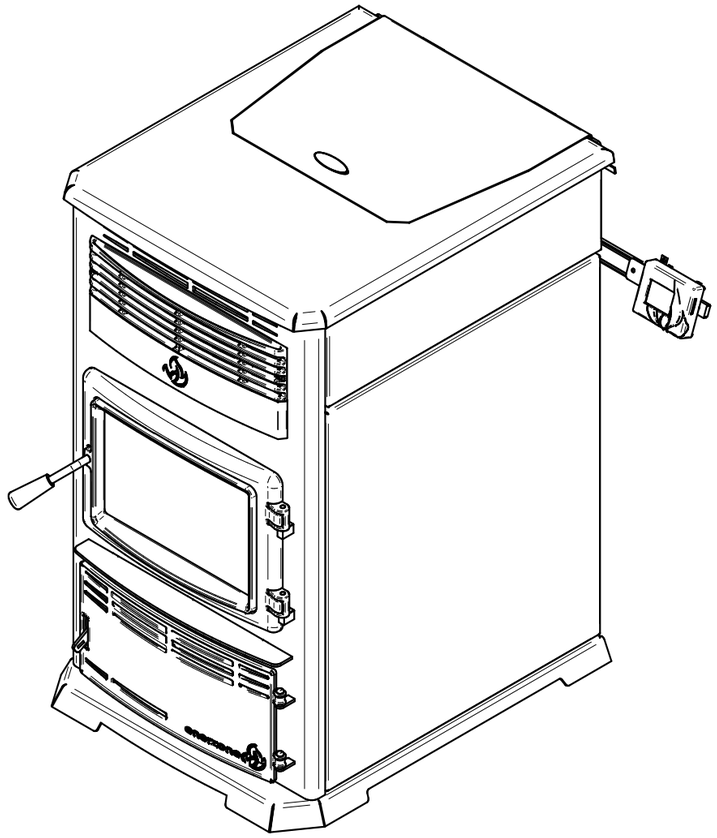

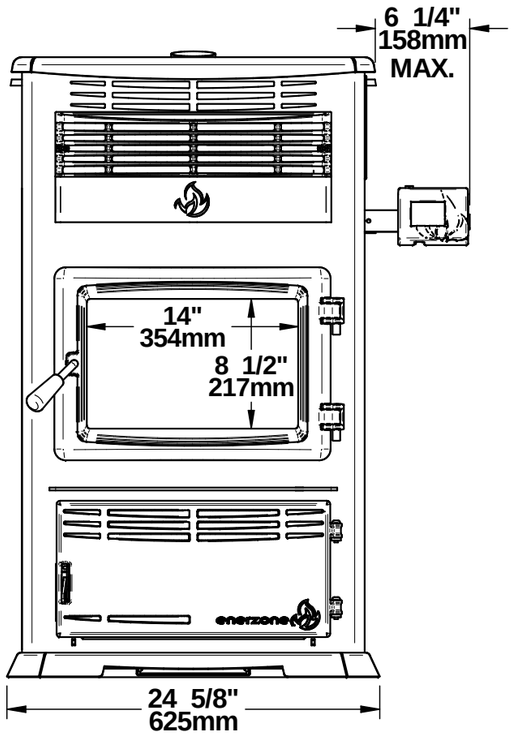
6 1/4"
158mm
MAX.
14"
354mm
8 1/2"
217mm
24 5/8"
625mm

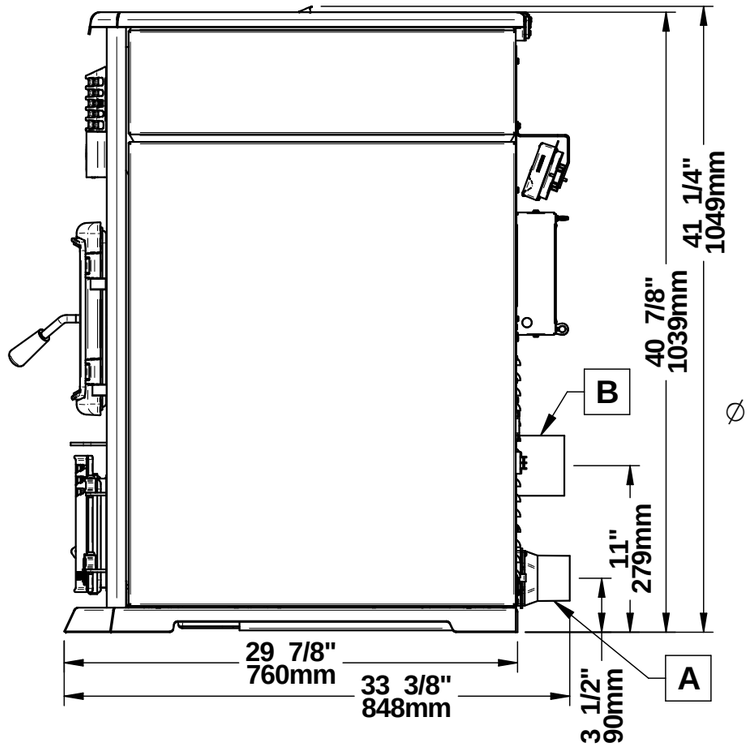
B
41 1/4"
1049mm
40 7/8"
1039mm
11"
279mm
29 7/8"
760mm
33 3/8"
848mm
3 1/2"
90mm
A

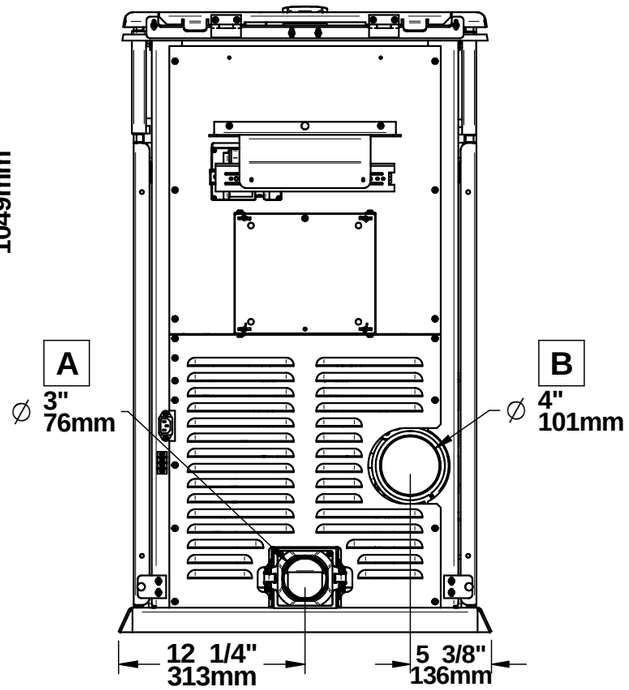
A
∅ 3"
76mm
B
∅ 4"
101mm
12 1/4"
313mm
5 3/8"
136mm